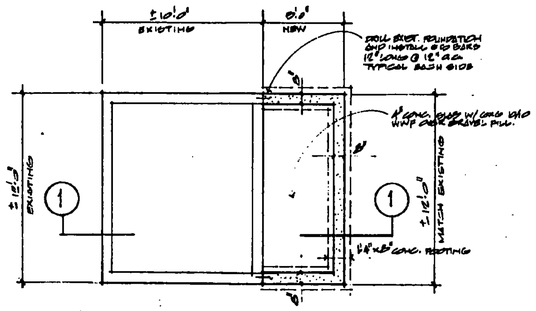


FOUNDATION PLAN

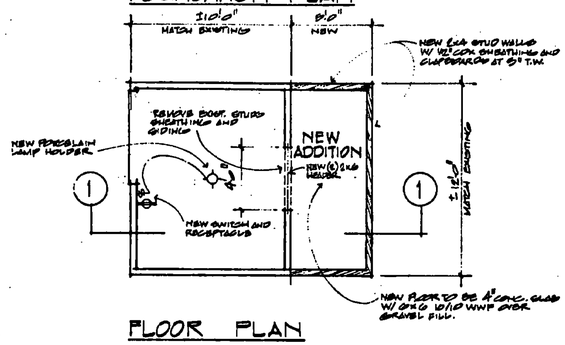


FLOOR PLAN

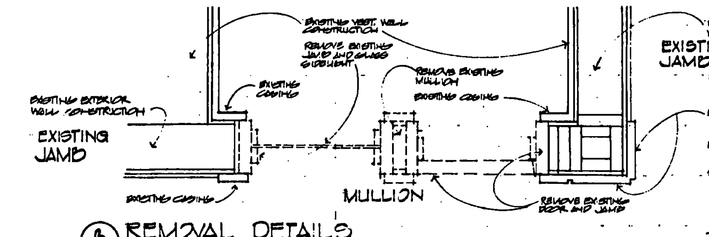


(3) REMOVAL DETAILS
EXISTING WOOD & GLASS ENTRANCES

NOTE: REMOVAL DETAILS FOR HEAD AND SILL MEMBERS SIMILAR

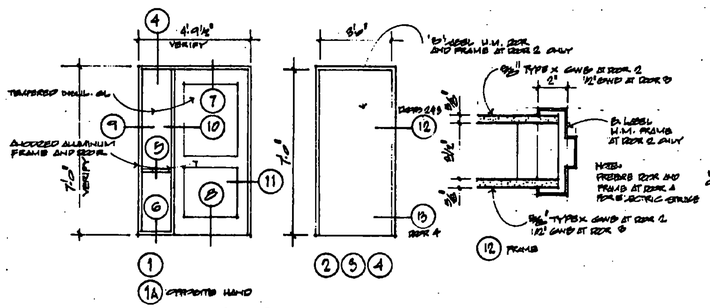


DOOR TYPES

FRAME TYPES

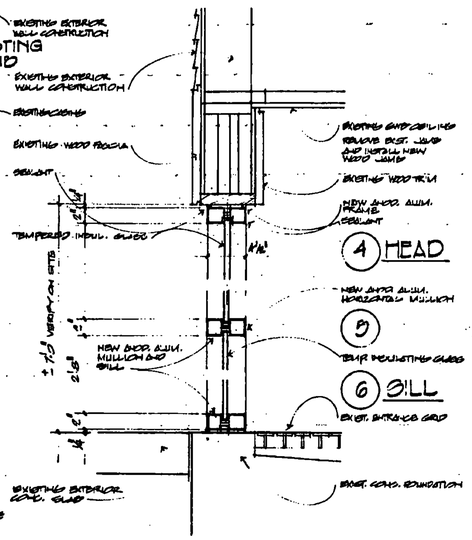

(4) HEAD

(5)

(6) SILL

SECTION AT SIDELIGHT

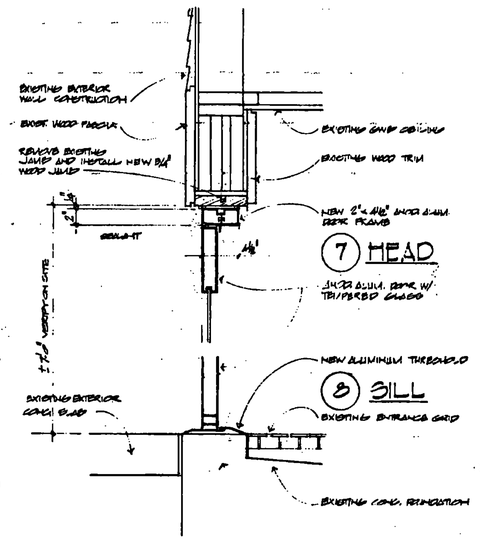

(7) HEAD

(8) SILL

SECTION AT DOOR

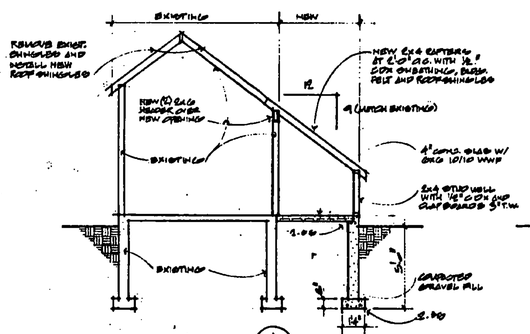

SECTION (1)

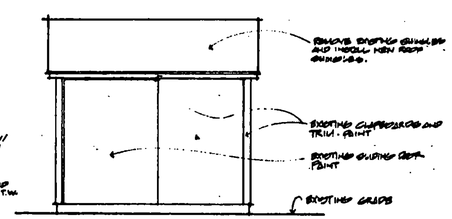

SOUTH ELEVATION

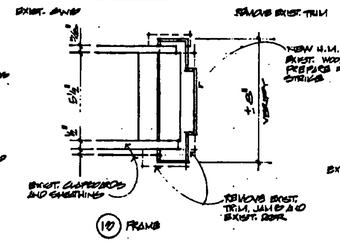

(10) FRAME

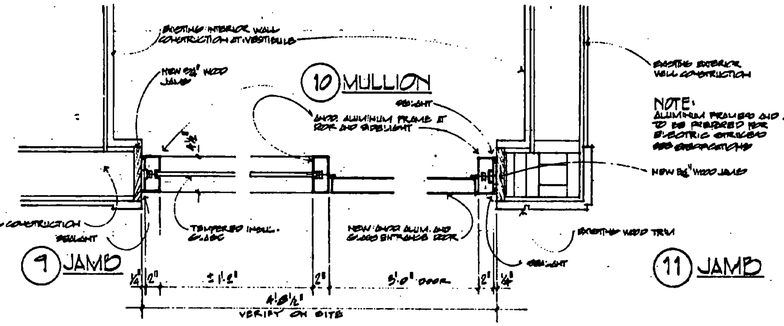

(10) MULLION

(9) JAMB

(11) JAMB

(2)
NEW ALUMINUM ENTRANCE AND SIDELIGHT DETAILS

SEE REMOVAL DETAILS ABOVE

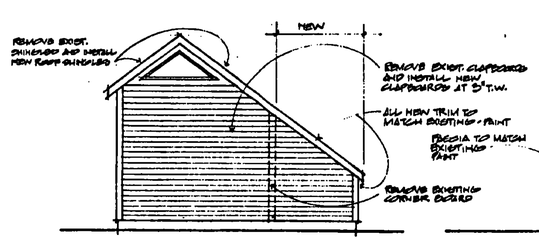

EAST ELEVATION

WEST ELEVATION SIMILAR OPPOSITE HAND

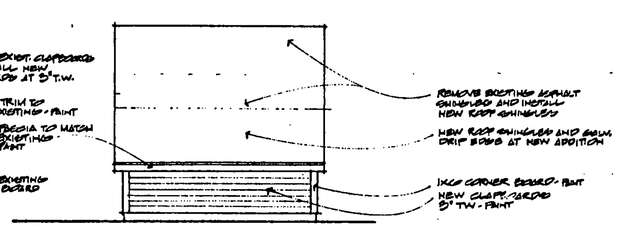

NORTH ELEVATION

ADDITION TO EXISTING STORAGE SHED


CHARLES E. METZ
ARCHITECT
THE 1820 RICHARD DOE HOUSE
NEWBURY, VERMONT 05051-0278


| | | | |
|---|---|---|---|
| PROJECT: WATERFORD | | | NO. IM-BLDG(2) |
| STATE OF VERMONT<br>DEPARTMENT OF STATE BUILDINGS<br>AGENCY OF ADMINISTRATION<br>MONTPELIER, VERMONT | | | |
| THE WATERFORD WELCOME CENTER<br>WATERFORD VERMONT<br>ADDITION TO SHED • DETAILS | | | |
| DATE: JANUARY 1990 | SCALE: AS NOTED | REVISIONS: | DWG. NO. A4 |
| DRAWN BY: | APPROVED BY: | | 8 OF 24 |