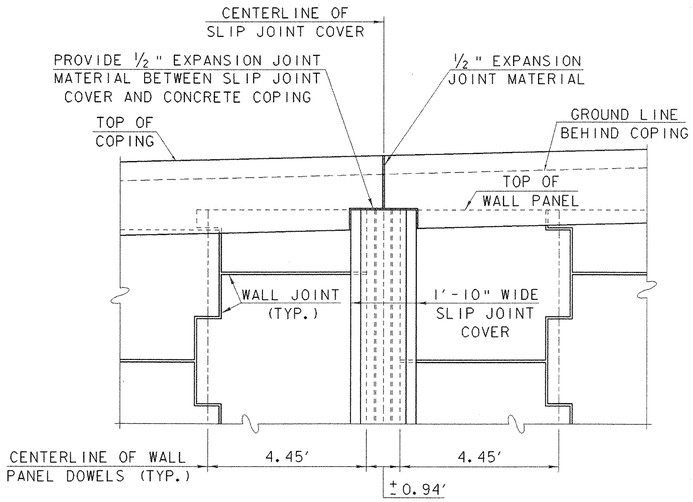

COPING OVER SLIP JOINT COVER
PARTIAL ELEVATION - FRONT FACE

SCALE: ½" = 1'-0"

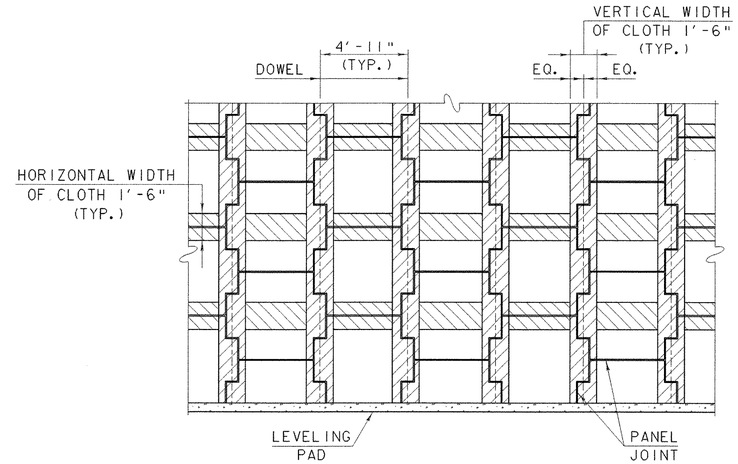

FILTER CLOTH DETAIL
PARTIAL ELEVATION - BACK FACE

SCALE: ¼" = 1'-0"

NOTE:

STRIPS OF FILTER CLOTH SHALL BE PLACED ON BACK FACE OF PANEL OVER PANEL JOINTS. FILTER CLOTH SHALL BE ADHERED TO BACK FACE OF PANELS USING AN ADHESIVE COMPOUND SUPPLIED BY THE MANUFACTURER.

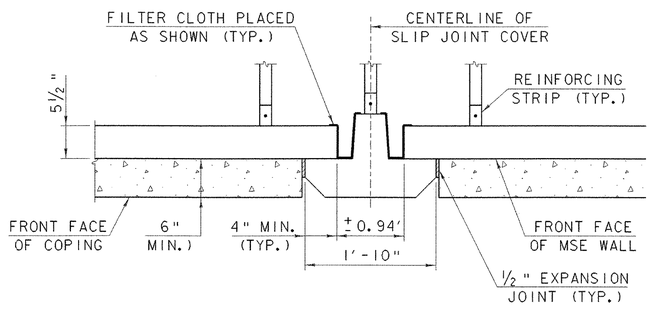

SLIP JOINT COVER PLAN DETAIL

SCALE: 1" = 1'-0"

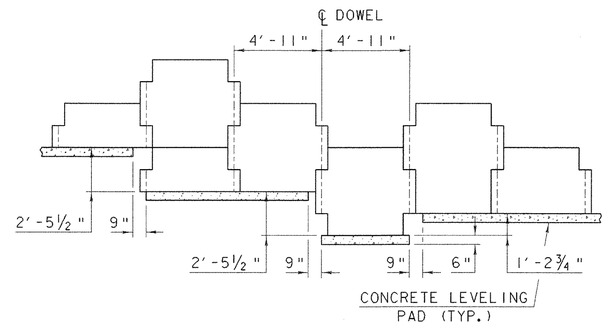

TYPICAL LEVELING PAD STEP DETAIL

SCALE: ¼" = 1'-0"

STATE OF VERMONT
AGENCY OF TRANSPORTATION

Town Of FAIRFAX-FAIRFIELD-ST. ALBANS	Bridge No. 87 N&S
Highway No. I-89	Log Sta. / Surv. Sta.
I-89 OVER VT 104	
MSE WALL DETAILS (1)	
Designed By G. ROY	Drawn By G. ROY
Checked By M. LOZIER Date 11/99	Bridge Design Supervisor R. R. WHITCOMB Date 11/99
PROJECT FAIRFAX-FAIRFIELD-ST. ALBANS	PROJECT NO. IM 089 - 3 (27)
I.G.C. Info. \96a056\Structures\sa056mse.dgn	sa056mw31
Bridge Sheet No. BR233	Sheet 111 of 370

PLOTTED 21-SEP-2000