JOB NO. 132 | DRG. NO. J1A

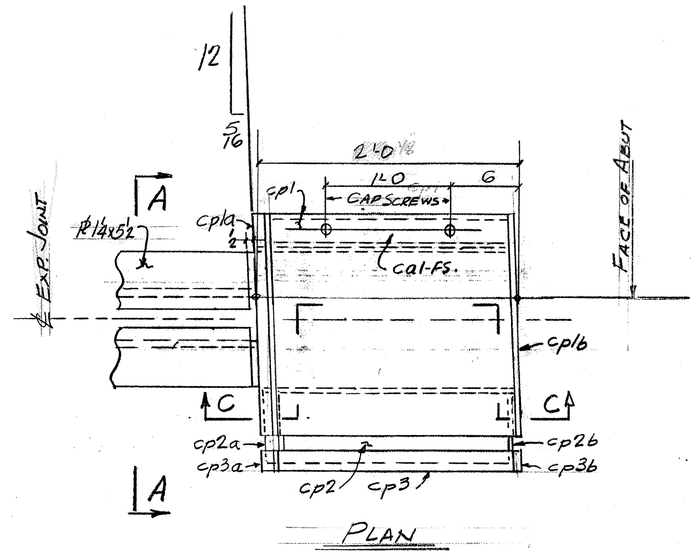

PLAN

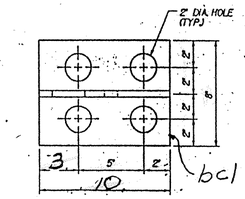

BRACKET PLAN

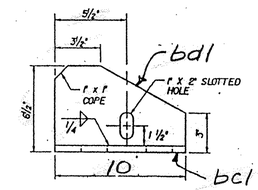

BRACKET ELEVATION

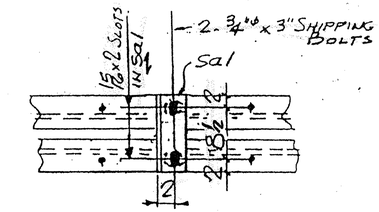

SHIPPING DEVICE
SPACED 54 O.C. MAX. (8 REQ'D)

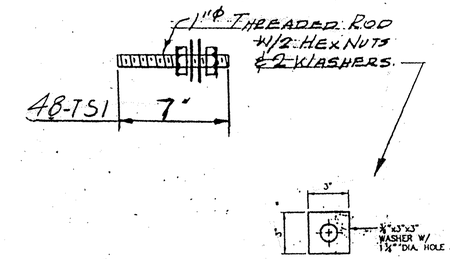

WASHER FOR BRACKET
W1

WORK THIS DWG. W/ DWG. J1

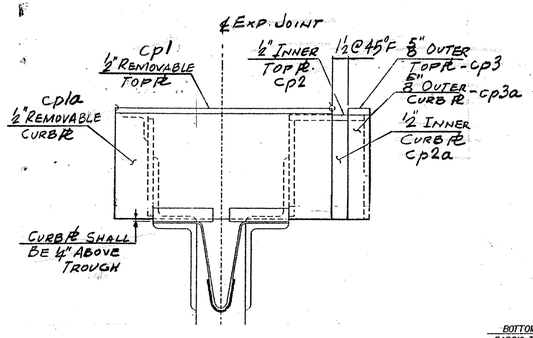

SECTION A-A

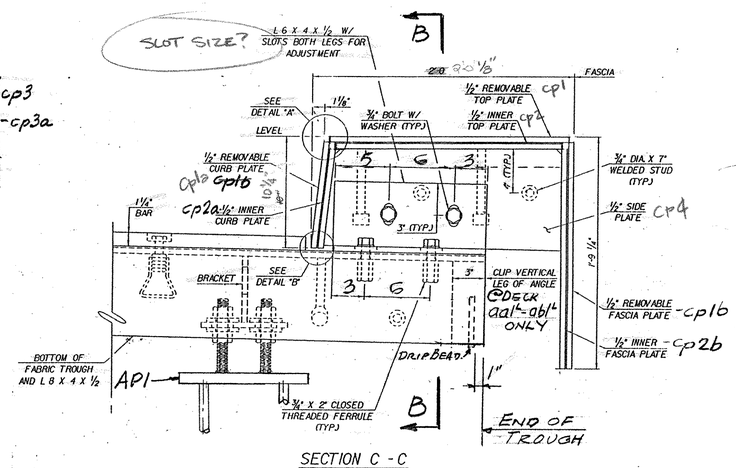

SECTION C-C

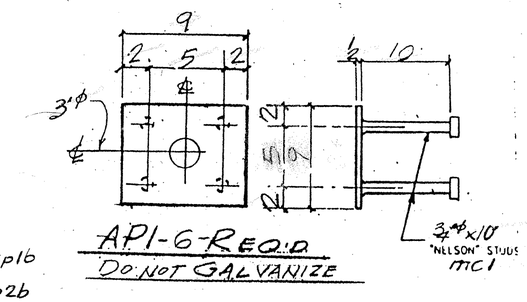

API-6 REQ'D
DO NOT GALVANIZE

RIGHT END BRUSH CURB SHOWN
LEFT END - OPP HAND.

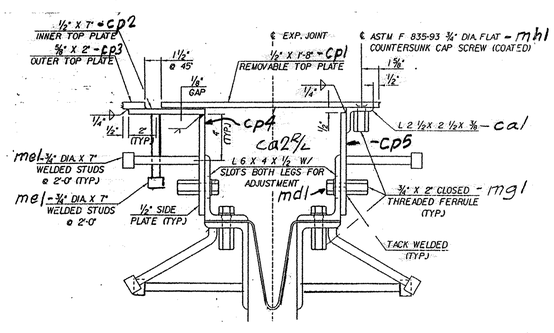

SECTION B-B

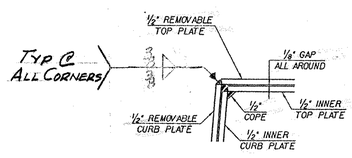

DETAIL "A"

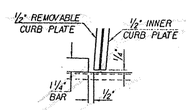

DETAIL "B"

VAOT
RECEIVED
CK'D BY SCL OK'D BY C. Ray 4-3-01
MAR 29 2001
RESUBMIT ____ APPROVED √ AS NOTED
BY mgl DATE 4-17-01

REV.	REMARKS	DATE	DWN	CHK	APP	Q.A.	NO.	DIA.	LGT	TYPE	WASHER
	OUT FOR APPROVAL	3-23-01									
	OUT FOR APPROVAL										
	ISSUED TO SHOP										
	FIELD & OFFICE										

PROJECT NO. IM-089-3(27) STATE BRIDGE NO. 88S
MATERIAL AASHTO M270 GR 50 | ELECTRODES: PER PROC. | HOLES: AS NOTED | SHOP BOLTS: 7/8" HS (M1-164)
SURFACE PREP. & PAINT:
GALVANIZED AFTER FAB. - U.N.

DESCRIPTION: EXP. JOINT - ABUT. NO. 6
JOB: BRIDGE 88S
I-89 OVER ST. ALBANS SO. STATE HIGHWAY
FAIRFAX - FAIRFIELD - ST. ALBANS, VT.
CUSTOMER: J.A. McDONALD

	DRAWN BY	DATE
	JPF	3-01
	CHKD BY	
	APPROV BY	
	Q.A.	
	JOB NO.	DRG. NO.
	132	J1A
	437	REV. A

CASCO BAY STEEL STRUCTURES, INC.
75 SPRING HILL ROAD SACO, MAINE 04072
PHONE (207) 282-7360 FAX. (207) 282-1179