JOB NO.	DRG. NO.
125-485	J1A

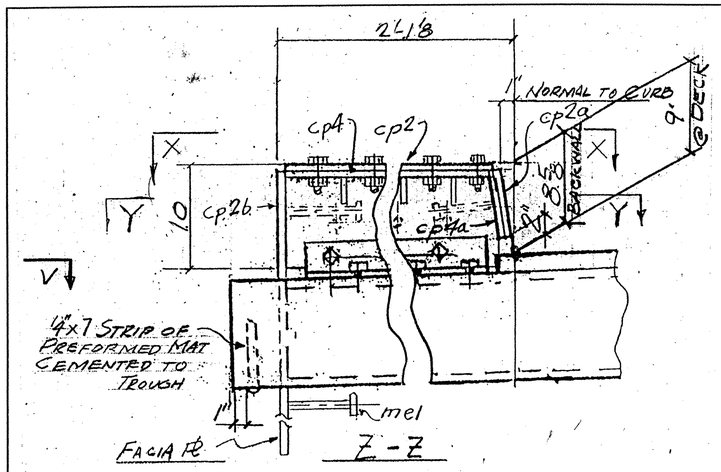

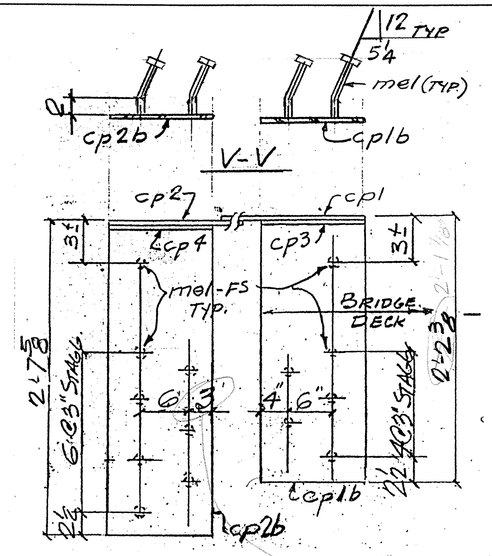

3" WILL BE OK @ NORTH FACE. HOWEVER WILL NOT PROVIDE ADEQUATE COVER @ SOUTH FACE.

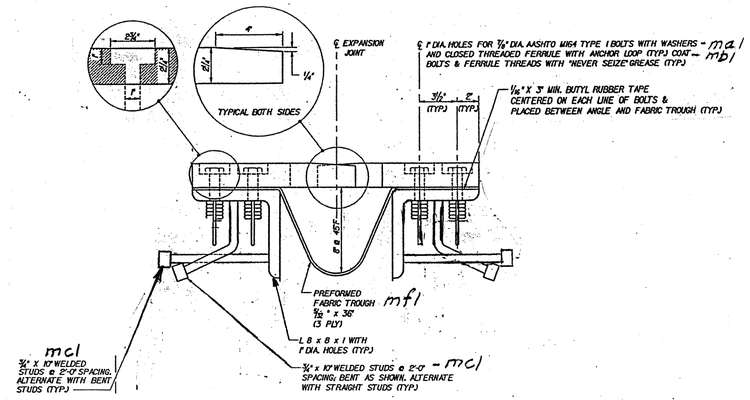

TYP. SECT. BETWEEN STRINGERS
(NORMAL TO ℄ BEARING)

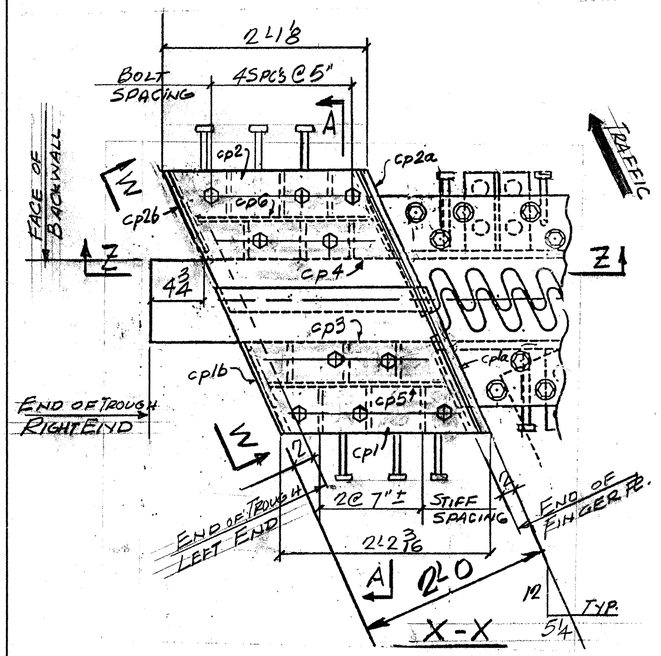

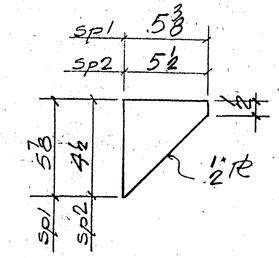

STIFF DETAILS

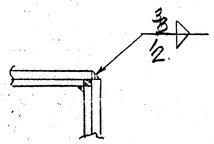

TYP. CORNER DET.

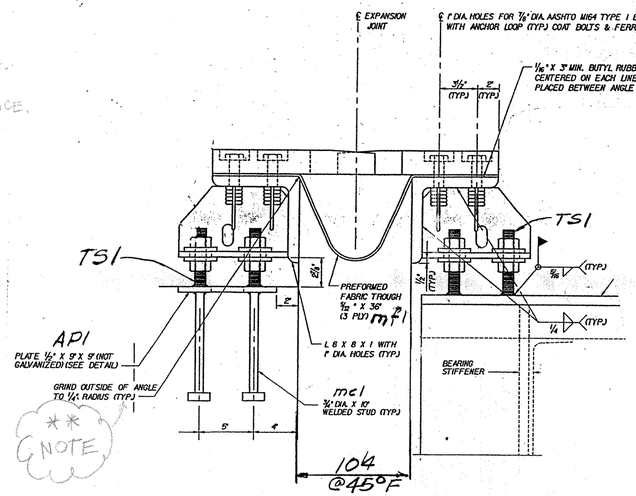

TYP. SECT. @ STRINGERS
(NORMAL TO ℄ BEARING)

TVGA
Engineering, Surveying, P.C.

☐ NO EXCEPTIONS TAKEN ☐ REJECTED
☒ FURNISH AS CORRECTED
☐ REVISE AND RESUBMIT

ENGINEER has reviewed Shop Drawings and Samples and other data which Contractor is required to submit, only for conformance with the information given in the Contract Documents and compatibility with the design concept of the completed Project as a functioning whole as indicated in the Contract Documents. Such review does not extend to means, methods, techniques, sequences or procedures of construction or in safety precautions and programs incident thereto. Contractor is responsible for dimensions to be confirmed and correlated at the job site; for information that pertains solely to the fabrication processes or to techniques of construction; and for coordination of the work of all trades.

BY: Pete W. Gill
DATE: 4/9/01

WORK THIS DWG W/ DWG J1

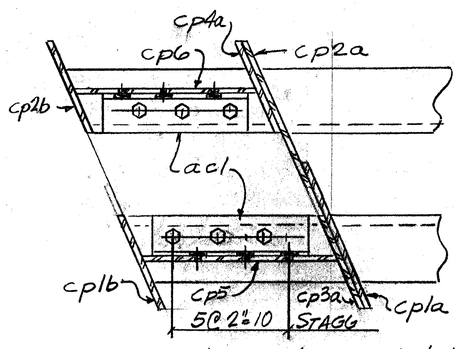

Y-Y (FINGER PL & THROUGH NOT SHOWN)
LEFT END BRUSH CURB SHOWN
RIGHT END - OPP HAND

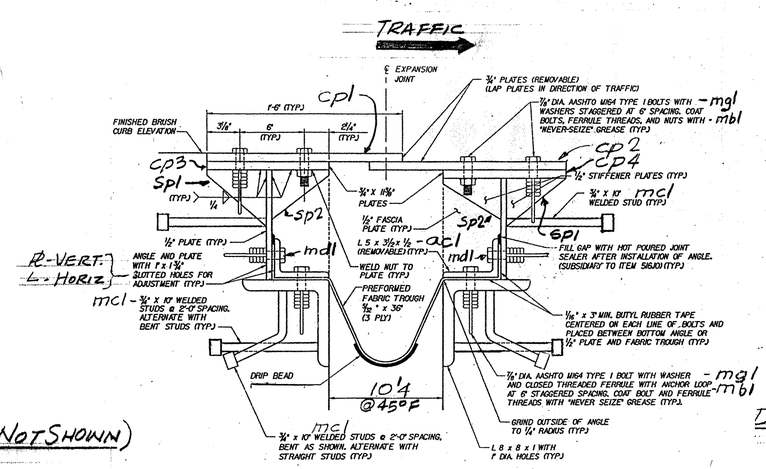

TYPICAL SECTION AT ARMORED BRUSH CURB
(NORMAL TO ℄ BEARING)

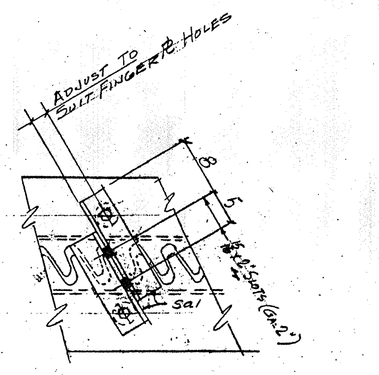

DETAIL @ SHIPPING DEVICES
SPACED 5'-0" O/C MAX. (MIN. 6 PLACES)

REV.	REMARKS	DATE	DWN	CHK	APP	Q.A.	NO.	DIA.	LGT	TYPE	WASHER
	OUT FOR APPROVAL	2-14-01									
	OUT FOR APPROVAL										
	ISSUED TO SHOP										
	FIELD & OFFICE										

PROJECT NO. IM-089-2(26) STATE BRIDGE NO. 485
MATERIAL: AASHTO M270 Gr. 36 ELECTRODES: PER PROC. HOLES: AS NOTED SHOP BOLTS: 3/4" HS.
SURFACE PREP. & PAINT:
GALVANIZED AFTER FAB. U.N.

DESCRIPTION: EXP. JOINT. - ABUT. 1
JOB: BRIDGE 485
I89 OVER LITTLE RIVER
MIDDLESEX - BOLTON, VT.
CUSTOMER: WINTERSET INC.

	DRAWN BY	DATE
	JPF	2-01
	CHKD BY	
	APPROV BY	
	Q.A.	

CASCO BAY STEEL STRUCTURES, INC.
75 SPRING HILL ROAD SACO, MAINE 04072
PHONE (207) 282-7360 FAX. (207) 282-1179

JOB NO.	DRG. NO.
125-485	J1A
	REV. △

5 of 6 I 485A