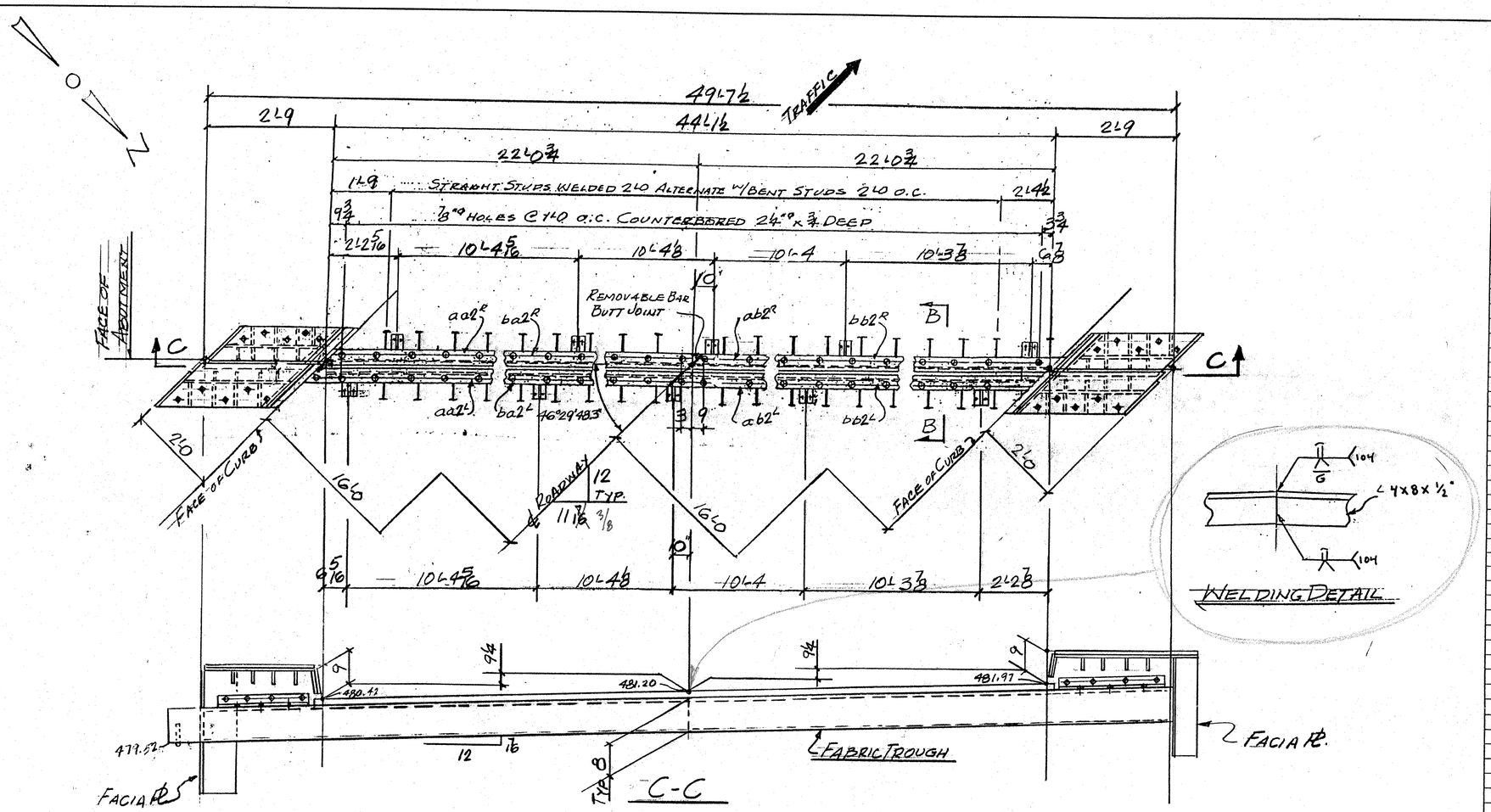

EJ2-N- ONE REQ'D (@ABUT. 2 - BRIDGE 50N)

ABM INFO PAGE	LINE	NO.	DESCRIPTION	FT	IN	ASSEM. MARK	SHIPPING MARK	REMARKS	WEIGHT
		1	EXP. JNT. ASS'Y						—
		2	L 8x4x½	25	2	aa2			
		2	DO	25	2	ab2			
		2	BAR 5½x¼	22	9	ba2			
		2	DO	22	9	bb2			
		10	PL ½x8		10	bc1			
		10	PL ½x6		10	bd1			
		88	¾"ø H.S. BOLTS		24	ma1			
		88	¾"ø CLOSED THREADED ANC. FERRULES			mb1			
		100	¾"ø ANC STUDS		10	mc1			
		1	PREFORMED FABR. BUTYL RUBBER TAPE ½x3	52	0	mf1		SPLY PER SUBSECT 707.07 AASHTO SPEC M198-TYPE II	
		2		50	0				
		20	1"ø THREADED RODS		9		TS1		
		20	DO		7		TS2		
		80	1"ø HEX NUTS						
		80	BAR 3x⅜		3	W1		WASHER	
		5	PL ½x9		9		API	NOT GALV.	
		20	¾"ø ANC. STUDS		10	mc1			
		9	L 4x4x⅜	1	0	sa1			
		9	¾"ø HS BOLTS		3			W/1 WASH	
			CURBS						
		2	PL ⅜x13½	3	8	cp1			
		2	PL ⅜x6¾	1	7	cp1a			
		2	PL ⅜x13¾	2	2¼	cp1b			
		2	PL ⅜x12½	3	5⅜	cp2			
		2	PL ⅜x6¼	1	5¾	cp2a			
		2	PL ⅜x13¾	2	6⅞	cp2b			
		2	PL ⅜x9¾	3	3¾	cp3			
		2	PL ⅜x6¼	1	1¾	cp3a			
		2	PL ⅜x9¾	3	2⅝	cp4			
		2	PL ⅜x5⅞	1	1¾	cp4a			
		2	PL ⅜x9	2	7½	cp5			
		2	PL ⅜x8⅞	2	6⅜	cp6			
		28	¾"ø H.S. BOLTS		24	ma1			
		28	¾"ø CLOSED THREADED ANC. FERRULES			mb1			
		12	¾"ø ANC STUDS		10	mc1			
		24	¾"ø H.S. BOLTS		24	md1		W/ NEW.	
		32	¾"ø ANC STUDS		7	me1			
		4	L 4x4x⅜	1	10	cc1			
		16	PL ⅜x5⅜		5⅞	sp1			
		16	PL ⅜x4		4½	sp2			

PAY ITEM 516.10

WORK THIS DWG W/ DWG. J2A

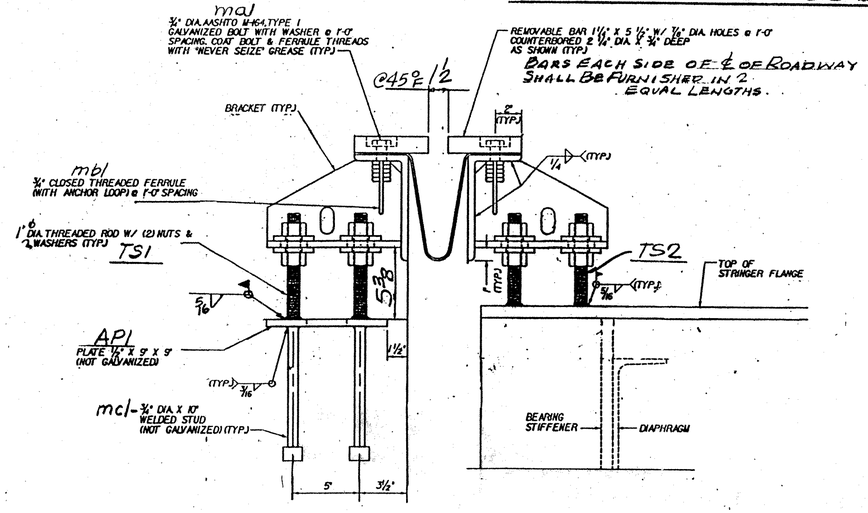

TYP. SECTION @ ADJUSTMENT BRACKETS.

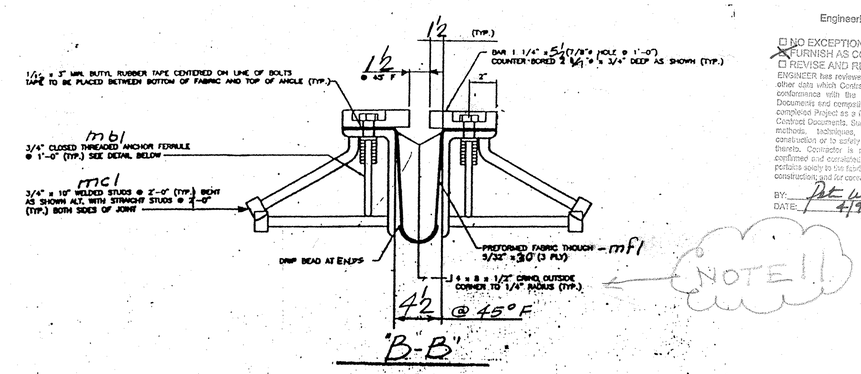

NOTE!!

PRIOR TO GALVANIZING, ALL CORNERS AND EDGES OF STEEL PLATES, SHAPES ETC., SHALL BE GROUND TO A 1/16" RADIUS.

ANCHOR FERRULE DETAIL - mb1

TVGA
Engineering, Surveying, P.C.

☐ NO EXCEPTIONS TAKEN ☐ REJECTED
☒ FURNISH AS CORRECTED
☐ REVISE AND RESUBMIT

ENGINEER has reviewed Shop Drawings and Samples and other data which Contractor is required to submit, only for conformance with the information given in the Contract Documents and compatibility with the design concept of the completed Project as a functioning whole as indicated in the Contract Documents. Such review does not extend to means, methods, techniques, sequences or procedures of construction or to safety precautions and programs incident thereto. Contractor is responsible for dimensions to be confirmed and correlated at the job site, for information that pertains solely to the fabrication processes or to techniques of construction and for coordination of the work of all trades.

BY: PEW. SEC
DATE: 4/9/01

REV.	REMARKS	DATE	DWN	CHK	APP	Q.A.	NO.	DIA.	LGT	TYPE	WASHER
OUT FOR APPROVAL		2-2-01									
OUT FOR APPROVAL											
ISSUED TO SHOP											
FIELD & OFFICE											

PROJECT NO. IM-089-2(26) STATE BRIDGE NO. 50N
MATERIAL: AASHTO M270-Gr36 ELECTRODES: PER PROC. HOLES: AS NOTED SHOP BOLTS: ¾" ø H.S.
SURFACE PREP. & PAINT:

GALVANIZED AFTER FAB

DESCRIPTION: EXP. JOINT - ABUT. 2
JOB: BRIDGE 50N

I89 OVER U.S. ROUTE 2
MIDDLESEX-BOLTON, VT.

	DRAWN BY	DATE
	JPF	1-01
	CHKD BY	
	APPROV BY	
	Q.A.	

CUSTOMER: WINTERSET INC.

CASCO BAY STEEL STRUCTURES, INC.
75 SPRING HILL ROAD SACO, MAINE 04072
PHONE (207) 282-7360 FAX (207) 282-1179

JOB NO.	DRG. NO.
127-50N	J2
	REV. △