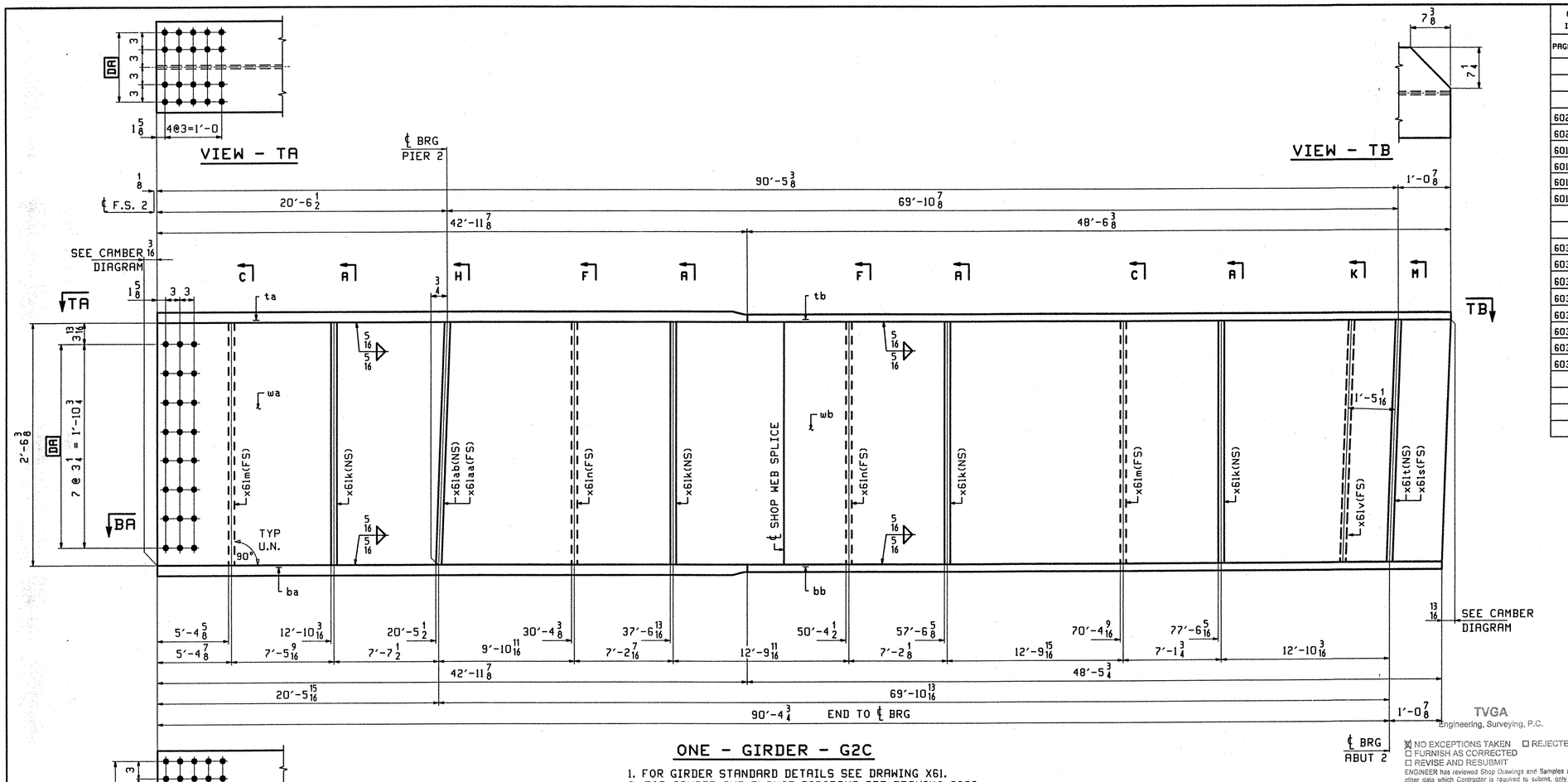


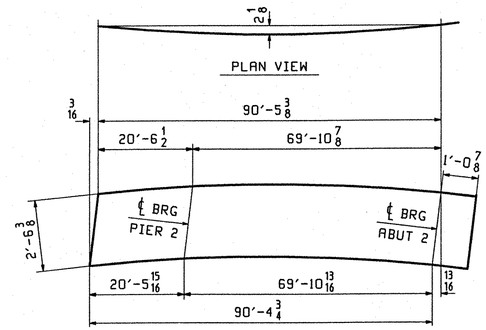


DEV. CAMBER DIAGRAM

SEE DWG. C603

## ONE - GIRDER - G2C

1. FOR GIRDER STANDARD DETAILS SEE DRAWING X61.
2. FOR CAMBER AND FLANGE DIAGRAMS SEE DRAWING C603.
2. FOR HORIZONTAL CURVING DIAGRAM SEE DRAWING HC601.
3. FOR GENERAL NOTES SEE DRAWING GN501.

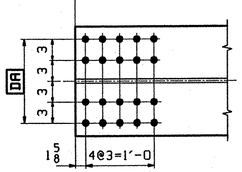


SECTION - BA

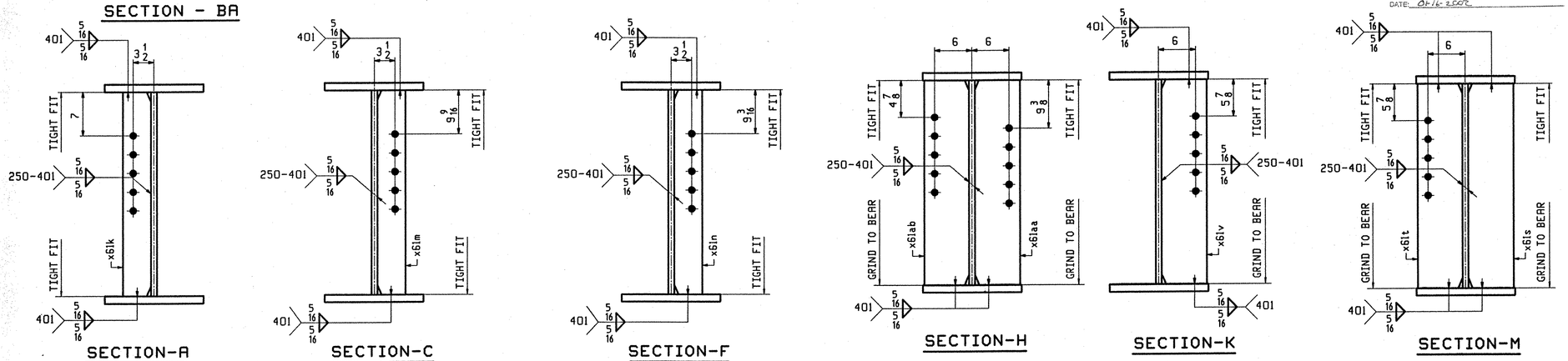


SECTION-A SECTION-C SECTION-F SECTION-H SECTION-K SECTION-M

| ABM INFO | | SHIP | BILL OF MATERIAL | | | | | | JOB NO. | DRAWING NO. | REV. |
|---|---|---|---|---|---|---|---|---|---|---|---|
| | | | | | | | | | | 612 | |
| PAGE | LINE | MARK | QTY | MARK | MATERIAL | LENGTH FT | LENGTH INCHES | REMARKS | WT | PROCUREMENT NOTES | |
| | | G2C | 1 | | GIRDER | | | | 16116 | | |
| 602 | S | | 1 | wa | PL 1/2×31 1/4 | 45 | 7 7/8 | (M270-50WT2) (H2-3) | | | |
| 602 | J | | 1 | wb | PL 1/2×31 1/2 | 45 | 10 9/16 | (M270-50WT2) (H2-3) | | | |
| 601 | A | | 1 | ta | PL 1 5/16×16 | 42 | 11 7/8 | (M270-50WT2) (H2-3) | | | |
| 601 | S | | 1 | tb | PL 7/8×16 | 48 | 6 3/8 | (M270-50WT2) (H2-3) | | | |
| 601 | A | | 1 | ba | PL 1 5/16×16 | 42 | 11 7/8 | (M270-50WT2) (H2-3) | | | |
| 601 | S | | 1 | bb | PL 7/8×16 | 48 | 5 3/4 | (M270-50WT2) (H2-3) | | | |
| 603 | N | | 2 | x61m | PL 1/2×5 | 2 | 6 3/8 | (M270-50W) | | | |
| 603 | N | | 4 | x61k | PL 1/2×5 | 2 | 6 3/8 | (M270-50W) | | | |
| 603 | M | | 1 | x61ab | PL 7/8×7 3/4 | 2 | 6 3/8 | (M270-50W) | | | |
| 603 | M | | 1 | x61aa | PL 7/8×7 3/4 | 2 | 6 3/8 | (M270-50W) | | | |
| 603 | N | | 2 | x61n | PL 1/2×5 | 2 | 6 3/8 | (M270-50W) | | | |
| 603 | M | | 1 | x61t | PL 7/8×7 3/4 | 2 | 6 3/8 | (M270-50W) | | | |
| 603 | M | | 1 | x61s | PL 7/8×7 3/4 | 2 | 6 3/8 | (M270-50W) | | | |
| 603 | M | | 1 | x61v | PL 7/8×7 3/4 | 2 | 6 3/8 | (M270-50W) | | | |

TVGA Engineering, Surveying, P.C.

☒ NO EXCEPTIONS TAKEN ☐ REJECTED
☐ FURNISH AS CORRECTED
☐ REVISE AND RESUBMIT

ENGINEER has reviewed Shop Drawings and Samples and other data which Contractor is required to submit, only for conformance with the information given in the Contract Documents and compatibility with the design concept of the completed Project as a functioning whole as indicated in the Contract Documents. Such review's do not extend to means, methods, techniques, sequences or procedures of construction or to safety precautions and programs incident thereto. Contractor is responsible for dimensions to be confirmed and correlated at the job site; for information that pertains solely to the fabrication processes or to techniques of construction; and for coordination of the work of all trades.

BY: [signature]
DATE: 09-16-2002

| REV. | REMARKS | DATE | DWN | CHK | APP | Q.A. | NO. | DIA. | LGT | TYPE | WASHER |
|---|---|---|---|---|---|---|---|---|---|---|---|
| | OUT FOR APPROVAL | 09-01 | | | | | | | | | |
| | OUT FOR APPROVAL | | | | | | | | | | |
| | ISSUED TO SHOP | | | | | | | | | | |
| | FIELD & OFFICE | | | | | | | | | | |

MATERIAL: M270 GR 50W
ELECTRODES:
HOLES: 15/16 ø (UN)
SHOP BOLTS: 7/8 ø (UN)

SURFACE PREP. & PAINT:
-STEEL WITHIN 10'-0 OF ABUT 2 SHALL BE PAINTED (SEE GN501)
-ALL OTHER STEEL SHALL BE BLAST CLEANED AND LEFT UNPAINTED.

DESCRIPTION: GIRDER - G2C

JOB: BRIDGE NO. 50N
I-89 NB OVER U.S. ROUTE 2
I-89 IMPROVEMENTS
TOWN OF MIDDLESEX-BOLTON, VERMONT

TENSOR 2108-N

PROJ NO. IM-089-2(26)

CUSTOMER: VERMONT AGENCY OF TRANSPORTATION

| | DATE |
|---|---|
| DRAWN BY | BW 09/25 |
| CHKD BY | |
| DO | 09/28 |
| APPROV BY | |
| SUPERVISOR | W. J. GATTI |
| Q.A. | |
| JOB NO. | 123-50N |
| DRG. NO. | 612 |
| REV. | △ |


CASCO BAY STEEL STRUCTURES, INC.
75 SPRING HILL ROAD SACO, MAINE 04072
PHONE (207) 282-7360 FAX. (207) 282-1179


Thu Oct 4 11:20:00 EDT 2001 /users/jobs/2108-N/612 : Rev=0