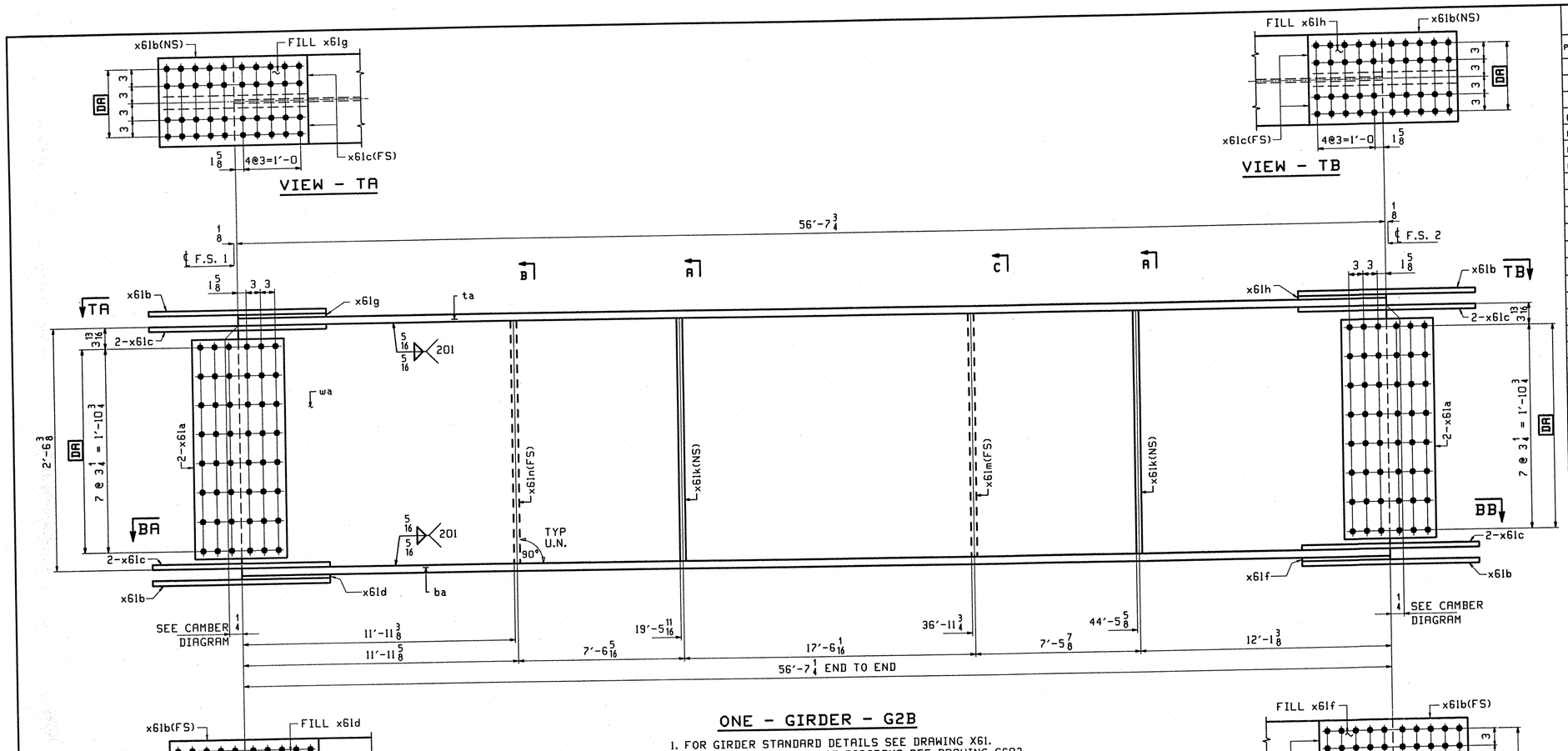

ONE - GIRDER - G2B

1. FOR GIRDER STANDARD DETAILS SEE DRAWING X61.
2. FOR CAMBER AND FLANGE DIAGRAMS SEE DRAWING C602.
2. FOR HORIZONTAL CURVING DIAGRAM SEE DRAWING HC601.
3. FOR GENERAL NOTES SEE DRAWING GN501.

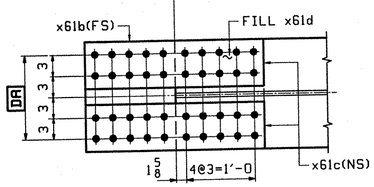

SECTION - BA

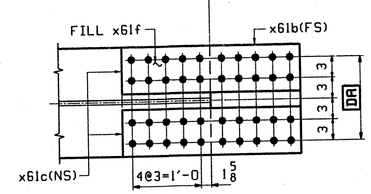

SECTION - BB

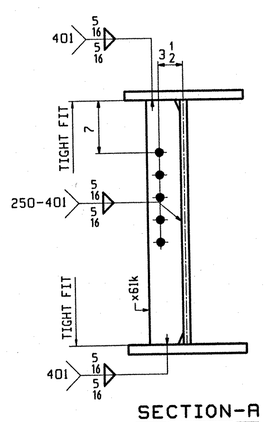

SECTION-A

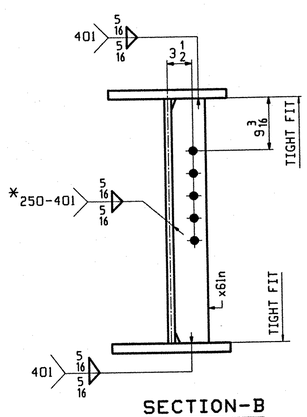

SECTION-B

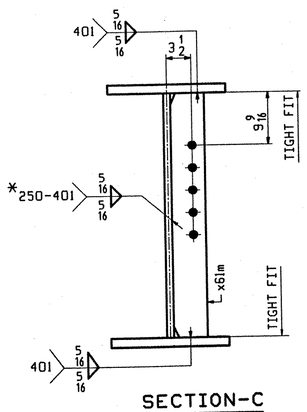

SECTION-C

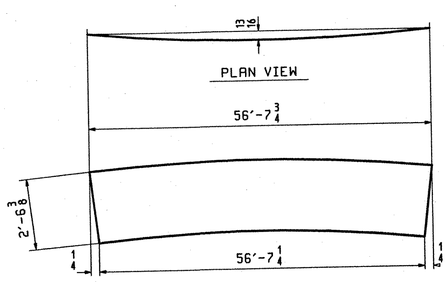

DEV. CAMBER DIAGRAM
SEE DWG C602

ABM INFO		SHIP	BILL OF MATERIAL					JOB NO.	DRAWING NO.	REV.
									607	
PAGE	LINE	MARK	QTY	MARK	MATERIAL	LENGTH FT	LENGTH INCHES	REMARKS	WT	PROCUREMENT NOTES
		G2B	1		GIRDER				10019	
602	A		1	wa	PL 1/2x32 5/16	56	7 3/4	(M270-50WT2) (H2-3)		
601	L		1	ta	PL 7/8x16	56	7 3/4	(M270-50WT2) (H2-3)		
601	E		1	ba	PL 1x16	56	7 1/4	(M270-50WT2) (H2-3)		
603	B		4	x61a	PL 1/2x26 1/4	1	7	(M270-50WT2) (H2-3)		
603	C		4	x61b	PL 5/8x16	2	7	(M270-50WT2) (H2-3)		
603	D		8	x61c	PL 5/8x7	2	7	(M270-50WT2) (H2-3)		
603	H		1	x61d	PL 1/4x16	1	3 3/8	(M270-50W) FILL		
603	J		1	x61f	PL 5/16x16	1	3 3/8	(M270-50W) FILL		
603	F		1	x61g	PL 3/8x16	1	3 3/8	(M270-50W) FILL		
603	G		1	x61h	PL 7/16x16	1	3 3/8	(M270-50W) FILL		
603	N		1	x61n	PL 1/2x5	2	6 3/8	(M270-50W)		
603	N		2	x61k	PL 1/2x5	2	6 3/8	(M270-50W)		
603	N		1	x61m	PL 1/2x5	2	6 3/8	(M270-50W)		

TVGA
Engineering, Surveying, P.C.

☒ NO EXCEPTIONS TAKEN ☐ REJECTED
☐ FURNISH AS CORRECTED
☐ REVISE AND RESUBMIT

ENGINEER has reviewed Shop Drawings and Samples and other data which Contractor is required to submit, only for conformance with the information given in the Contract Documents and compatibility with the design concept of the completed Project as a functioning whole as indicated in the Contract Documents. Such review shall not relieve the owners, machines, techniques, equipment or organization of construction or to safety precautions and programs incident thereto. Contractor is responsible for dimensions to be confirmed and correlated at the job site; for information that pertains solely to the fabrication processes or to techniques of construction; and for coordination of the work of all trades.

BY: [illegible]
DATE: 09-16-2002

OUT FOR APPROVAL	10-9-01									
OUT FOR APPROVAL										
ISSUED TO SHOP										
FIELD & OFFICE										
REV.	REMARKS	DATE	DWN	CHK	APP	Q.A.	NO.	DIA.	LGT	TYPE	WASHER

MATERIAL: M270 GR 50W
ELECTRODES:
HOLES: 15/16 ø (UN)
SHOP BOLTS: 7/8 ø (UN)

SURFACE PREP. & PAINT:
-STEEL WITHIN 10'-0 OF ABUT 2 SHALL BE PAINTED (SEE GN501)
-ALL OTHER STEEL SHALL BE BLAST CLEANED AND LEFT UNPAINTED.

DESCRIPTION: GIRDER - G2B

JOB: BRIDGE NO. 50N
I-89 NB OVER U.S. ROUTE 2
I-89 IMPROVEMENTS
TOWN OF MIDDLESEX-BOLTON, VERMONT

TENSOR 2108-N

PROJ NO. IM-089-2(26)

CUSTOMER: VERMONT AGENCY OF TRANSPORTATION

DRAWN BY	DATE
BW	09/25
CHKD BY	
DO	09/28
APPROV BY	
SUPERVISOR	W. J. GATTI
Q.A.	

CASCO BAY STEEL STRUCTURES, INC.
75 SPRING HILL ROAD SACO, MAINE 04072
PHONE (207) 282-7360 FAX. (207) 282-1179

JOB NO.	DRG. NO.
123-50N	607
	REV. △

Thu Oct 4 14:17:34 EDT 2001 /users/jobs/2108-N/607 : Rev0