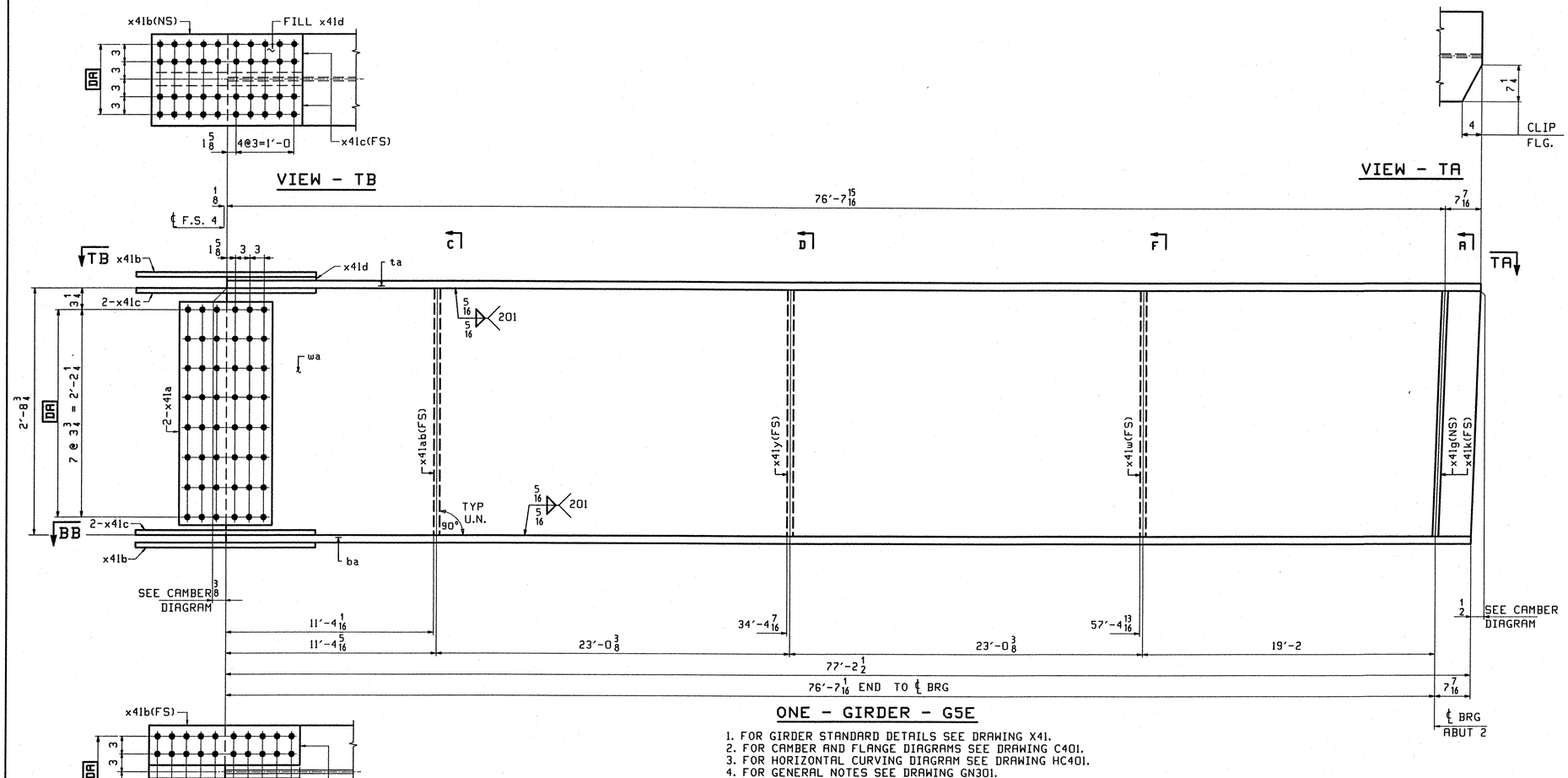

ONE - GIRDER - G5E

1. FOR GIRDER STANDARD DETAILS SEE DRAWING X41.
2. FOR CAMBER AND FLANGE DIAGRAMS SEE DRAWING C401.
3. FOR HORIZONTAL CURVING DIAGRAM SEE DRAWING HC401.
4. FOR GENERAL NOTES SEE DRAWING GN301.

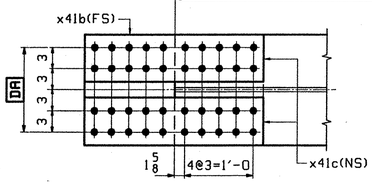

SECTION - BB

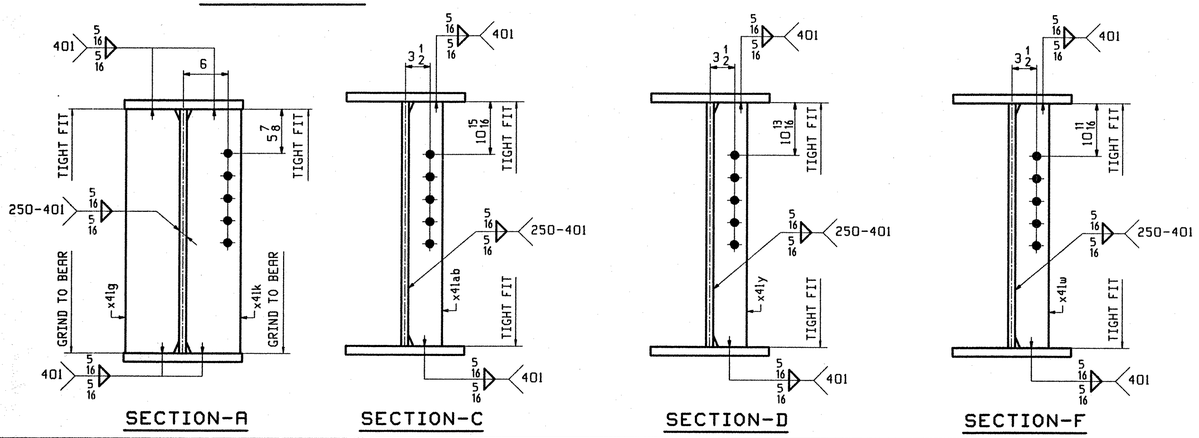

SECTION-A SECTION-C SECTION-D SECTION-F

ABM INFO		SHIP	BILL OF MATERIAL						JOB NO.	DRAWING NO.	REV.
										425	
PAGE	LINE	MARK	QTY	MARK	MATERIAL	LENGTH FT	LENGTH INCHES	REMARKS	WT	PROCUREMENT NOTES	
		G5E	1		GIRDER				16041		
401	L		1	wa	PL 1/2x36 7/16	77	3 3/8	(M270-50WT2) (H2-3)			
401	G		1	ta	PL 7/8x16	77	3 3/8	(M270-50WT2) (H2-3)			
401	A		1	ba	PL 1 5/8x16	77	2 1/2	(M270-50WT2) (H2-3)			
402	B		2	x41a	PL 1/2x29 3/4	1	7	(M270-50WT2) (H2-3)			
402	C		2	x41b	PL 5/8x16	2	7	(M270-50WT2) (H2-3)			
402	D		4	x41c	PL 5/8x7	2	7	(M270-50WT2) (H2-3)			
402	F		1	x41d	PL 3/4x16	1	3 3/8	FILL			
402	M		1	x41ab	PL 1/2x5	2	8 3/4				
402	M		1	x41y	PL 1/2x5	2	8 3/4				
402	M		1	x41w	PL 1/2x5	2	8 3/4				
402	K		1	x41g	PL 7/8x7 3/4	2	8 3/4				
402	K		1	x41k	PL 7/8x7 3/4	2	8 3/4				

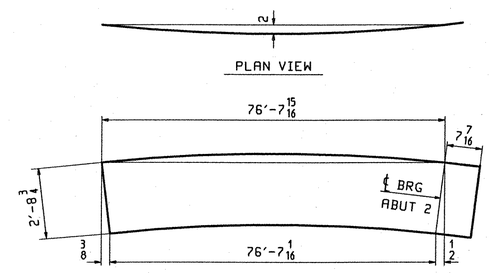

DEV. CAMBER DIAGRAM

REV.	REMARKS	DATE	DWN	CHK	APP	Q.A.	NO.	DIA.	LGT	TYPE	WASHER
	OUT FOR APPROVAL	10-03-01									
	OUT FOR APPROVAL										
	ISSUED TO SHOP										
	FIELD & OFFICE										

MATERIAL: M270 GR. 50W (UN)

ELECTRODES:

HOLES: 15/16 ø (U.N.)

SHOP BOLTS: 7/8 ø (U.N.)

SURFACE PREP. & PAINT:
- STEEL WITHIN 10'-0 OF ABUT. 2 SHALL BE PAINTED (SEE GN301)
- ALL OTHER STEEL SHALL BE BLAST CLEANED AND LEFT UNPAINTED.

TVGA
Engineering, Surveying, P.C.

☒ NO EXCEPTIONS TAKEN ☐ REJECTED
☐ FURNISH AS CORRECTED
☐ REVISE AND RESUBMIT

ENGINEER has reviewed Shop Drawings and Samples and other data which Contractor is required to submit, only for conformance with the information given in the Contract Documents and compatibility with the design concept of the completed Project as a functioning whole as indicated in the Contract Documents. Such reviews do not extend to means, methods, techniques, sequences or procedures of construction or to safety precautions and programs incident thereto. Contractor is responsible for dimensions to be confirmed and correlated at the job site; for information that pertains solely to the fabrication processes or to techniques of construction; and for coordination of the work of all trades.

BY: [signature]
DATE: 01-16-2002

DESCRIPTION: GIRDER - G5E	DRAWN BY	DATE
JOB: I-89 NB OVER LITTLE RIVER	BW	08/04
I-89 IMPROVEMENTS	CHKD BY	
BETWEEN TOWNS OF MIDDLESEX & BOLTON	ELC	9/13/01
COUNTY OF WASHINGTON VERMONT	APPROV BY	
TENSOR 2107-N	SUPERVISOR	W. J. GATTI
PROJ NO. IM-089-2(26)	Q.A.	
CUSTOMER: VERMONT AGENCY OF TRANSPORTATION		

CASCO BAY STEEL STRUCTURES, INC.
75 SPRING HILL ROAD SACO, MAINE 04072
PHONE (207) 282-7360 FAX. (207) 282-1179

JOB NO.	DRG. NO.
119-48N	425
	REV. △

Thu Sep 20 14:02:26 EDT 2001 /users/jake/2107-N/425 : Rev0