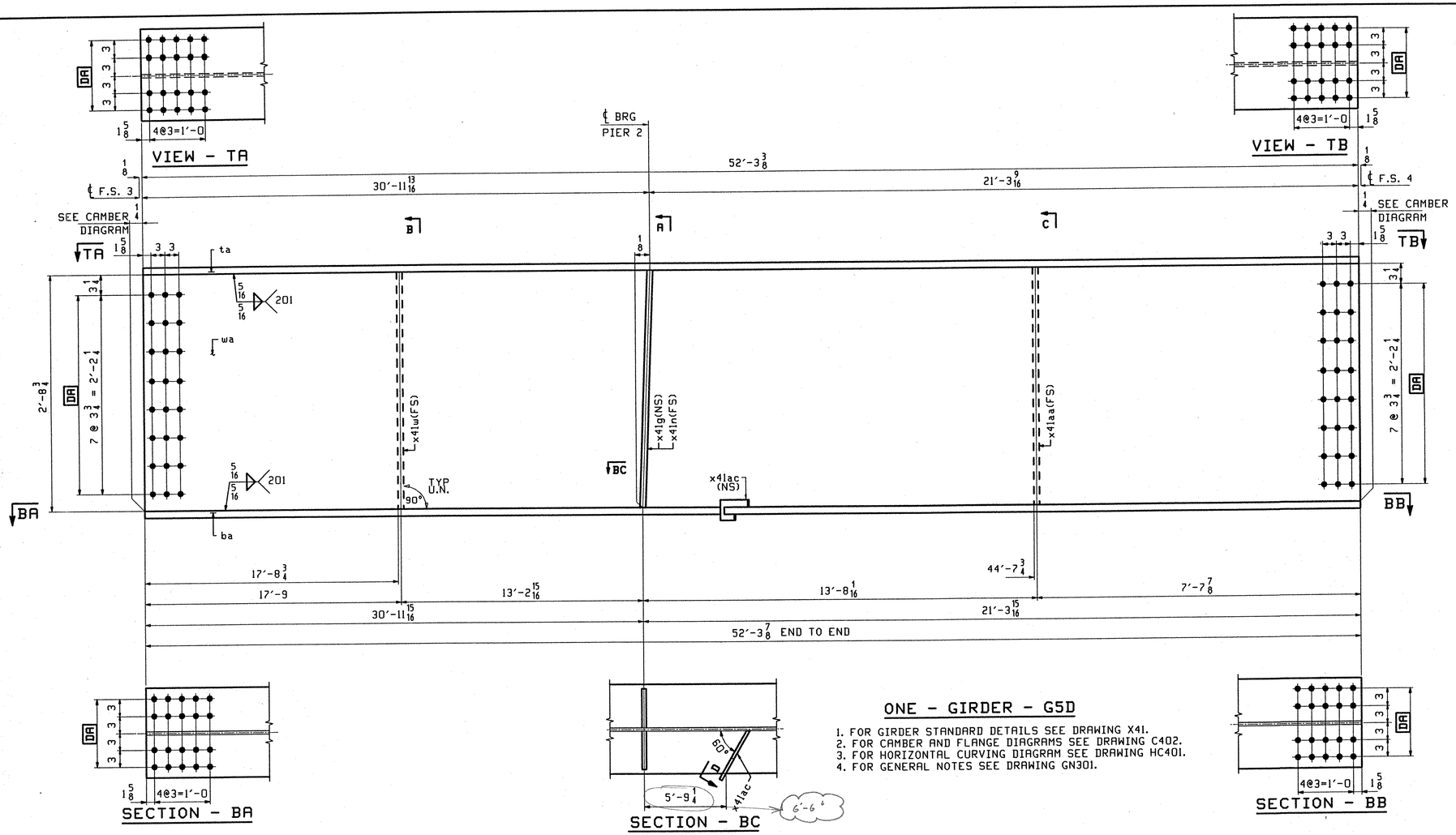

ONE - GIRDER - G5D

1. FOR GIRDER STANDARD DETAILS SEE DRAWING X41.
2. FOR CAMBER AND FLANGE DIAGRAMS SEE DRAWING C402.
3. FOR HORIZONTAL CURVING DIAGRAM SEE DRAWING HC401.
4. FOR GENERAL NOTES SEE DRAWING GN301.

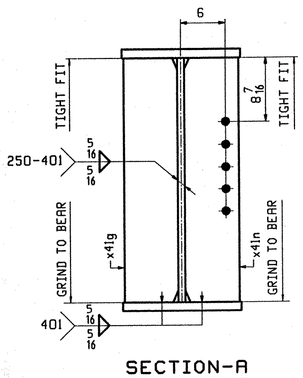

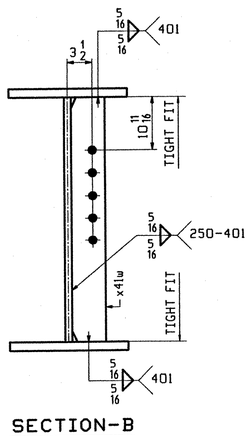

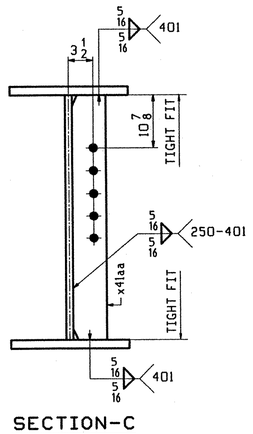

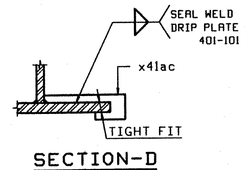

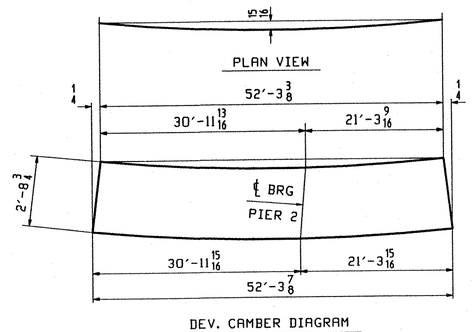

ABM INFO PAGE	LINE	SHIP MARK	QTY	MARK	MATERIAL	LENGTH FT	LENGTH INCHES	REMARKS	WT	PROCUREMENT NOTES
		G5D	1		GIRDER				12479	
401	N		1	wa	PL 1/2x34 1/4	52	3 7/8	(H270-50WT2) (H2-3)		
401	C		1	ta	PL 1 5/8x16	52	3 3/8	(H270-50WT2) (H2-3)		
401	C		1	ba	PL 1 5/8x16	52	3 7/8	(H270-50WT2) (H2-3)		
402	M		1	x41w	PL 1/2x5	2	8 3/4			
402	K		1	x41g	PL 7/8x7 3/4	2	8 3/4			
402	K		1	x41n	PL 7/8x7 3/4	2	8 3/4			
402	M		1	x41aa	PL 1/2x5	2	8 3/4			
402	P		1	x41ac	PL 1/4x3 5/8	0	10 15/16			

JOB NO.: | DRAWING NO.: 420 | REV.:

TVGA
Engineering, Surveying, P.C.

☐ NO EXCEPTIONS TAKEN ☐ REJECTED
☒ FURNISH AS CORRECTED
☐ REVISE AND RESUBMIT

ENGINEER has reviewed Shop Drawings and Samples and other data which Contractor is required to submit, only for conformance with the information given in the Contract Documents and compatibility with the design concept of the completed Project as a functioning whole as indicated in the Contract Documents. Such reviews do not extend to means, methods, techniques, sequences or procedures of construction or to safety precautions and programs incident thereto. Contractor is responsible for dimensions to be confirmed and correlated at the job site; for information that pertains solely to the fabrication processes or to techniques of construction; and for coordination of the work of all trades.

BY: [illegible]
DATE: 01-11-2002

OUT FOR APPROVAL	10-05-01									
OUT FOR APPROVAL										
ISSUED TO SHOP										
FIELD & OFFICE										
REV.	REMARKS	DATE	DWN	CHK	APP	Q.A.	NO.	DIA.	LGT	TYPE	WASHER

MATERIAL: M270 GR. 50W (UN)
ELECTRODES:
HOLES: 15/16 ø (U.N.)
SHOP BOLTS: 7/8 ø (U.N.)

SURFACE PREP. & PAINT:
- STEEL WITHIN 10'-0 OF ABUT. 2 SHALL BE PAINTED (SEE GN301)
- ALL OTHER STEEL SHALL BE BLAST CLEANED AND LEFT UNPAINTED.

DESCRIPTION: GIRDER - G5D

JOB: I-89 NB OVER LITTLE RIVER
I-89 IMPROVEMENTS
BETWEEN TOWNS OF MIDDLESEX & BOLTON
COUNTY OF WASHINGTON VERMONT

TENSOR 2107-N

PROJ NO. IM-089-2(26)

CUSTOMER: VERMONT AGENCY OF TRANSPORTATION

DRAWN BY	BW
DATE	08/03
CHKD BY	
ELC	9/13/01
APPROV BY	
SUPERVISOR	W. J. GATTI
Q.A.	
JOB NO.	119-48N
DRG. NO.	420
REV.	△

CASCO BAY STEEL STRUCTURES, INC.
75 SPRING HILL ROAD SACO, MAINE 04072
PHONE (207) 282-7360 FAX. (207) 282-1179

ELC Thu Sep 20 10:49:58 EDT 2001 /users/jobs/2107-N/420.1 Rev0