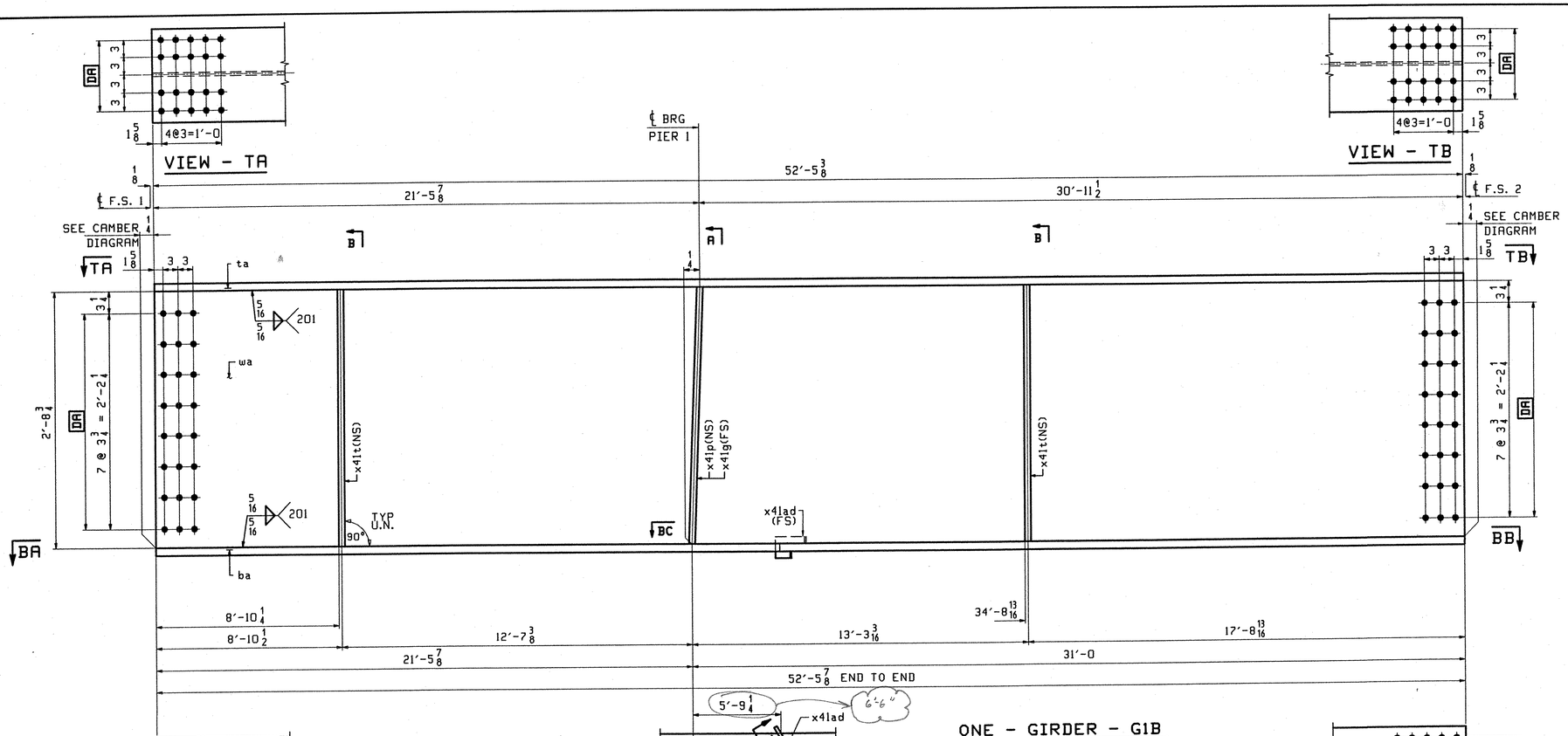

ONE - GIRDER - G1B

1. FOR GIRDER STANDARD DETAILS SEE DRAWING X41.
2. FOR CAMBER AND FLANGE DIAGRAMS SEE DRAWING C402.
3. FOR HORIZONTAL CURVING DIAGRAM SEE DRAWING HC401.
4. FOR GENERAL NOTES SEE DRAWING GN301.

SECTION - BA

SECTION - BC

SECTION - BB

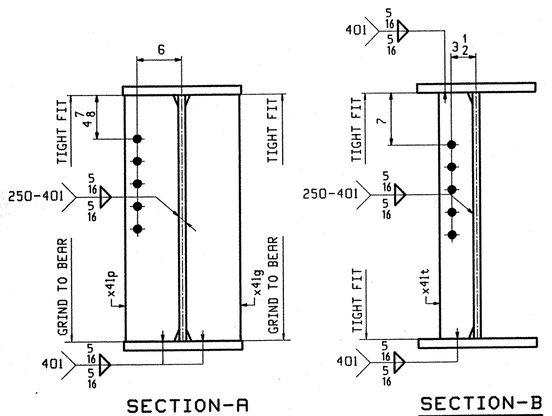

SECTION-A

SECTION-B

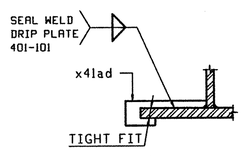

SECTION-D

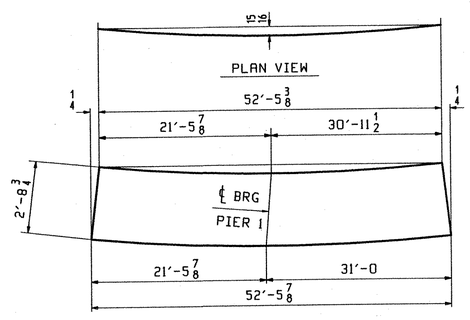

DEV. CAMBER DIAGRAM

ABM INFO		SHIP	BILL OF MATERIAL					JOB NO.	DRAWING NO.	REV.
									406	
PAGE	LINE	MARK	QTY	MARK	MATERIAL	LENGTH FT	LENGTH INCHES	REMARKS	WT	PROCUREMENT NOTES
		G1B	1		GIRDER				12518	
401	N		1	wa	PL 1/2x34 1/4	52	5 7/8	(H270-50WT2) (H2-3)		
401	C		1	ta	PL 1 5/8x16	52	5 3/8	(H270-50WT2) (H2-3)		
401	C		1	ba	PL 1 5/8x16	52	5 7/8	(H270-50WT2) (H2-3)		
402	M		2	x41t	PL 1/2x5	2	8 3/4			
402	K		1	x41p	PL 7/8x7 3/4	2	8 3/4			
402	K		1	x41g	PL 7/8x7 3/4	2	8 3/4			
402	P		1	x41ad	PL 1/4x3 5/8	0	10 15/16			

TVGA
Engineering, Surveying, P.C.

☐ NO EXCEPTIONS TAKEN ☐ REJECTED
☒ FURNISH AS CORRECTED
☐ REVISE AND RESUBMIT

ENGINEER has reviewed Shop Drawings and Samples and other data which Contractor is required to submit, only for conformance with the information given in the Contract Documents and compatibility with the design concept of the completed Project as a functioning whole as indicated in the Contract Documents. Such reviews do not extend to means, methods, techniques, sequences or procedures of construction or to safety precautions and programs incident thereto. Contractor is responsible for dimensions to be confirmed and correlated at the job site; for information that pertains solely to the fabrication processes or to techniques of construction; and for coordination of the work of all trades.

BY: [illegible]
DATE: 01-11-2002

REV.	REMARKS	DATE	DWN	CHK	APP	Q.A.	NO.	DIA.	LGT	TYPE	WASHER
	OUT FOR APPROVAL	10-03-01									
	OUT FOR APPROVAL										
	ISSUED TO SHOP										
	FIELD & OFFICE										

MATERIAL:	ELECTRODES:	HOLES:	SHOP BOLTS:
M270 GR. 50W (UN)		15/16 ø (U.N.)	7/8 ø (U.N.)

SURFACE PREP. & PAINT:
- STEEL WITHIN 10'-0 OF ABUT. 2 SHALL BE PAINTED (SEE GN301)
- ALL OTHER STEEL SHALL BE BLAST CLEANED AND LEFT UNPAINTED.

DESCRIPTION: GIRDER - G1B	DRAWN BY	DATE
JOB: I-89 NB OVER LITTLE RIVER I-89 IMPROVEMENTS BETWEEN TOWNS OF MIDDLESEX & BOLTON COUNTY OF WASHINGTON VERMONT	BW	08/02
	CHKD BY	
	ELC	9/11/01
	APPROV BY	
	SUPERVISOR	W. J. GATTI
PROJ NO. IM-089-2(26)	Q.A.	
CUSTOMER: VERMONT AGENCY OF TRANSPORTATION		

TENSOR 2107-N

CASCO BAY STEEL STRUCTURES, INC.
75 SPRING HILL ROAD SACO, MAINE 04072
PHONE (207) 282-7360 FAX. (207) 282-1179

JOB NO.	DRG. NO.
119-48N	406
	REV. △

ELC Thu Sep 20 09:45:15 EDT 2001 /users/jobs/2107-N/G1B : Rev0