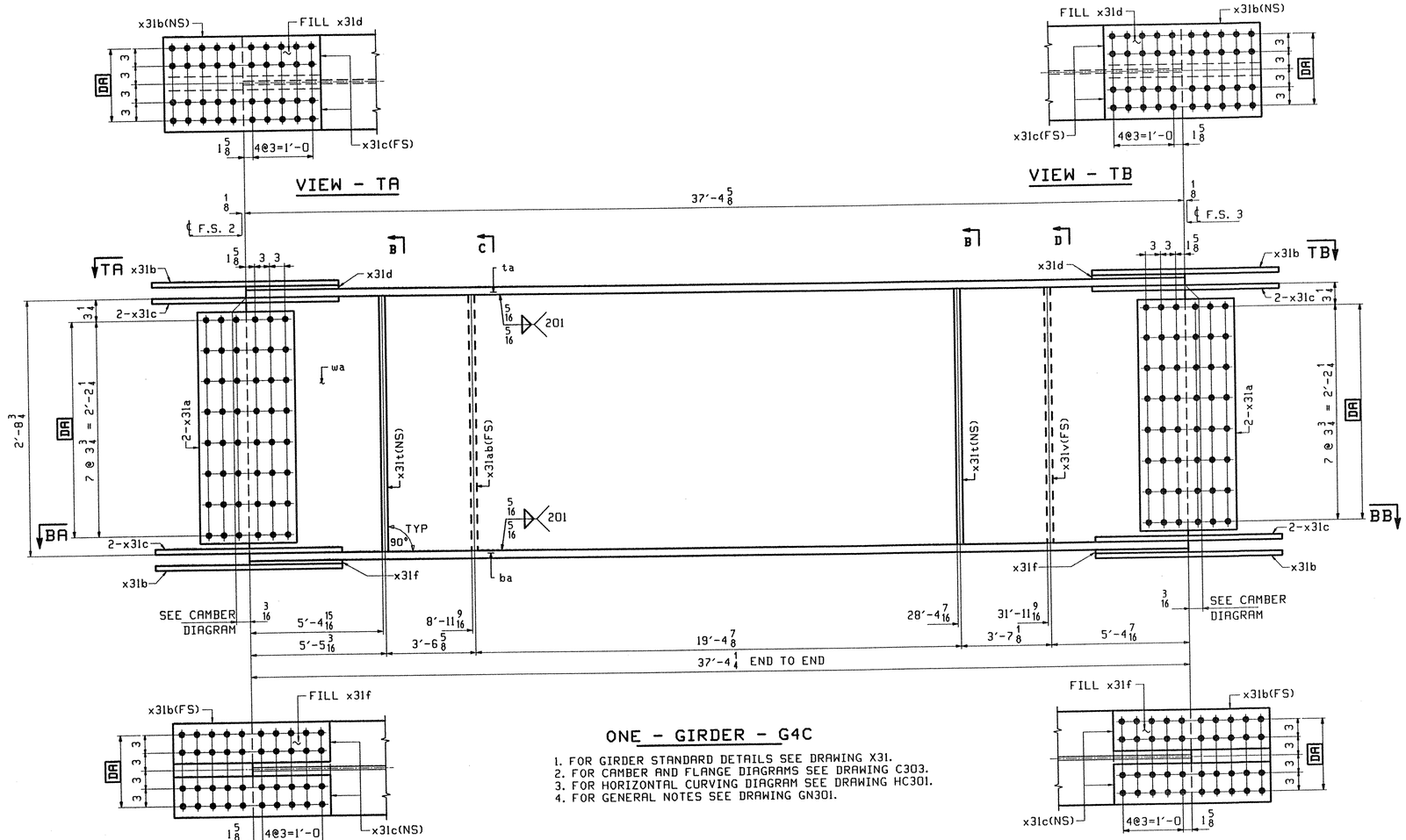

ONE - GIRDER - G4C

1. FOR GIRDER STANDARD DETAILS SEE DRAWING X31.
2. FOR CAMBER AND FLANGE DIAGRAMS SEE DRAWING C303.
3. FOR HORIZONTAL CURVING DIAGRAM SEE DRAWING HC301.
4. FOR GENERAL NOTES SEE DRAWING GN301.

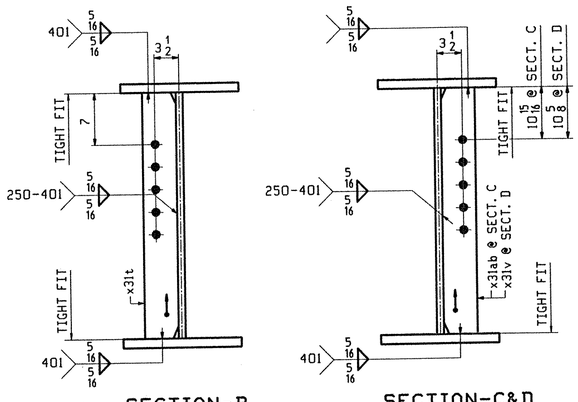

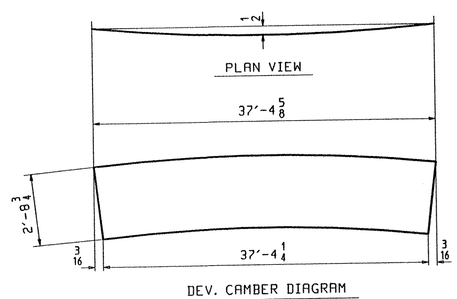

DEV. CAMBER DIAGRAM

SEE DWG. C303

ABM INFO		SHIP	BILL OF MATERIAL						JOB NO.	DRAWING NO.	REV.
										314	
PAGE	LINE	MARK	QTY	MARK	MATERIAL	LENGTH FT	LENGTH INCHES	REMARKS	WT	PROCUREMENT NOTES	
		G4C	1		GIRDER				7088		
301	U		1	wa	PL 1/2x33 7/16	37	4 5/8	(M270-50WT2) (H2-3)			
301	L		1	ta	PL 7/8x16	37	4 5/8	(M270-50WT2) (H2-3)			
301	E		1	ba	PL 15/16x16	37	4 1/4	(M270-50WT2) (H2-3)			
302	B		4	x31a	PL 1/2x29 3/4	1	7	(M270-50WT2) (H2-3)			
302	C		4	x31b	PL 5/8x16	2	7	(M270-50WT2) (H2-3)			
302	D		8	x31c	PL 5/8x7	2	7	(M270-50WT2) (H2-3)			
302	F		2	x31d	PL 3/4x16	1	3 3/8	FILL			
302	G		2	x31f	PL 11/16x16	1	3 3/8	FILL			
302	M		2	x31t	PL 1/2x5	2	8 3/4				
302	M		1	x31ab	PL 1/2x5	2	8 3/4				
302	M		1	x31v	PL 1/2x5	2	8 3/4				

TVGA
Engineering, Surveying, P.C.

☒ NO EXCEPTIONS TAKEN ☐ REJECTED
☐ FURNISH AS CORRECTED
☐ REVISE AND RESUBMIT

ENGINEER has reviewed shop Drawings and Samples and other data which Contractor is required to submit, only for conformance with the information given in the Contract Documents and compatibility with the design concept of the completed Project as a functional unit as indicated in the Contract Documents. Such review does not extend to means, methods, techniques, sequences, or procedures of construction or to safety precautions and programs incident thereto. Contractor is responsible for dimensions to be confirmed and correlated at the job site; for information that pertains solely to the fabrication processes or to techniques of construction; and for coordination of the work of all trades.

BY: Pat W. Scott
DATE: 4/9/01

OUT FOR APPROVAL	3-13-01										
OUT FOR APPROVAL											
ISSUED TO SHOP											
FIELD & OFFICE											
REV.	REMARKS	DATE	DWN	CHK	APP	Q.A.	NO.	DIA.	LGT	TYPE	WASHER

MATERIAL: M270 GR 50W
ELECTRODES:
HOLES: 15/16 ø (UN)
SHOP BOLTS: 7/8 ø (UN)

SURFACE PREP. & PAINT:
-STEEL WITHIN 10'-0 OF ABUT 1 SHALL BE PAINTED (SEE GN301)
-ALL OTHER STEEL SHALL BE BLAST CLEANED AND LEFT UNPAINTED.

DESCRIPTION: GIRDER - G4C

JOB: BRIDGE NO. 48S
I-89 SB OVER LITTLE RIVER
I-89 IMPROVEMENTS
TOWN OF MIDDLESEX-BOLTON, VERMONT

TENSOR 2107-S

PROJ NO. IM-089-2(26)

CUSTOMER: VERMONT AGENCY OF TRANSPORTATION

	DRAWN BY	DATE
	PHG	02/24/01
	CHKD BY	
	ELC	03/6/01
	APPROV BY	
	SUPERVISOR	W. J. GATTI
	Q.A.	
	JOB NO.	DRG. NO.
	118-48S	314
		REV. △

CASCO BAY STEEL STRUCTURES, INC.
75 SPRING HILL ROAD SACO, MAINE 04072
PHONE (207) 282-7360 FAX. (207) 282-1179

PHG Thu Mar 8 15:53:01 EST 2001 /users/jobs/2107-S/314 : Rev0