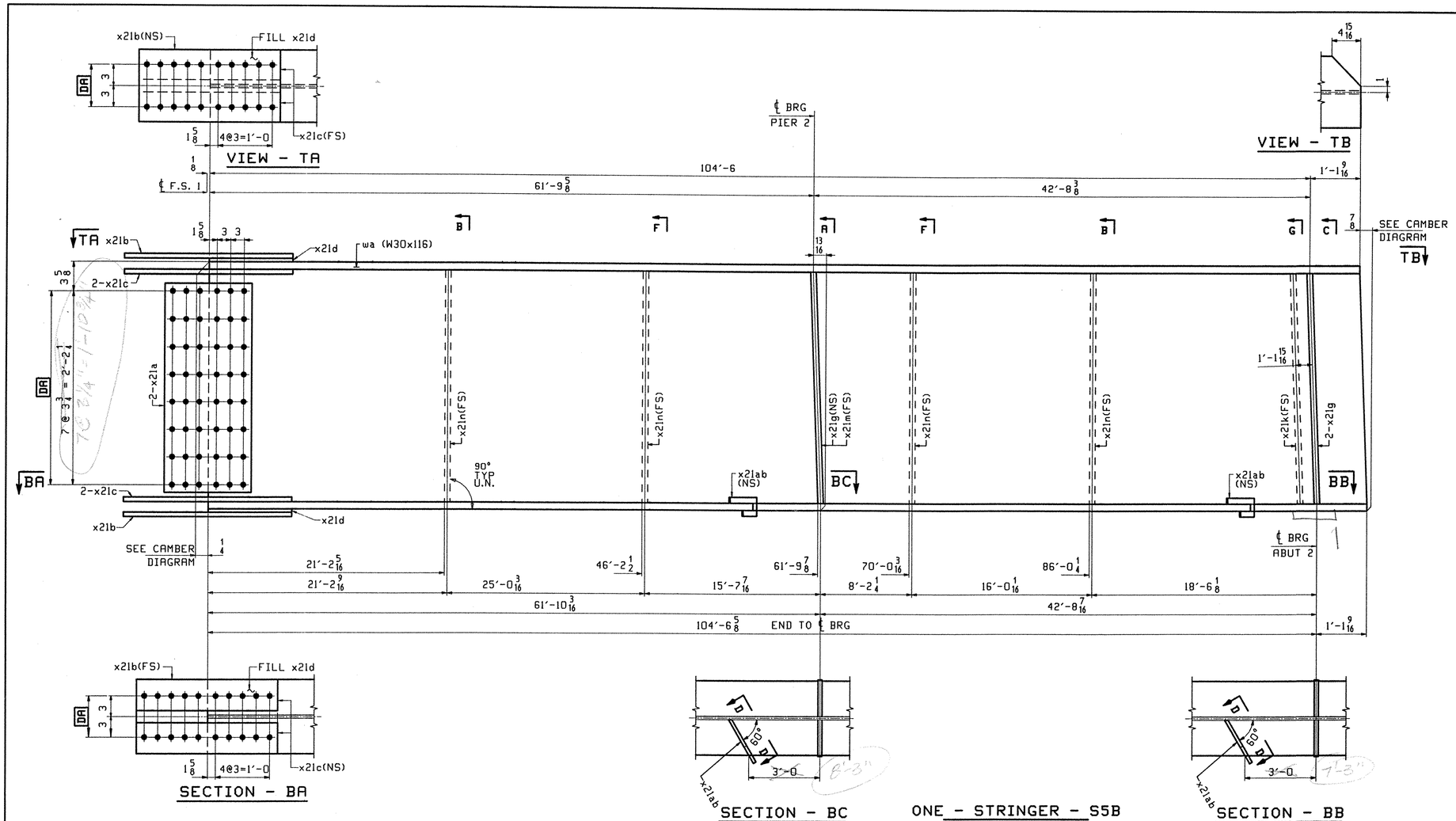

1. FOR STRINGER STANDARD DETAILS SEE DRAWING X21.
2. FOR CAMBER AND FLANGE DIAGRAMS SEE DRAWING C202.
3. FOR GENERAL NOTES SEE DRAWING GN1.

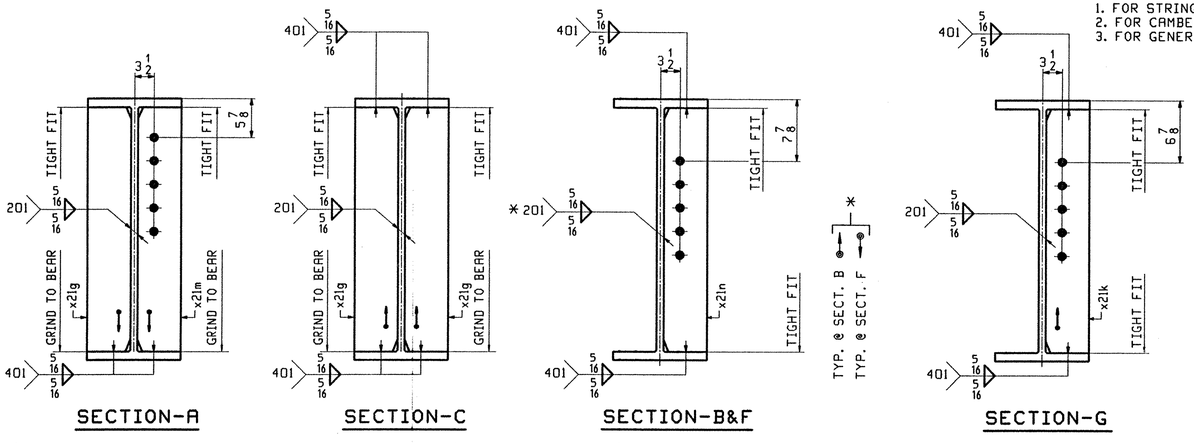

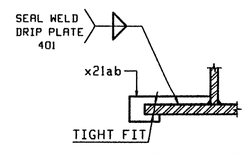

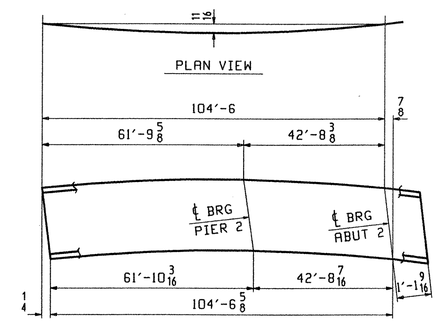

DEV. CAMBER DIAGRAM
SEE SHT. C202

ABM INFO		SHIP	BILL OF MATERIAL					JOB NO.	DRAWING NO.	REV.
									210	
PAGE	LINE	MARK	QTY	MARK	MATERIAL	LENGTH FT	LENGTH INCHES	REMARKS	WT	PROCUREMENT NOTES
		S5B	1		STRINGER				12861	
201	C		1	wa	W 30x116	105	8 7/16	(M270-50WT2) (H2-3)		
202	B		2	x21a	PL 1/2x26 1/4	1	7	(M270-50WT2) (H2-3)		
202	C		2	x21b	PL 5/8x10 1/2	2	7	(M270-50WT2) (H2-3)		
202	D		4	x21c	PL 3/4x4	2	7	(M270-50WT2) (H2-3)		
202	F		2	x21d	PL 5/16x10 1/2	1	3 3/8	FILL		
202	M		4	x21n	PL 1/2x5	2	4 5/16			
202	K		3	x21g	PL 5/8x5	2	4 5/16			
202	K		1	x21m	PL 5/8x5	2	4 5/16			
202	K		1	x21k	PL 5/8x5	2	4 5/16			
202	P		2	x21ab	PL 1/4x2 7/8	0	7 5/8			

OUT FOR APPROVAL	3-5-01									
OUT FOR APPROVAL										
ISSUED TO SHOP										
FIELD & OFFICE										
REV.	REMARKS	DATE	DWN	CHK	APP	Q.A.	NO.	DIA.	LGT	TYPE	WASHER

MATERIAL: M270 GR 50W
ELECTRODES:
HOLES: 15/16 ⌀ (UN)
SHOP BOLTS: 7/8 ⌀ (UN)

SURFACE PREP. & PAINT:
-STEEL WITHIN 10'-0 OF ABUT 2 SHALL BE PAINTED (SEE GN1)
-ALL OTHER STEEL SHALL BE BLAST CLEANED AND LEFT UNPAINTED.

DESCRIPTION: STRINGER - S5B

JOB: BRIDGE NO. 43N
I-89 SB OVER U.S. ROUTE 2
I-89 IMPROVEMENTS
TOWN OF MIDDLESEX-BOLTON, VERMONT

TENSOR 2106-N

PROJ NO. IM-089-2(26)

CUSTOMER: VERMONT AGENCY OF TRANSPORTATION

DRAWN BY	PHG
DATE	02/14
CHKD BY	
TRM	02/21
APPROV BY	
SUPERVISOR	W. J. GATTI
Q.A.	

CASCO BAY STEEL STRUCTURES, INC.
75 SPRING HILL ROAD SACO, MAINE 04072
PHONE (207) 282-7360 FAX. (207) 282-1179

JOB NO. 117-43N
DRG. NO. 210
REV. △

TVGA
Engineering, Surveying, P.C.

☐ NO EXCEPTIONS TAKEN ☐ REJECTED
☑ FURNISH AS CORRECTED
☐ REVISE AND RESUBMIT
ENGINEER has reviewed Shop Drawings and Samples and other data which Contractor is required to submit, only for conformance with the information given in the Contract Documents and compatibility with the design concept of the completed Project as a functioning whole as indicated in the Contract Documents. Such review does not extend to means, methods, techniques, sequences or procedures of construction or to safety precautions and programs incident thereto. Contractor is responsible for dimensions to be confirmed and correlated at the job site; for information that pertains solely to the fabrication processes or to techniques of construction; and for coordination of the work of all trades.

BY: [illegible]
DATE: 11-04-2001