FED. NO. NO DIV. NO.	STATE	FEDERAL PROJECT NO.	SHEET	TOTAL SHEET
	VERMONT	I 002-2(1)	142	800

WESTBOUND	A	B	C	D
W.BT ABUT	3'-4 3/8"	3'-1 1/16"	3'-0 1/2"	3'-4 5/8"
E.BT ABUT	3'-5 3/16"	3'-0 3/16"	3'-3 5/8"	3'-5 5/8"

The inside face of the pylon shall be straight for the full length of the pylon up to the top of the curb on the approach slab and the setbacks shall be made above the curb. Typ. See Detail 'D' Sh. #197.

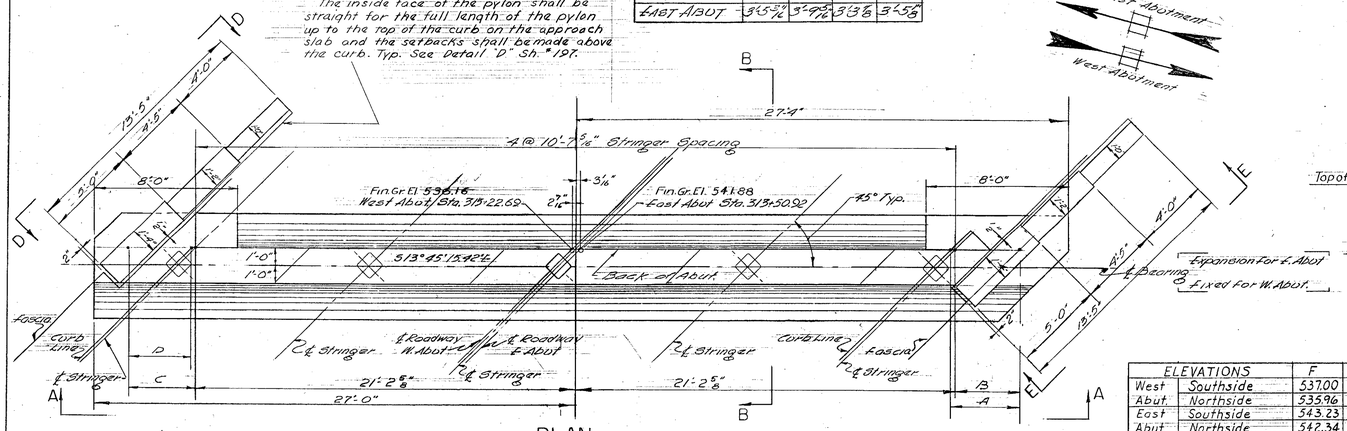

PLAN
Scale: 1/4"=1'-0"

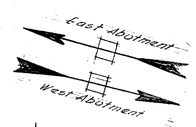

ELEVATIONS		F	G
West	Southside	537.00	533.00
Abut.	Northside	535.96	531.96
East	Southside	543.23	539.23
Abut.	Northside	542.34	538.34

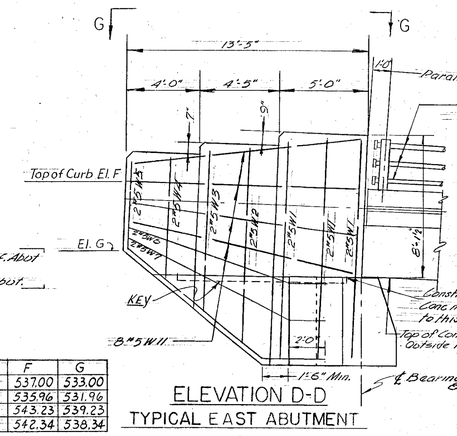

ELEVATION D-D
TYPICAL EAST ABUTMENT
Scale: 1/4"=1'-0"

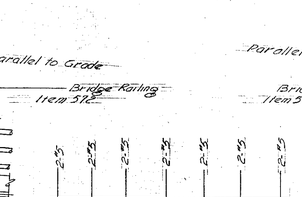

PLAN F-F AS SHOWN
PLAN G-G OPP. HAND
Scale: 1/4"=1'-0"

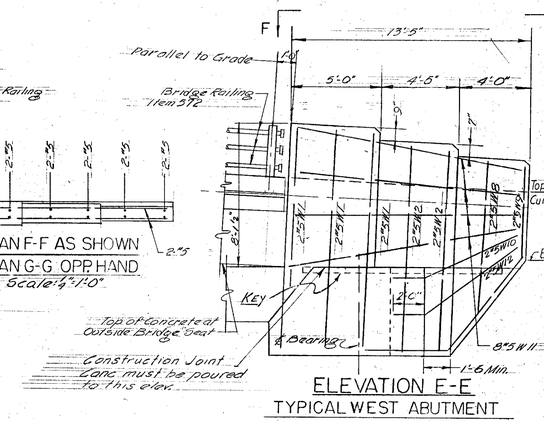

ELEVATION E-E
TYPICAL WEST ABUTMENT
Scale: 1/4"=1'-0"

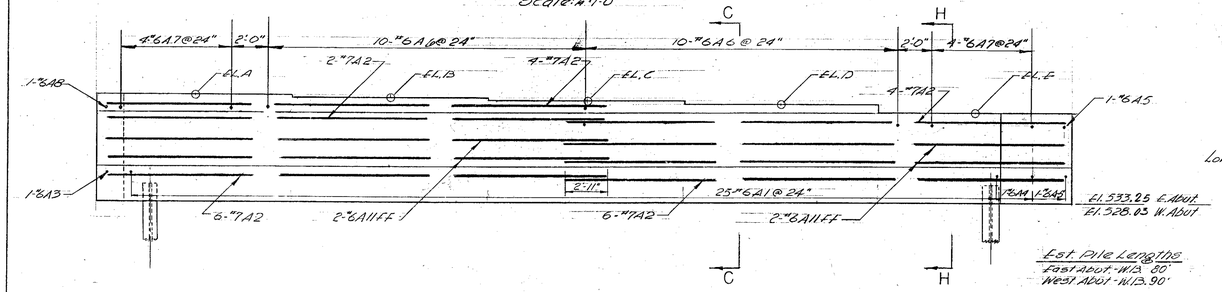

ELEVATION A-A
WEST ABUTMENT AS SHOWN
EAST ABUTMENT OPP. HAND
Scale: 1/4"=1'-0"

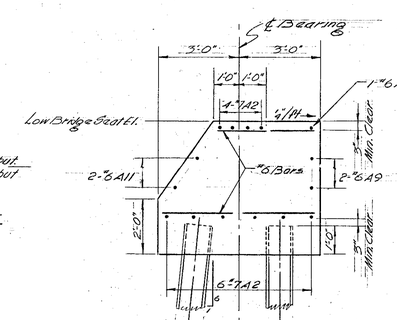

SECTION H-H
Scale: 3/8"=1'-0"

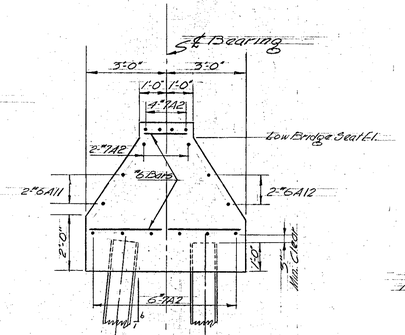

SECTION C-C
Scale: 3/8"=1'-0"

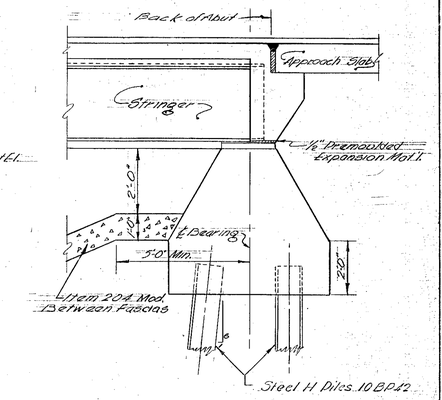

SECTION B-B
Scale: 3/8"=1'-0"

TOP REINFORCING PLAN
Scale: 1/4"=1'-0"

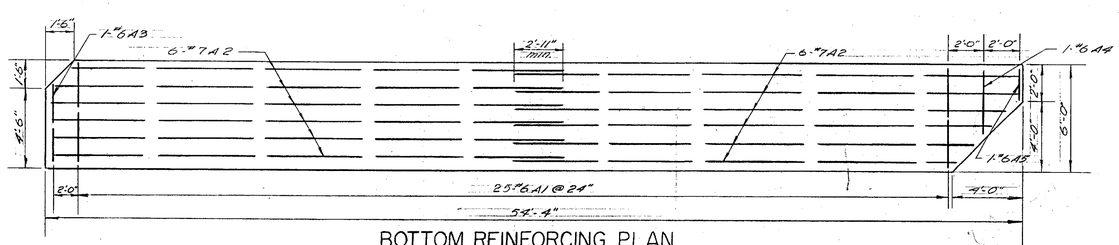

BOTTOM REINFORCING PLAN
Scale: 1/4"=1'-0"

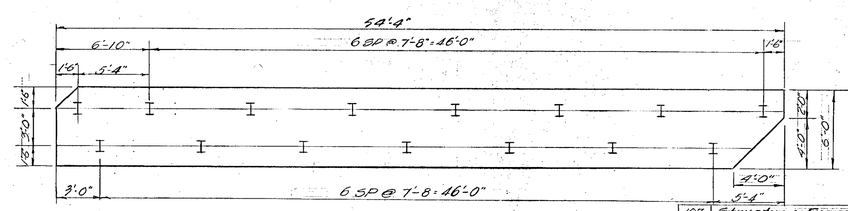

PILE PLAN
Scale: 3/16"=1'-0"

BEARING ELEVATIONS	ELEV. A	ELEV. B	ELEV. C	ELEV. D	ELEV. E
WEST BOUND					
EAST ABUTMENT	539.09	539.02	538.86	538.60	538.25
WEST ABUTMENT	533.98	533.88	533.50	533.41	533.03

NOTE:
1. For General Notes See Sh. #136
2. For Bearing Devices & Anchor Bolts See Detail E Sh. #197
4. For Bridge Marker See Detail W Sh. #198
5. Reinforcing in top of Abutment shall be spaced to pass Anchor Bolts maintaining minimum spacing requirements.
3. Steel H Piles to be driven to a Minimum Bearing capacity of 35 tons & to Elevation directed by the Engineer.

			NEAT	ROUND
107	Structural Excavation E. Abut	CY	16	18
107	Structural Excavation W. Abut	CY	16	18
204	Sub-Base of Crushed Rock (Mod.) E. Abut	CY	86	90
"	" " " " W. Abut	CY	70	74
407	Asphaltic Asbestos Coat. W. & E. Abut	SY	60	
402	Reinforcing Steel W. Abut	LB.	2647	2653
"	" " E. Abut	LB	2408	2613
401B	Class B Concrete (Mod.) E. Abut	CY	61	64
"	" " " W. Abut	CY	61	64
504	Steel Piling 10BP42 E. Abut	LF	1200	
504	" " " W. Abut	LF	1350	

IM 089-2(26)
This sheet for information only

BR 43 N & S

STATE OF VERMONT
DEPARTMENT OF HIGHWAYS

INTERSTATE PROJECT in the towns of
BERLIN - MONTPELIER - MIDDLESEX
OVERPASS STA. 314+00 STRUCTURE #4
WESTBOUND ABUTMENT DETAILS

BOSWELL ENGINEERING CO.
CONSULTING ENGINEERS
RIDGEFIELD PARK, N.J.

SURVEYED BY	DRAWN BY	CHECKED BY	IN CHARGE	SCALE	DATE
VT	D.R.R.	R.J.C.	K.A.	AS SHOWN	AUG. 1957

PROJECT NO. I 89-2-(3) SHEET 221 OF 307