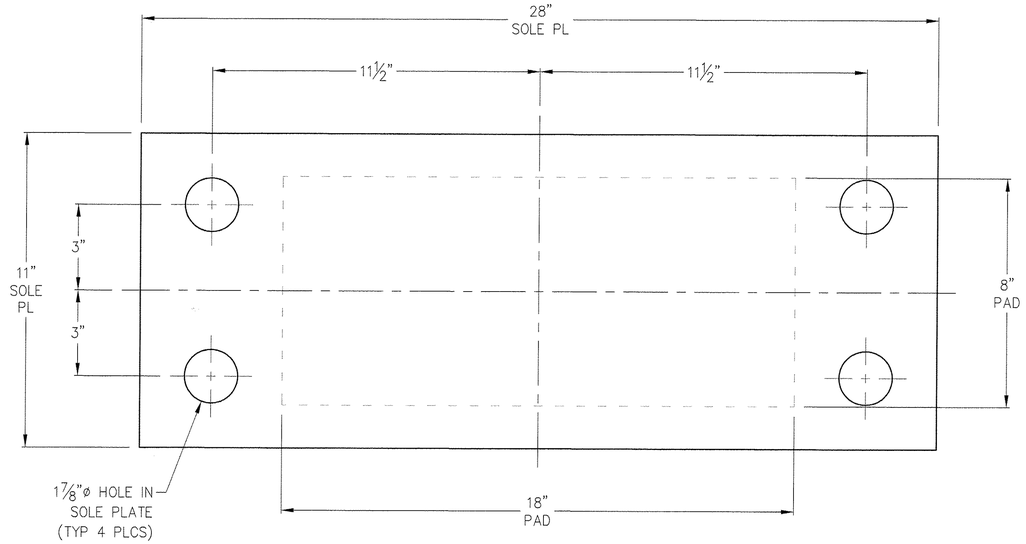

PLAN VIEW

GENERAL NOTES:

SEE SHEET 1

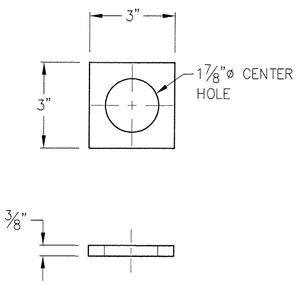

FLAT WASHER DETAIL

⅜" x 3" x 3" ASTM A36 FLAT WASHER

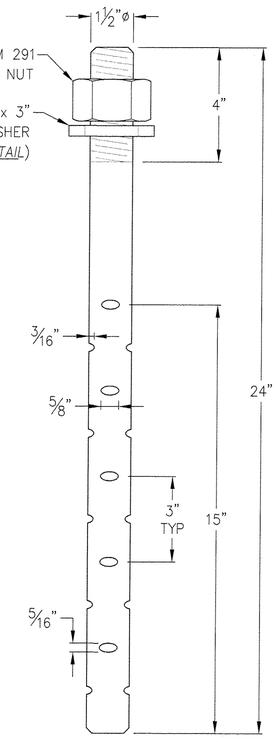

ANCHOR BOLT ASSEMBLY

1½"ø x 24" LONG ASTM A307 SWEDGED ANCHOR BOLT
w/ (1) AASHTO M 291 HEAVY HEX NUT 7
(1) ⅜" x 3" x 3" ASTM A36 FLAT WASHER
ALL GALVANIZED PER AASHTO M 232
(20) REQ'D FOR MK. 02

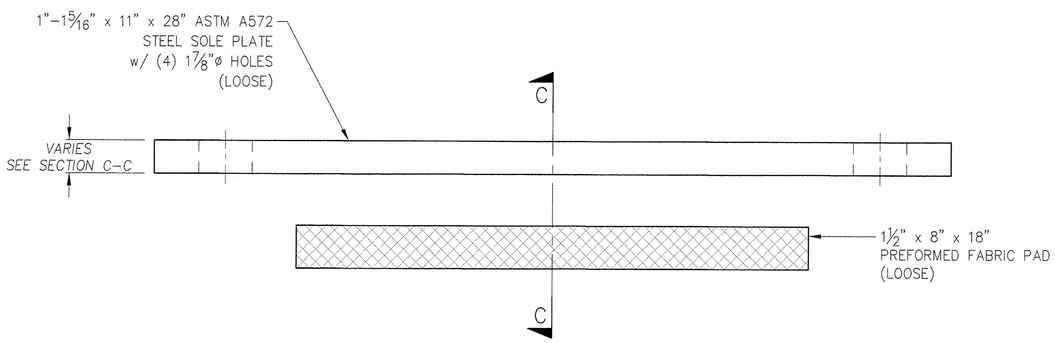

ELEVATION

MK. 02
BRIDGE 3S, ABUT 2
GIRDERS S1–S5
FIXED BEARING – FABRIC PAD
(5) REQ'D

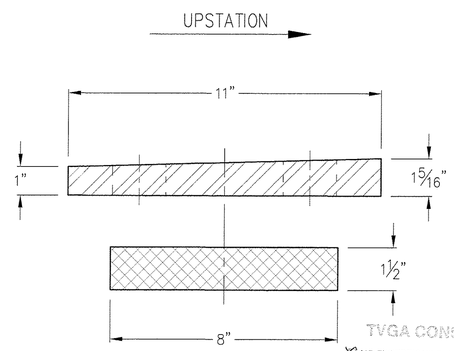

SECTION C–C

TVGA CONSULTANTS

☒ NO EXCEPTIONS TAKEN ☐ REJECTED
☐ FURNISH AS CORRECTED
☐ REVISE AND RESUBMIT

Engineers are responsible for Shop Drawings and Samples and other data which Contractor is required to submit, only for conformance with the information given in the Contract Documents and compatibility with the design concept of the completed Project as a functioning whole as indicated in the Contract Documents. Review is not conducted for errors in means, methods, techniques, sequences or procedures of construction or to safety precautions and programs incident thereto. Such reviews do not relieve Contractor of responsibility or obligation for complying with the Contract Documents. Contractor is responsible for dimensions to be confirmed and correlated at the job site; for information that pertains solely to fabrication processes or to techniques of construction; and for coordination of the work of all trades.

BY: James W Fitzpatrick
DATE: 1/20/09

Seismic Energy Products, L.P.
STRUCTURAL BEARINGS FOR BRIDGES & BUILDINGS
518 PROGRESS WAY PHONE: 903-675-8571
ATHENS, TEXAS 75751 FAX: 903-677-2875

STATE OF VERMONT
AGENCY OF TRANSPORTATION

CUSTOMER: J.A. McDONALD

P.O. NO: SIGNED QT

TOWN OF	HIGHWAY NO.	BRIDGE NO.
GUILFORD	I–91	3N & 3S

PROJECT	PROJECT NO.
GUILFORD	IM 091–1(33)

I–91 OVER BROAD BROOK
& BROAD BROOK ROAD
FIXED BEARINGS – FABRIC PAD

REV	DESCRIPTION	DATE
A	ORIGINAL SHOP DWG ISSUE	11/24/08

SCALE: NTS

DWN BY DMH	DATE 10/3/08	DRAWING NO.	SHEET NO.
CHK BY CW	DATE 10/14/08	38627VT–03	3 OF 8

F:\Drawings\2008\Vermont\ISO-38627-J.A. McDonald\38627VT-03.dwg, 11/24/2008 4:34:13 PM, 1:2.5