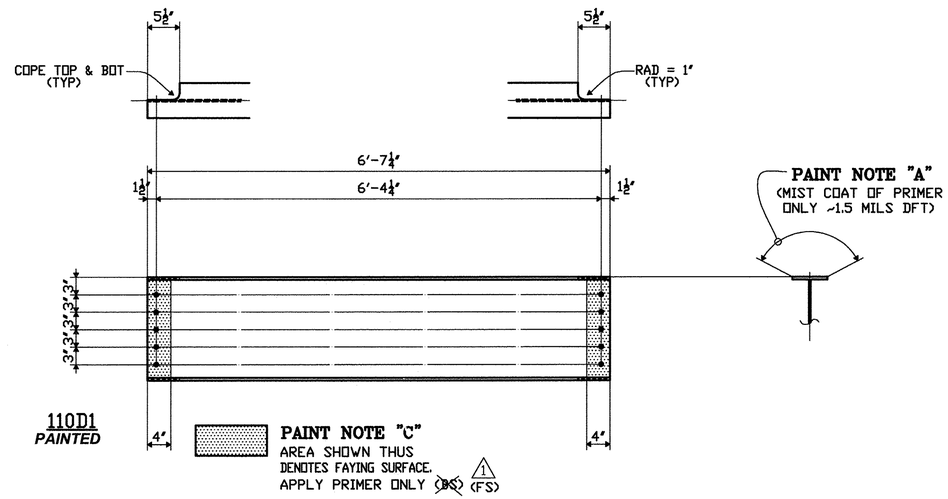

110D1
PAINTED

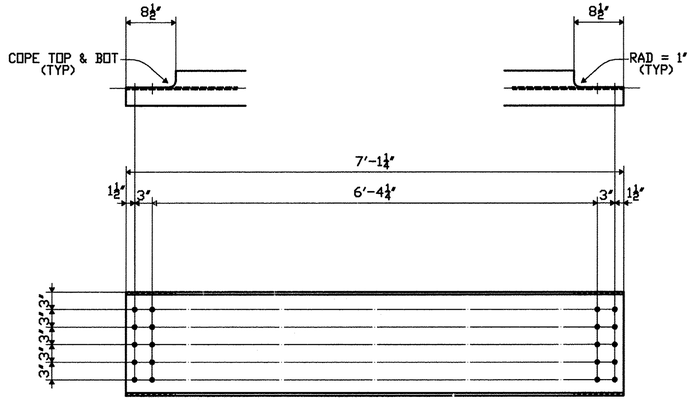

110D2
UN-PAINTED

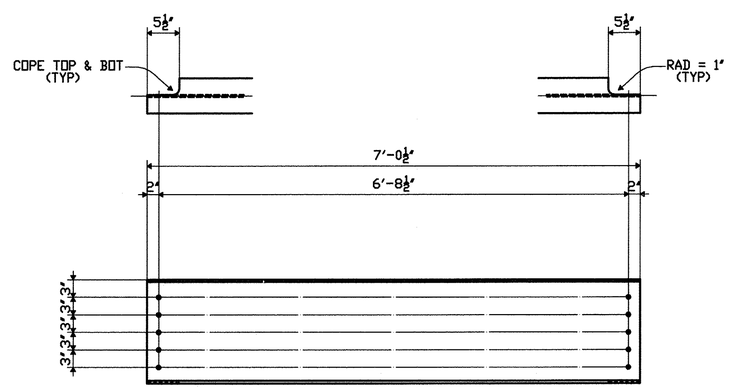

110D3
UN-PAINTED

SHOP BILL

	LINE	SHIPPING LIST NO. PCS.	SHIPPING LIST MARK	PCS REQ'D	DESCRIPTION CODE	DESCRIPTION SYMBOL	DESCRIPTION SECTION DIM'S	LENGTH FEET	LENGTH INCHES	ASSEMBLY MARK	REMARKS	MTRL. SPEC.	MATERIAL APPLICATION P.O. NO.	LINE ITEM	NO. PCS.	LENGTH
	1															
	2															
	3															
PAINTED	4	4	110D1	4		W	18x35	6	7¼			M270-50W	6004NY	1		
	5															
	6															
NO PAINT	7	8	110D2	8		W	18x35	7	1¼			M270-50W	6004NY	1		
	8															
	9															
NO PAINT	10	48	110D3	48		W	18x35	7	0½			M270-50W	6004NY	1		
	11															
	12															
	13															
	14															
	15															
	16															
	17															
	18															
	19															
	20															
	21															
	22															
	23															
	24															
	25		DOMESTIC MATERIAL													

SEE HN101 FOR FABRICATION NOTES

TVGA CONSULTANTS

☑ NO EXCEPTIONS TAKEN ☐ REJECTED
☐ FURNISH AS CORRECTED
☐ REVISE AND RESUBMIT

ENGINEER has reviewed Shop Drawings and Samples and other data which Contractor is required to submit, only for conformance with the information given in the Contract Documents and compatibility with the design concept of the completed Project as a functioning whole as indicated in the Contract Documents. Such reviews do not extend to means, methods, techniques, sequences or procedures of construction or to safety precautions and programs incident thereto. Such reviews do not extend to any LEED certification or accreditation. Contractor is responsible for dimensions to be confirmed and correlated at the job site; for information that pertains solely to the fabrication processes or to techniques of construction; and for coordination of the work of all trades.

BY: Guy Ted
DATE: 7/23/2009

PROJECT No: ACIM 091-1(33)
STA. 22+47.71 TO STA. 25+05.93
BRIDGE No. 3S (SOUTHBOUND)
TOWN OF GUILFORD

FABRICATED BY NASH
HOLES $\frac{15}{16}$Ø SHOP FASTENERS
SHOP PAINT PAINTED PER HN101 FOR ITEMS NOTED
SHOP INSPECTION
GENERAL NOTES

REVISIONS			
DATE	NO.	BY	
07/08/09	R1	PDC/SB	REVISED NOTATION (BS) TO (FS)

ORDER NO. 08-18537H32
DETAILS OF DIAPHRAGMS
PROJECT I-91 OVER BROAD BROOK AND BROAD BROOK ROAD
LOCATION WINDHAM COUNTY, VT
CUSTOMER MEC CONSTRUCTION

CAROLINA STEEL GROUP, LLC.

MADE BY GM
CHECKED BY PDC/SB
SQUAD LEADER Precise Drafting Co. Inc.
DATE 09-08
SHEET HF110