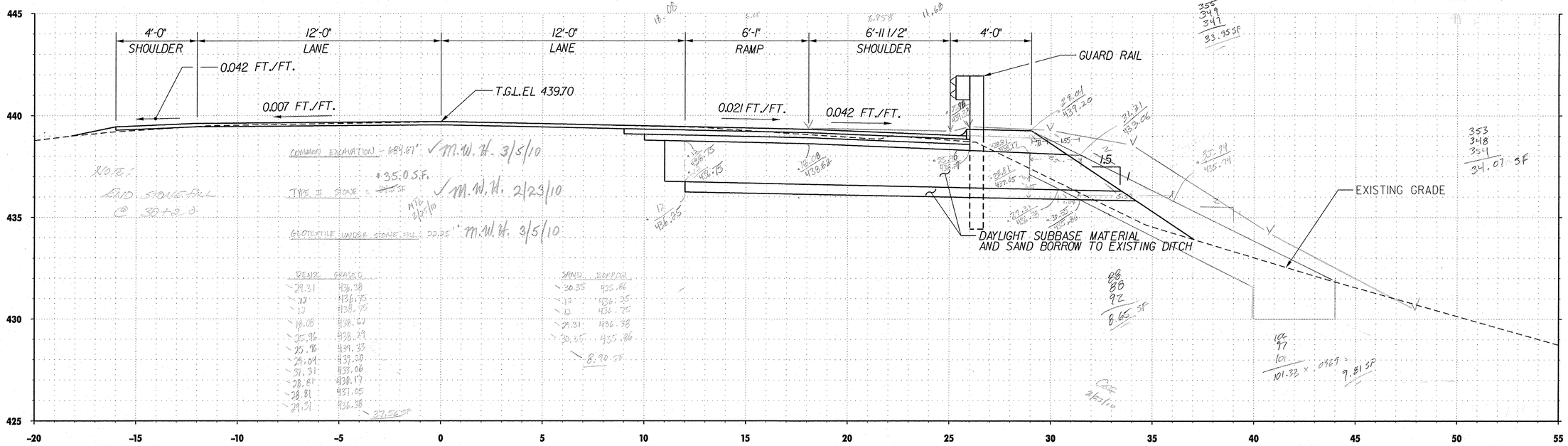

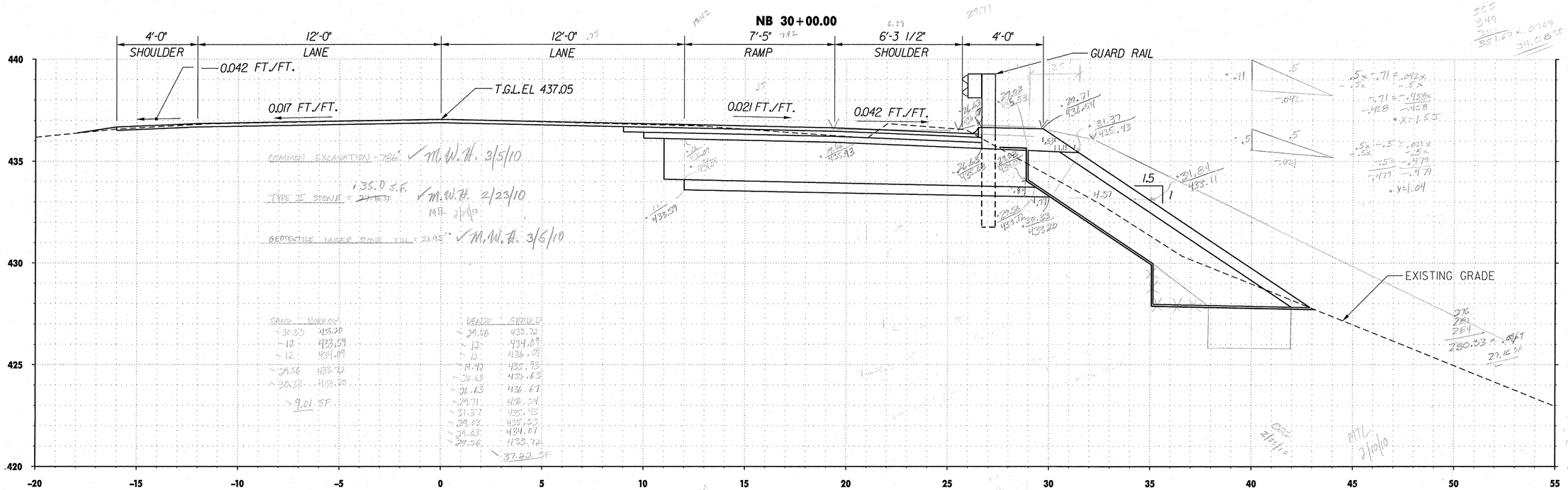

1 0 2 4 6

SCALE IN FEET

TVGA ENGINEERING, SURVEYING, P.C.

STATE OF VERMONT
AGENCY OF TRANSPORTATION

Designed By		Drawn By	
Checked By	Date	Bridge Design Supervisor	Date
Town Of	Bridge No.	PROJECT Guilford	PROJECT NO. ACTM091-1(53)
Highway No.	Log Sta. / Surv. Sta.	TVGA CAD Drawing No.	Date
		Bridge Sheet No.	Sheet 15 of 17