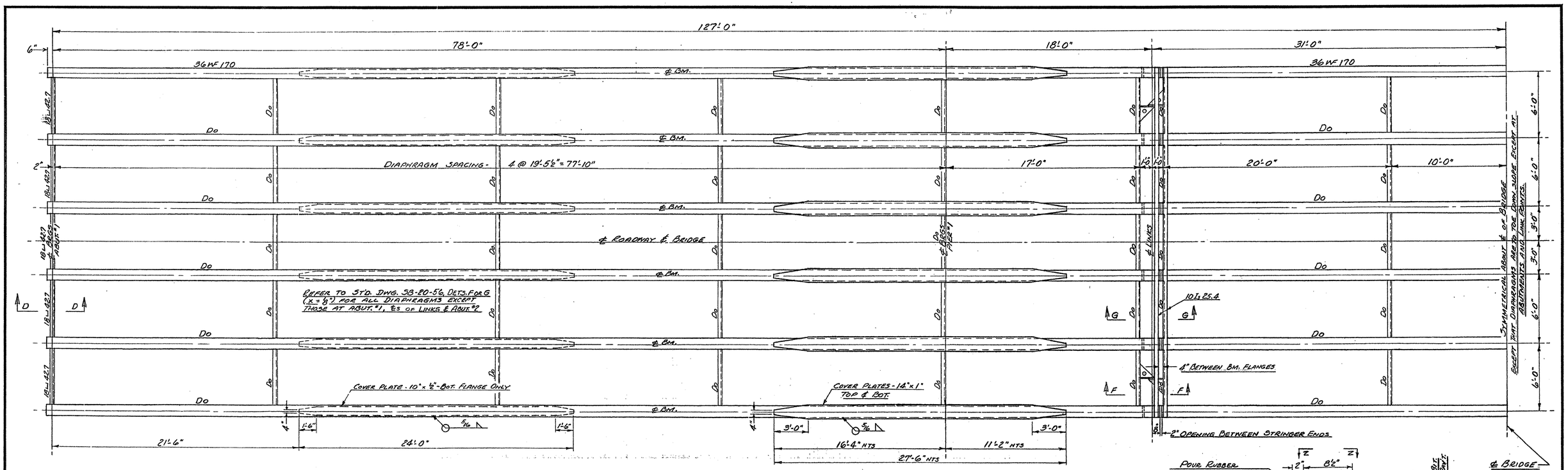

STEEL HALF-PLAN
SCALE: ¼" = 1'-0"

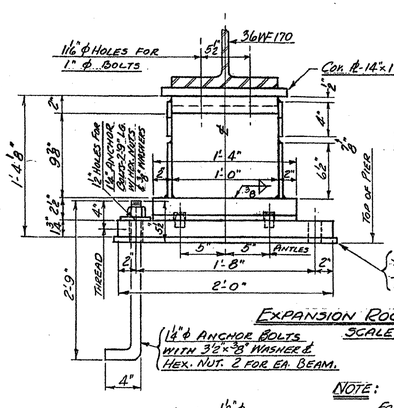

EXPANSION ROCKERS AT PIERS
SCALE: 1½" = 1'-0"

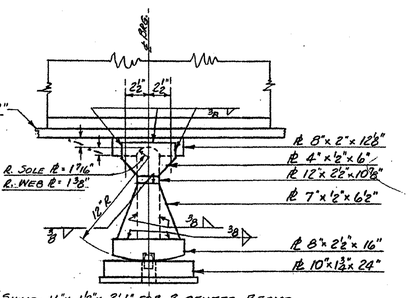

NOTE:
For fixed end bearing devices at abutments, see Std. Dwg. SB-20-56, Detail C.

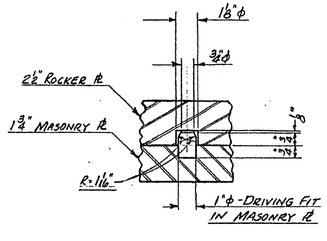

PINTLE DETAIL
SCALE: 3" = 1'-0"

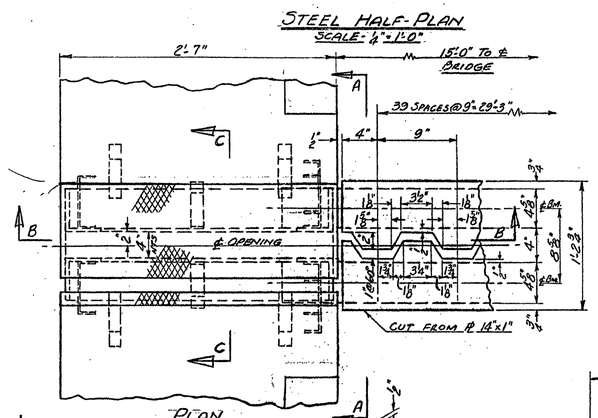

PLAN
SCALE: 1½" = 1'-0"

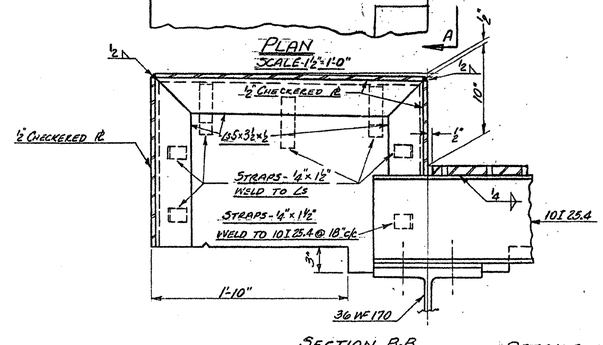

SECTION B-B
SCALE: 1½" = 1'-0"

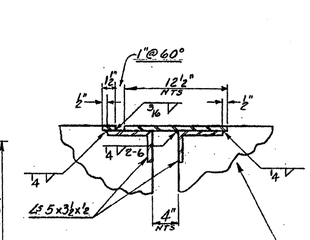

SECTION C-C
SCALE: 1½" = 1'-0"

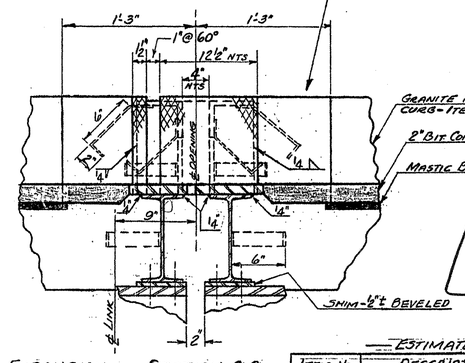

SECTION A-A
SCALE: 1½" = 1'-0"

Suspended Span

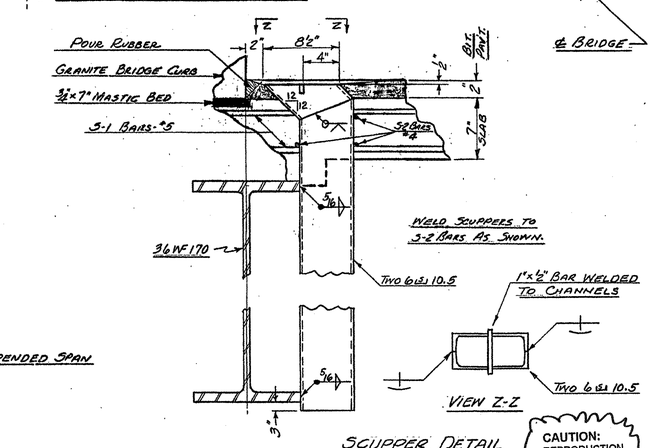

SCUPPER DETAIL
SCALE: 1½" = 1'-0"

CAUTION: REPRODUCTION IS NOT TO SCALE

DETAILS OF EXPANSION DAMS AT SAFETY CURB

(ONE BRIDGE ONLY)

ESTIMATED QUANTITIES

Item No.	Description	Net	Over	Total	Final
404-A	Structural Steel	350,000	7000	357,000	356,346 N. Bound 356,343 S. Bound

IM 091-1(33)
This sheet for information only.
BR 3 N&S
Sheet 102 of 114

STATE OF VERMONT
DEPARTMENT OF HIGHWAYS

Town of GUILFORD
Route No. INTERSTATE Log. Sta.
STEEL PLAN & STEEL DETAILS

Scale AS NOTED
Surveyed by POGAR
Drawn by RTB 5/86 Checked by HES 7/86
Project No. I-001-1(6)
Sheet 102 of 114