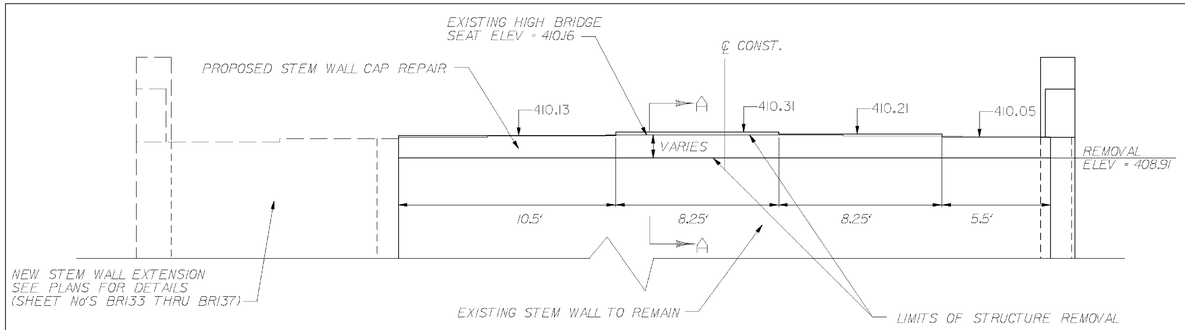

ABUTMENT 1 ELEVATION (3N)

SCALE: 1/4" = 1'-0"

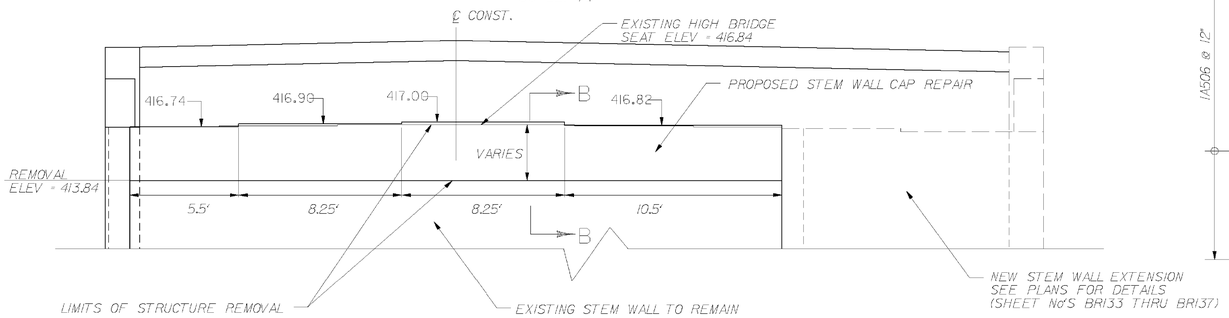

ABUTMENT 2 ELEVATION (3N)

SCALE: 1/4" = 1'-0"

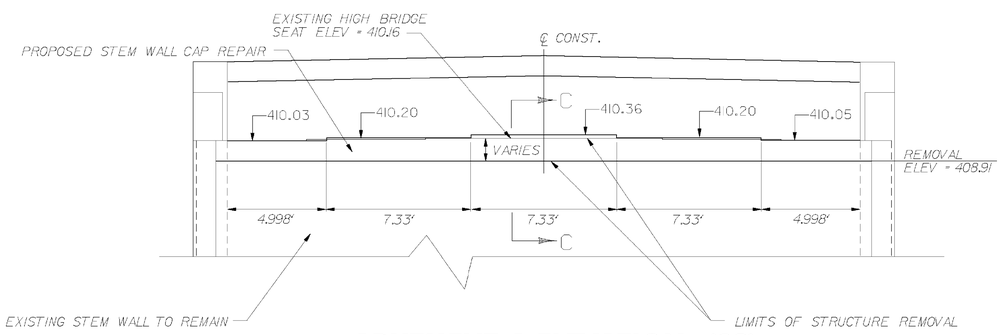

ABUTMENT 1 ELEVATION (3S)

SCALE: 1/4" = 1'-0"

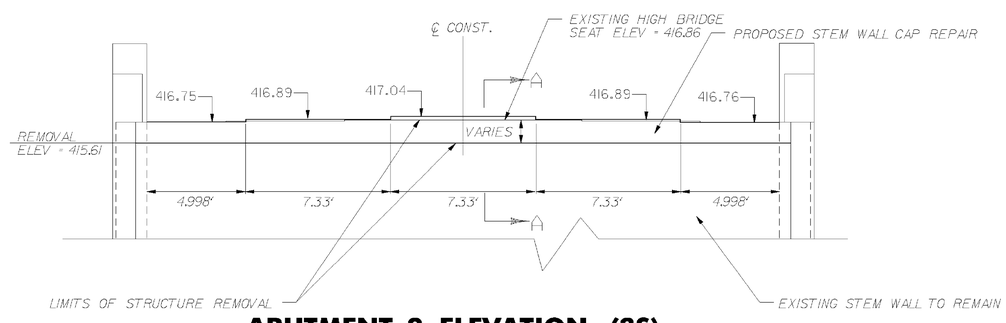

ABUTMENT 2 ELEVATION (3S)

SCALE: 1/4" = 1'-0"

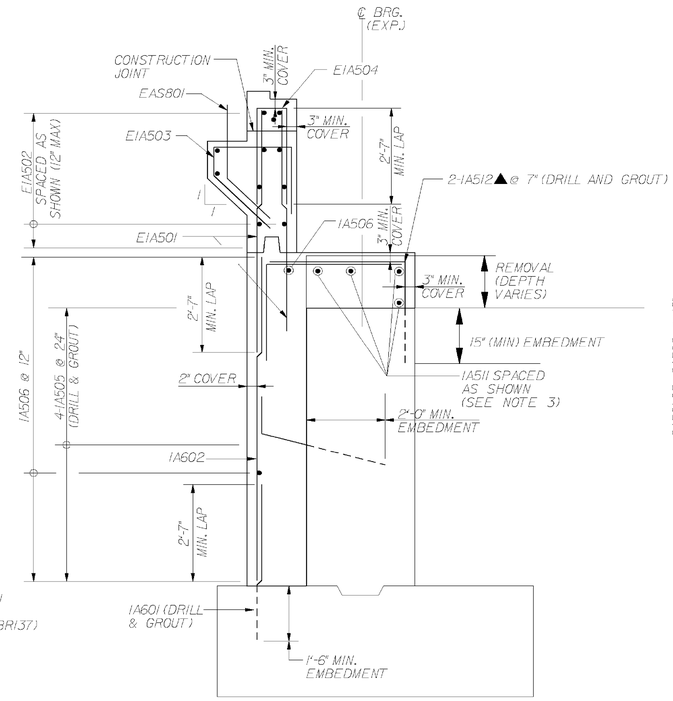

SECTION C–C

SCALE: 1/2" = 1'-0"

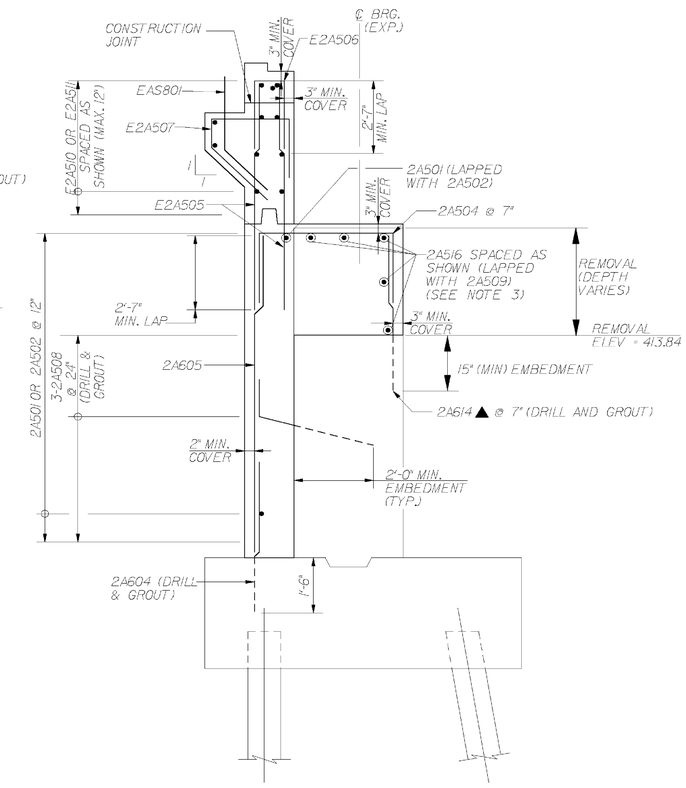

SECTION B–B

SCALE: 1/2" = 1'-0"

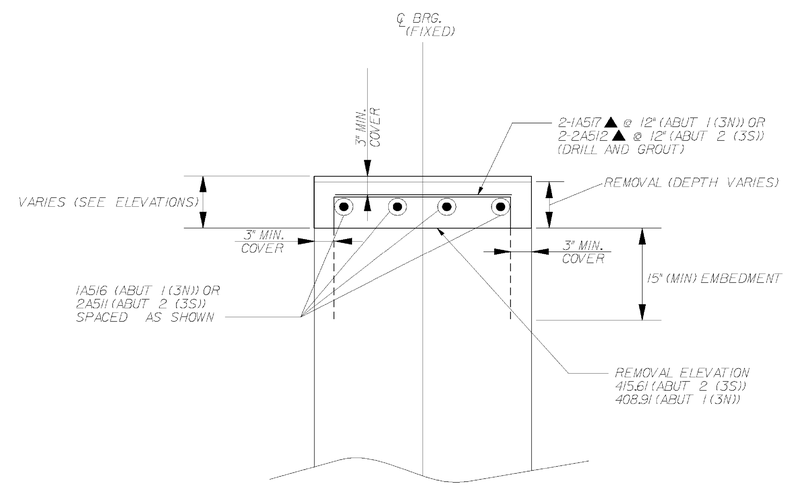

SECTION A–A

SCALE: 1" = 1'-0"

NOTES:

1. CONTRACTOR SHALL REMOVE ALL EXISTING CONCRETE STEM WALLS FROM THE TOP DOWN TO THE REMOVAL ELEVATIONS SHOWN ON THIS DRAWING. THE PROPOSED STEM WALL CAP REPAIR SHALL BE BUILT TO THE DIMENSIONS AND ELEVATIONS DETAILED. SEE REVISED REINFORCING STEEL SCHEDULE DRAWINGS FOR CHANGES AND ADDITIONS TO THE STEEL REINFORCMENT.
2. REFER TO ORIGINAL CONTRACT DRAWINGS FOR ADDITIONAL ABUTMENT PLANS AND DETAILS.
3. LONGITUDINAL AND TRANVERSE BRIDGE SEAT REINFORCING SPACING SHALL BE MODIFIED AS NECESSARY TO ASSURE THAT THERE IS NO CONFLICT WITH THE BEARING DEVICE ANCHOR BOLTS.

LEGEND

▲ DENOTES BARS TO BE CUT IN THE FIELD.

TVGA ENGINEERING, SURVEYING, P.C.

STATE OF VERMONT
AGENCY OF TRANSPORTATION

Town Of GUILFORD		Bridge No. 3N & 3S	
Highway No. I-91		Log Sta. / Surv. Sta.	
I-91 NB OVER BROAD BROOK & BROAD BROOK ROAD			
STEM WALL CAP REPAIRS			
Designed By E. FISCHLEIN		Drawn By R. TIEDE	
Checked By E. FISCHLEIN Date 11/08		Bridge Design Supervisor K. WOJTKOWSKI Date 11/08	
PROJECT GUILFORD		PROJECT NO. IM 091-1(33)	
TVGA CAD Drawing No.G ABUTS V8.dgn		Date 11/14/08	
Bridge Sheet No. BRI44AR		Sheet 70AR of 114	