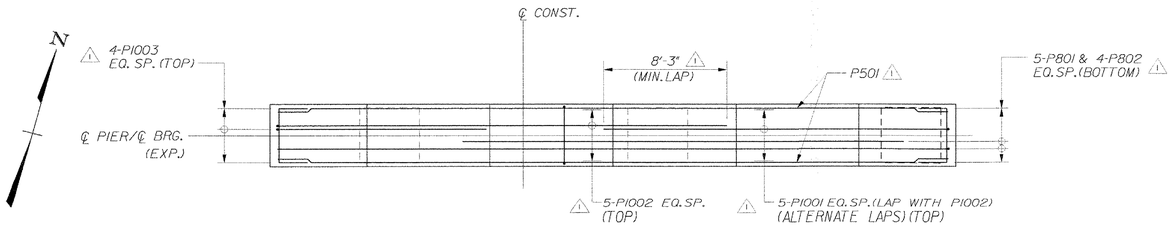

PLAN (3N)

SCALE: 3/16" = 1'-0"

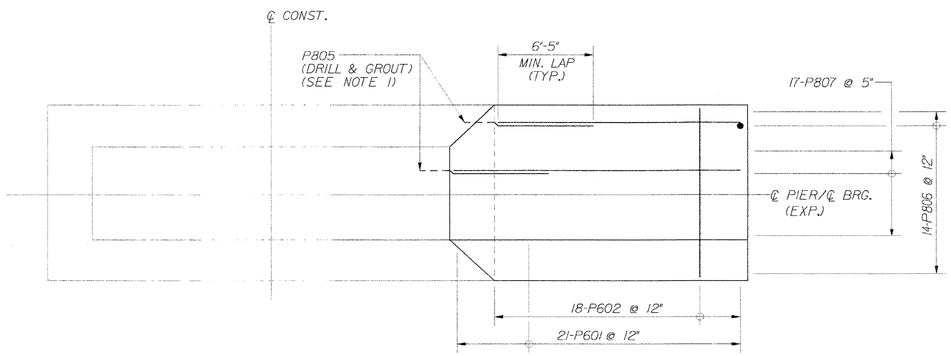

FOOTING PLAN (3N)

SCALE: 3/16" = 1'-0"

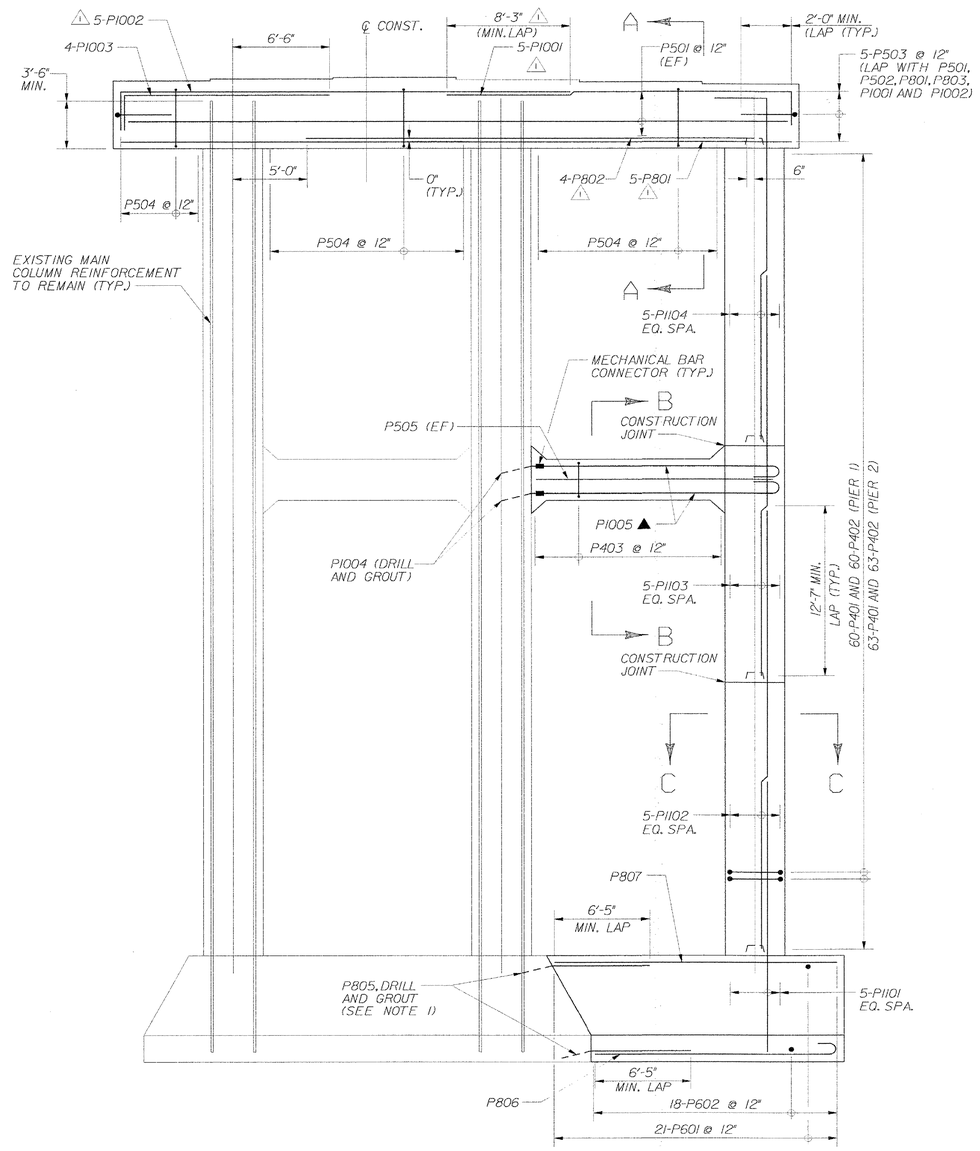

PIER ELEVATION (3N)

SCALE: 3/16" = 1'-0"

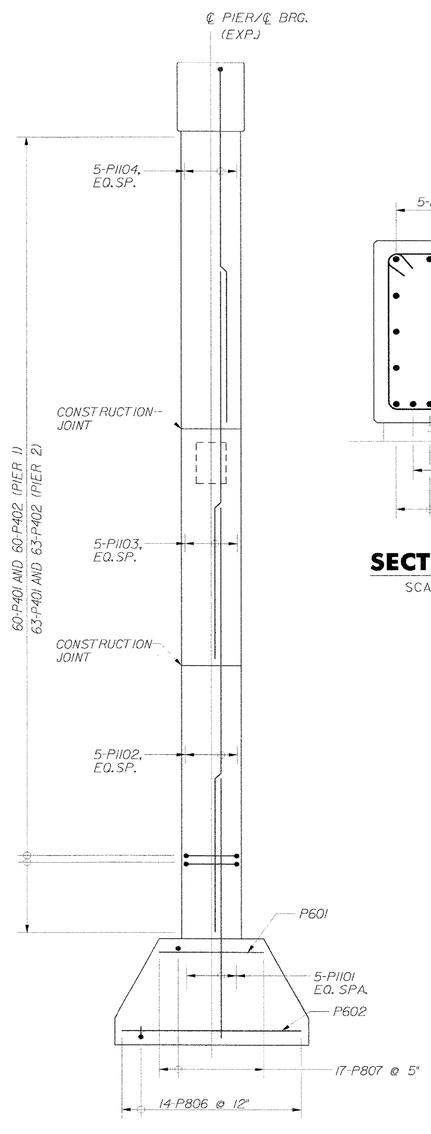

END ELEVATION (3N)

SCALE: 3/16" = 1'-0"

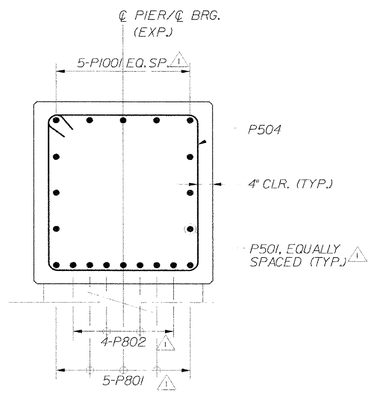

SECTION A–A

SCALE: 1/2" = 1'-0"

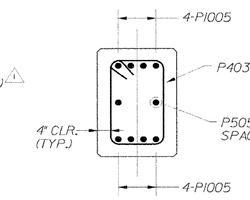

SECTION B–B

SCALE: 1/2" = 1'-0"

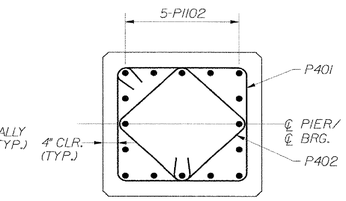

SECTION C–C

SCALE: 1/2" = 1'-0"

NOTES:

1. DRILL AND GROUT BARS SHALL BE DRILLED AND EPOXY GROUTED 2'-3" MINIMUM INTO THE CONCRETE. DRILL AND EPOXY GROUT SYSTEM SHALL BE:
   - DAYTON SUPERIOR SURE-ANCHOR J-51 SYSTEM
   - HILTI, INC. HIT HY-150 SYSTEM
   - UNITEX PRO-POXY 300 FAST SYSTEM

   OR EQUIVALENT APPROVED BY VAOT MATERIALS AND RESEARCH SECTION. ALL COSTS FOR DRILLING AND EPOXY GROUTING REINFORCING BARS SHALL BE PAID UNDER ITEM 507.16, "DRILLING AND GROUTING DOWELS".
2. FOR DRILL AND GROUT BAR DETAIL, SEE TYPICAL BRIDGE DETAILS, BRIDGE SHEET BR129.

KEY

NF	NEAR FACE
FF	FAR FACE
EF	EACH FACE
▲	REINFORCEMENT TO BE CUT TO FIT IN THE FIELD

REV. NO.	DATE	COMMENT
1	02-02-09	REVISED DIMENSIONS AND QUANTITIES

THIS SHEET SUPERSEDES BR140

TVGA ENGINEERING, SURVEYING, P.C.

STATE OF VERMONT
AGENCY OF TRANSPORTATION

Town Of	GUILFORD	Bridge No.	3N
Highway No.	I-91	Log Sta. / Surv. Sta.	

I-91 NB OVER BROAD BROOK & BROAD BROOK ROAD

PIER REINFORCEMENT (3N)

Designed By	M.J. MOZER	Drawn By	D.M. BOWEN
Checked By	P.W. SZUSTAK	Date 01/03	Bridge Design Supervisor J.P. HALSTEAD Date 01/03
PROJECT	GUILFORD	PROJECT NO.	IM 091-1(33)
TVGA CAD Drawing No.	G NB PRF.dgn	Date	04/28/08
Bridge Sheet No.	BR140R	Sheet	66R of 114