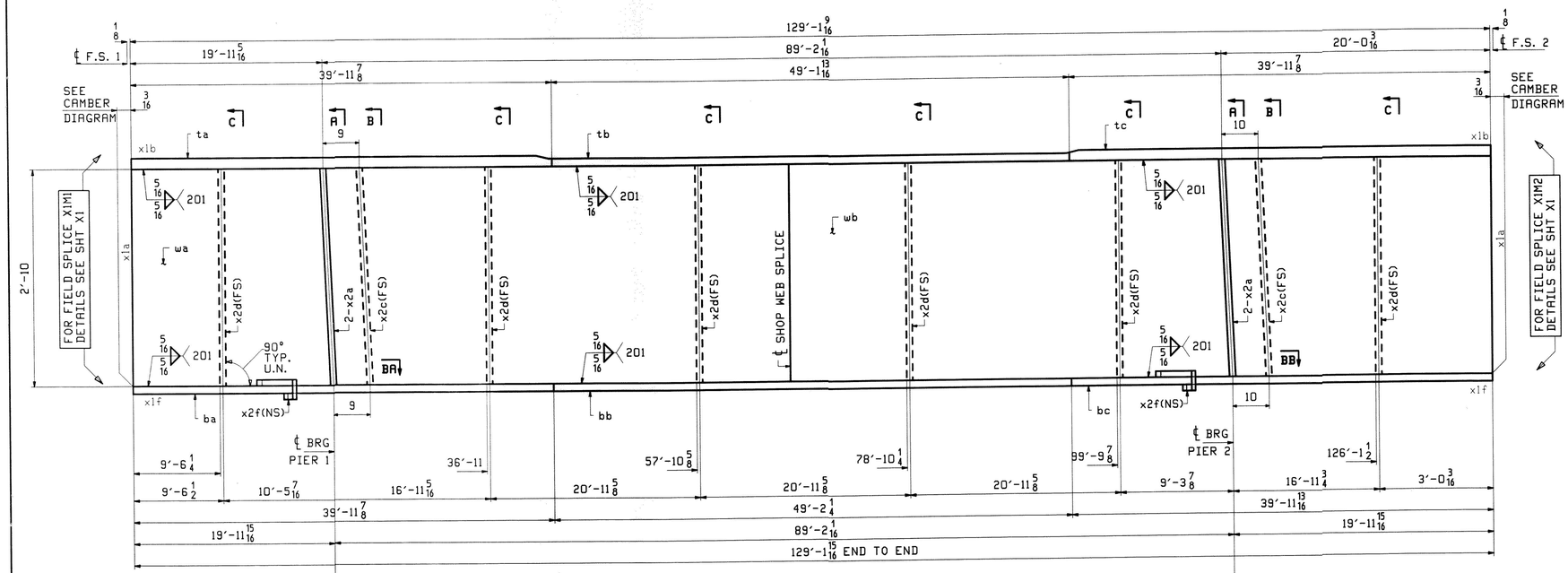

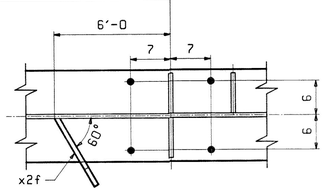

SECTION BA

ONE - GIRDER - 10G5B (DEV)

FOR FIELD SPLICE & STANDARD DETAILS SEE X SHEETS
FOR CAMBER DIAGRAM SEE SHEET C1
FOR FLANGE DIAGRAM SEE SHEET F2
FOR GENERAL NOTES SEE SHEET GN1

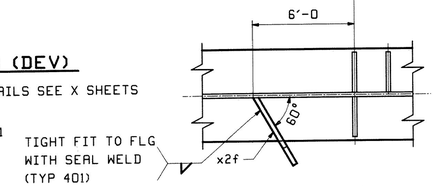

SECTION BB

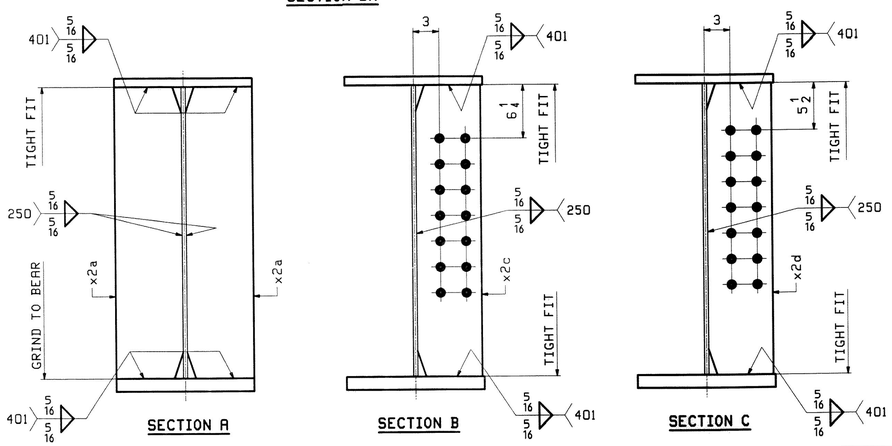

SECTION A

SECTION B

SECTION C

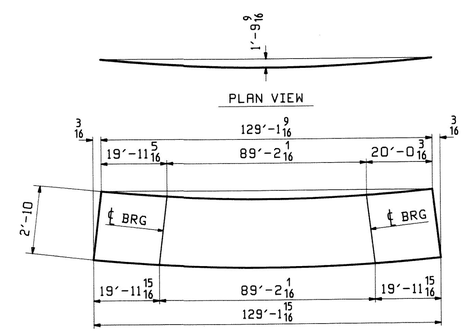

DEV. ORIENTATION DIAGRAM

ABM INFO		SHIP	BILL OF MATERIAL						JOB NO.	DRAWING NO.	REV.
									438	10	
PAGE	LINE	MARK	QTY	MARK	MATERIAL	LENGTH FT	LENGTH INCHES	REMARKS	WT	PROCUREMENT NOTES	
		10G5B	1		GIRDER				27784		
4	U		1	wa	PL 1/2×34	62	5 15/16	M270-50WT2			
4	G		1	wb	PL 1/2×34	66	8 1/8	M270-50WT2			
2	L		1	ta	PL 1 1/2×16	39	11 7/8	M270-50WT2			
3	L		1	tb	PL 1×16	49	1 13/16	M270-50WT2			
2	L		1	tc	PL 1 1/2×16	39	11 7/8	M270-50WT2			
2	L		1	ba	PL 1 1/2×16	39	11 7/8	M270-50WT2			
1	Y		1	bb	PL 1 1/2×16	49	2 1/4	M270-50WT2			
2	L		1	bc	PL 1 1/2×16	39	11 13/16	M270-50WT2			
6	K		4	x2a	PL 7/8×7 3/4	2	10	MIE			
6	L		2	x2c	PL 1/2×7 1/2	2	10				
6	L		6	x2d	PL 1/2×7 1/2	2	10				
6	N		2	x2f	PL 1/4×3 1/2	0	11 1/8				

REV.	DATE	REMARKS	DWN	CHK	APVL	SHOP
0					JAN 2 1 2010	

MATERIAL:	SURFACE PREP. & PAINT:	HOLES:	SHOP BOLTS:
M270-50W (UN)	SEE GN1	15/16"Ø U.N.	NONE

DESCRIPTION: GIRDER - 10G5B

CASCO BAY STEEL STRUCTURES, INC.
75 SPRING HILL ROAD SACO, MAINE 04072
PHONE (207) 282-7360 FAX. (207) 282-1179
TENSOR 2945

STRUCTURE: U.S. 5 over I-91
Bridge No. 19A
Putney
County of Windham

DRAWN: WJF	DATE: 01/11		
CHKD: DO	DATE: 01/14		
LOCATION: Putney	JOB NO. 438	DWG NO. 10	
PROJ NO. IM 091-1(31)			
CUSTOMER: VT AOT		REV.	

X
2/9/10