ABM INFO		SHIP	BILL OF MATERIAL					JOB NO.	DRAWING NO.	REV.
								438	4	
PAGE	LINE	MARK	QTY	MARK	MATERIAL	LENGTH FT	LENGTH INCHES	REMARKS	WT	PROCUREMENT NOTES
		4G4A	1		GIRDER				8280	
5	S		1	wa	PL $\frac{1}{2}$x34	41	$1\frac{5}{16}$	M270-50WT2		
3	U		1	ta	PL 1x16	41	$1\frac{5}{16}$	M270-50WT2		
2	G		1	ba	PL $1\frac{1}{2}$x16	41	$0\frac{5}{8}$	M270-50WT2		
6	K		1	x2a	PL $\frac{7}{8}$x$7\frac{3}{4}$	2	10	MIE		
6	K		1	x2b	PL $\frac{7}{8}$x$7\frac{3}{4}$	2	10	MIE		
6	L		1	x2c	PL $\frac{1}{2}$x$7\frac{1}{2}$	2	10			
6	L		4	x2d	PL $\frac{1}{2}$x$7\frac{1}{2}$	2	10			

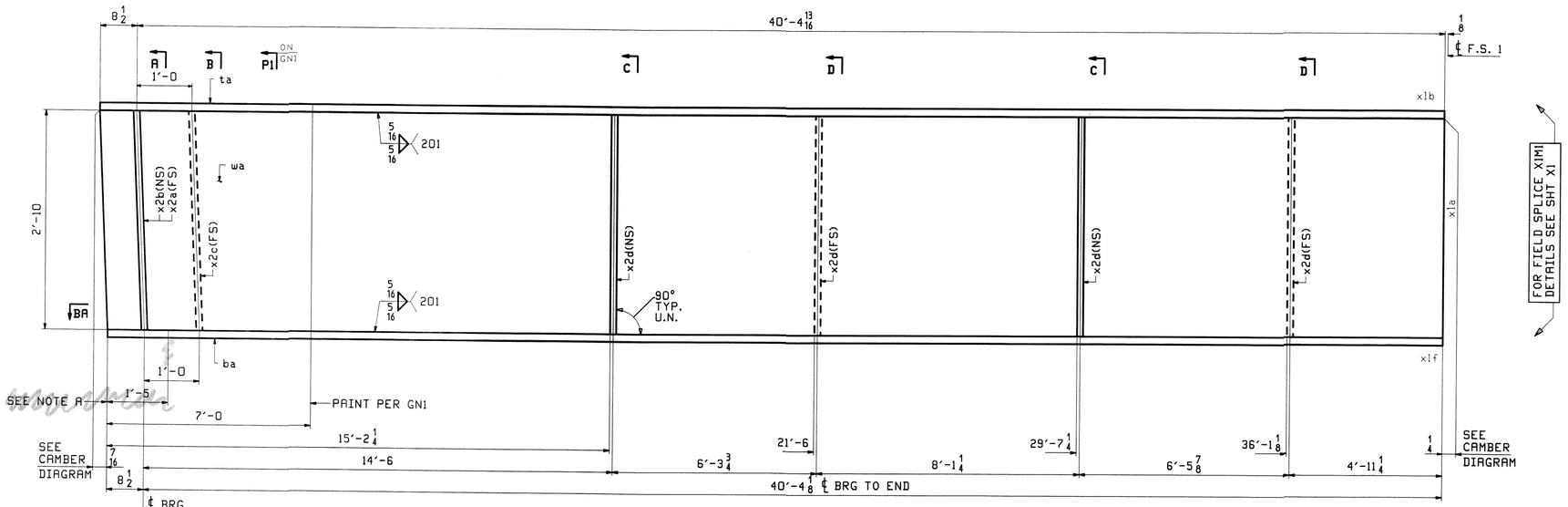

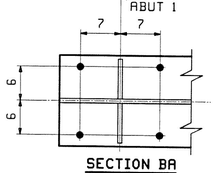

SECTION BA

PLAN VIEW

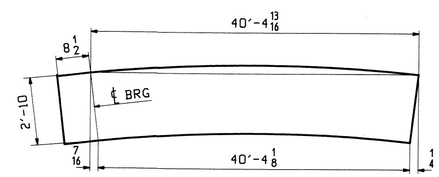

DEV. ORIENTATION DIAGRAM

ONE - GIRDER - 4G4A (DEV)

FOR FIELD SPLICE & STANDARD DETAILS SEE X SHEETS
FOR CAMBER DIAGRAM SEE SHEET C1
FOR FLANGE DIAGRAM SEE SHEET F1
FOR GENERAL NOTES SEE SHEET GN1

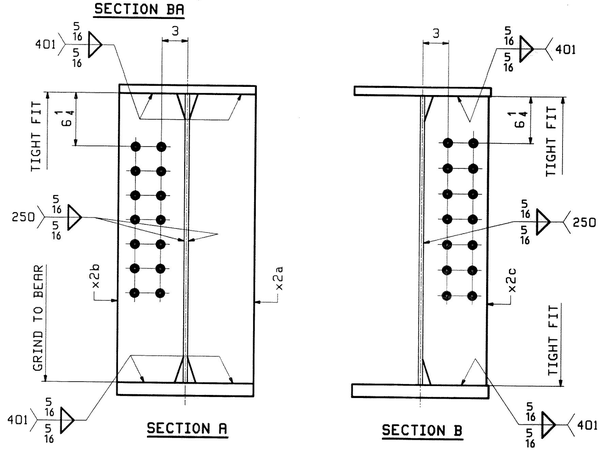

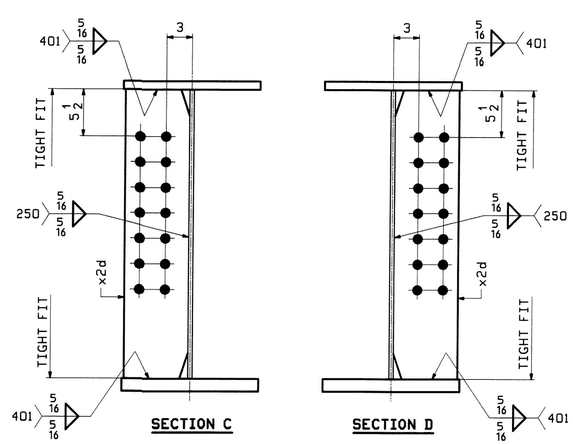

NOTE A:
NO PAINT BOTTOM AND EDGES OF BOTTOM FLANGE.

SHOP DRAWINGS ARE REVIEWED FOR:
CONFORMANCE WITH DESIGN CONCEPT: ANY
REVISE AS NOTED: X
RESUBMIT WITH NO REVIEW: AS NOTED: X
REVISE AND RESUBMIT: Stantec
NOT REQUIRED:
DATE: 2/9/10
SIGNATURE:
REVIEW BY STANTEC IS FOR THE SOLE PURPOSE OF ASCERTAINING GENERAL CONFORMITY WITH DESIGN. CONTRACTOR IS RESPONSIBLE FOR DIMENSIONS, FABRICATION AND CONSTRUCTION METHODS, COORDINATION OF SUB-TRADES, DETAIL DESIGN OF COMPONENTS AND ERRORS OR OMISSIONS ON SHOP DRAWINGS.

REV.	DATE	REMARKS	DWN	CHK	APVL	SHOP
0					JAN 2 5 2010	

MATERIAL:	SURFACE PREP. & PAINT:	HOLES:	SHOP BOLTS:
M270-50W (UN)	SEE GN1	$\frac{15}{16}$"Ø U.N.	NONE

DESCRIPTION: GIRDER - 4G4A

CASCO BAY STEEL STRUCTURES, INC.
75 SPRING HILL ROAD SACO, MAINE 04072
PHONE (207) 282-7360 FAX. (207) 282-1179
TENSOR 2945

STRUCTURE: U.S. 5 over I-91 Bridge No. 19A Putney County of Windham	DRAWN: WJF	DATE: 01/08
	CHKD: DO	DATE: 01/13
LOCATION: Putney	JOB NO.	DWG NO.
PROJ NO. IM 091-1(31)	438	4
CUSTOMER: VT AOT		REV.