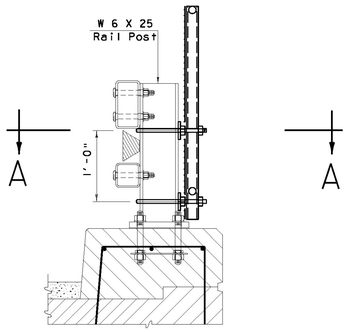

TYPICAL SECTION

NOTE: FOR DIMENSIONS SEE SHEETS BR1 & BR2.

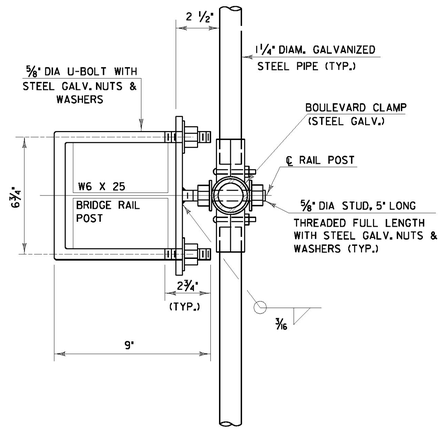

SECTION A-A

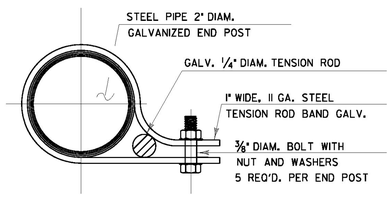

TENSION ROD BAND

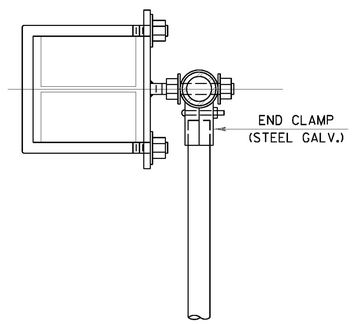

PLAN VIEW AT END POST

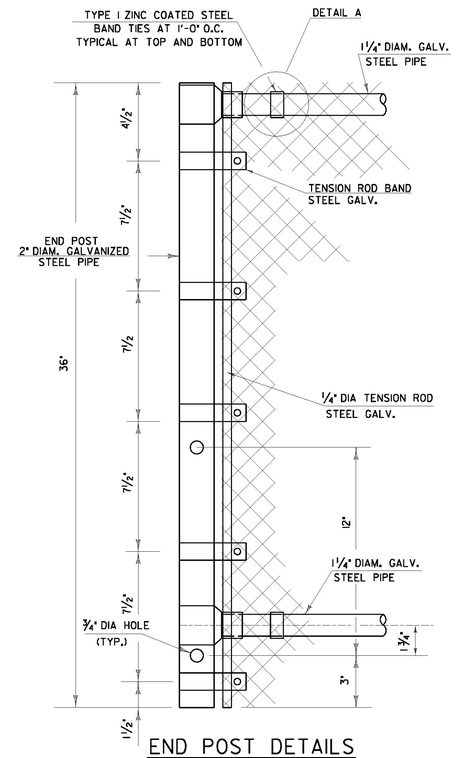

END POST DETAILS

NOTES

1. THREADS OF STUDS AND U-BOLTS TO BE 5/8-11 UNC.
2. ALL CONNECTION PLATES TO BE GALVANIZED AFTER FABRICATION.
3. 1 1/4" PIPE LENGTH SHALL BE FIELD CUT TO FIT POST SPACING.
4. CHAIN LINK FABRIC TO BE KNUCKLED TOP AND BOTTOM.
5. ALL BOLTS, THREADED STUDS AND WASHERS SHALL CONFORM TO THE SPECIFICATIONS FOR AASHTO M-164, TYPE 1. NUTS SHALL CONFORM TO AASHTO M-291.
6. ALL STEEL PLATES SHALL CONFORM TO THE SPECIFICATION FOR AASHTO M270 GRADE 36.
7. ALL GALVANIZING SHALL CONFORM TO THE REQUIREMENTS OF AASHTO M-181 WITH HARDWARE AND FITTINGS CONFORMING TO THE REQUIREMENTS OF AASHTO M-111 OR AASHTO M-232 WHICHEVER IS APPLICABLE. ALL BOLTS, NUTS AND WASHERS SHALL BE EITHER HOT-DIP GALVANIZED IN ACCORDANCE WITH THE ABOVE AASHTO REQUIREMENTS OR MECHANICALLY GALVANIZED USING A MECHANICALLY DEPOSITED PROCESS CONFORMING TO THE REQUIREMENTS OF AASHTO M-298, CLASS 110.
8. GALVANIZED CHAIN-LINK FABRIC SHALL BE TYPE 1 (ZINC) CLASS D AS SPECIFIED IN AASHTO M-181.
9. SNOW BARRIER SHALL BEGIN AT THE BRIDGE RAIL POST WHICH WILL PROVIDE A MINIMUM DISTANCE OF 20' (AS SHOWN) OR AS DIRECTED BY THE ENGINEER.
10. ALL REFERENCES TO THE DIAMETERS OF GALVANIZED STEEL PIPE SHALL REFER TO THE OUTSIDE DIAMETER (O.D.).
11. ALL POSTS, RAILS AND HARDWARE SHALL BE ZINC COATED AND CONFORM TO THE REQUIREMENTS OF AASHTO M-181, GRADE 1 OR GRADE 2.

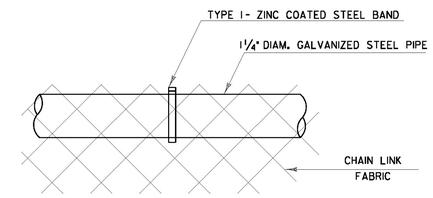

DETAIL A

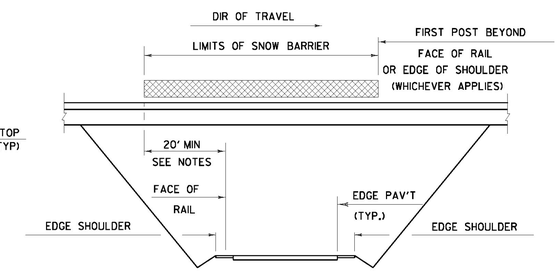

SCHEMATIC SNOW BARRIER LIMITS

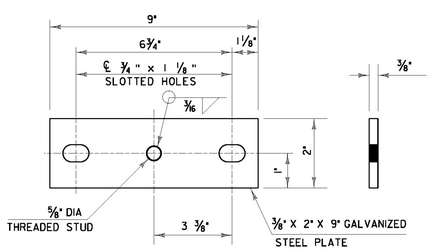

PLATE DETAILS

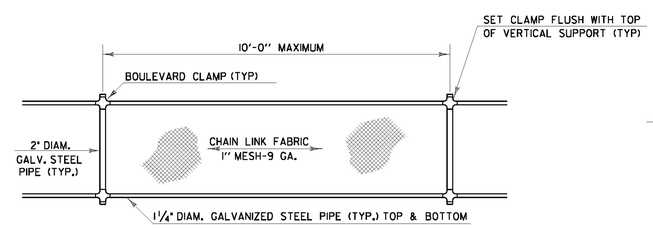

ELEVATION SNOW BARRIER

STATE OF VERMONT
AGENCY OF TRANSPORTATION

Town Of	PUTNEY	Bridge No.	19A
Highway No.	U.S. ROUTE 5	Log Sta. / Surv. Sta.	
U.S. ROUTE 5 OVER I-91			
SNOW FENCE FOR NETC 2 RAIL			
Designed By VTRANS		Drawn By VTRANS	
Checked By T. KNIGHT	Date 06/09	Bridge Design Supervisor G. BOGUE	Date 06/09
PROJECT	PUTNEY	PROJECT NO.	NH F019-1(5)
CAD Drawing Name:	...\52 z93a148bra114.dgn	Plot Date: 7/8/2009	
Bridge Sheet No.		Sheet 52 of 75	

Stantec