SHOP BILL

JOB NO. 438 | DRG. NO. M1

ABM INFO PAGE	ABM INFO LINE	NO.	DESCRIPTION	FT	IN	ASSEM. MARK	SHIPPING MARK	REMARKS	WEIGHT
		1	DOWNSPOUT	5	6+		DS1		—
		1	DO	5	6±		DS2		—
		1	TS8x8x¼	11	0½	SHOP		ASTM A500-A501	
		4	BAR 4x⅜	2	7		SA1	BEND.	
		8	¾φ EXP BOLT		9		FIELD	W/N&W.	

PAY ITEM: 506.60 "STRUCT. STEEL"

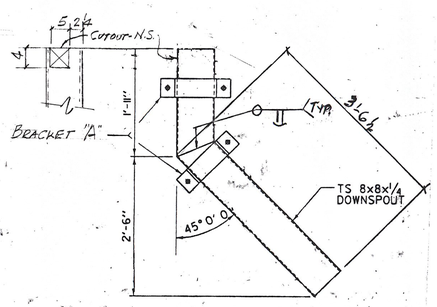

DS1 - ONE REQ'D. @ ABUT. #1

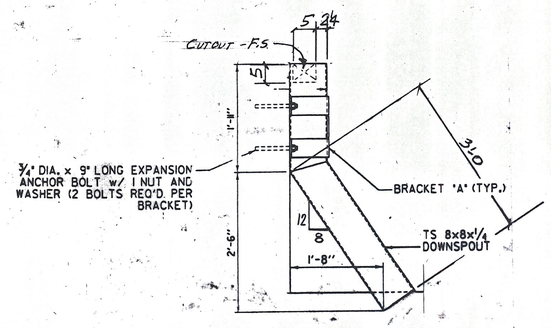

DS2 - ONE REQ'D. @ ABUT. #2

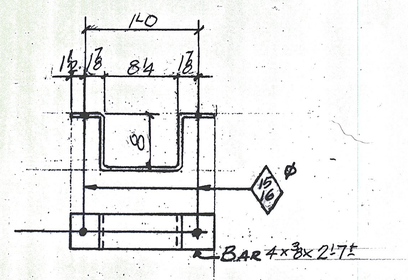

SA1 - 4 REQ'D

SHOP DRAWINGS ARE REVIEWED UNLESS NOTED OTHERWISE
NO EXCEPTION TAKEN
REVISE AS NOTED (RESUBMISSION NOT REQUIRED)
REVISE AS NOTED (RESUBMISSION REQUIRED)
REJECTED
Stantec
DATE 9/22/10
SIGNATURE
REVIEW BY STANTEC IS FOR THE SOLE PURPOSE OF ASCERTAINING GENERAL CONFORMITY WITH DESIGN. CONTRACTOR IS RESPONSIBLE FOR DIMENSIONS, FABRICATION AND CONSTRUCTION METHODS, COORDINATION OF SUB-TRADES, DETAIL DESIGN OF COMPONENTS, AND ERRORS OR OMISSIONS ON SHOP DRAWINGS.

OUT FOR APPROVAL	4/14/10									
OUT FOR APPROVAL										
ISSUED TO SHOP										
FIELD & OFFICE										

REV.	REMARKS	DATE	DWN	CHK	APP	Q.A.	NO.	DIA.	LGT	TYPE	WASHER

PROJECT NO. IM 091-1(31) STATE PROJECT NO. BRIDGE NO. 19A

MATERIAL: AASHTO M270-50W | ELECTRODES: SEE PROC | HOLES: AS NOTED. | SHOP BOLTS: —

SURFACE PREP. & PAINT:

GALVANIZE PER SUBSECT. 506.15

DESCRIPTION: DOWNSPOUTS - ABUT'S. #1 & #2

JOB: U.S. ROUTE 5 OVER I 91, PUTNEY, VERMONT

	DRAWN BY	DATE
	JPF	3-10
	CHKD BY	
	CR	
	APPROV BY	
	Q.A.	

CUSTOMER: J.A. McDONALD.

CASCO BAY STEEL STRUCTURES, INC.
75 SPRING HILL ROAD SACO, MAINE 04072
PHONE (207) 282-7360 FAX. (207) 282-1179

JOB NO. 438 | DRG. NO. M1 | REV. △

1" = 1'-0