ABM INFO PAGE	LINE	NO.	DESCRIPTION	FT	IN	ASSEM. MARK	SHIPPING MARK	REMARKS	WEIGHT
			SHOP BILL					JOB NO. 048	DRG. NO. 1-X
		18	SCUPPERS	9	4±		SC1-R		—
		18	TS 8x8x¼	8	9	f1			
		144	BAR 4x⅜	1	3½	b1			
		36	BAR 3½x¼	1	4	b2			
		36	PL 4x5⅜	1	3½	b3		BEND	
		36	BAR 1¼x¼	1	2½	b4			
		54	½"ϕ BAR	1	2½	r1			
		18	PL 4x7½		7±	p1			
		18	DO	1	4½±	p2			
		36	PL 4x4½	1	11±	p3			
		36	STRAP ASS'Y	1	9±		ST1-R		—
		36	BAR 3x⅜	2	6½	b5		BEND	
		36	DO	1	9±	b6		BEND	
		72	¾"ϕ BOLTS (GALV)		2¼	SHOP		W/NUT-WASH & LOCK WASH	
		72	DO		2		FIELD	DO	

PAY ITEM 506.60
EXTRA

SHOP DRAWING REVIEW

REVIEWED AS REQUIRED BY THE CONSTRUCTION CONTRACT DOCUMENTS AND APPROVED, BUT ONLY FOR CONFORMANCE TO THE DESIGN CONCEPT OF THE WORK, AND SUBJECT TO FURTHER LIMITATIONS AND REQUIREMENTS CONTAINED IN THE CONSTRUCTION CONTRACT DOCUMENTS.

☐ REJECTED ☐ REVISE AND RESUBMIT ☐ RESUBMIT AS CORRECTED

CORRECTIONS OR COMMENTS MADE ON THE SHOP DRAWING DURING THIS REVIEW DO NOT RELIEVE CONTRACTOR FROM COMPLIANCE WITH REQUIREMENTS OF THE WORK AND THE CONTRACT DOCUMENTS. THIS REVIEW IS ONLY FOR THE PURPOSE OF CHECKING FOR CONFORMANCE WITH THE DESIGN CONCEPT OF THE PROJECT AND COMPLIANCE WITH THE INFORMATION GIVEN IN THE CONTRACT DOCUMENTS. THE CONTRACTOR IS RESPONSIBLE FOR QUANTITIES AND DIMENSIONS, CORRELATING ALL QUANTITIES AND DIMENSIONS, SELECTING FABRICATION PROCESSES AND TECHNIQUES OF CONSTRUCTION, COORDINATING WITH OTHER TRADES AND PERFORMING THE WORK IN A SAFE AND SATISFACTORY MANNER.

VHB Vanasse Hangen Brustlin, Inc. Engineers, Planners, and Scientists, Six Bedford Farms, Route 114, Bedford, NH 03110 603 644 2888

Job Number: 50699
Reviewed By: KRC
Date: 2/15/00

REV.	REMARKS	DATE	DWN	CHK	APP	Q.A.	NO.	DIA.	LGT	TYPE	WASHER
OUT FOR APPROVAL		3-1-00									
OUT FOR APPROVAL											
ISSUED TO SHOP											
FIELD & OFFICE											

PROJECT NO. IR-089-1 (13) STATE PROJECT NO. 11N & 11S

MATERIAL: AASHTO-M270 GR. 36 ELECTRODES: PER PROC HOLES: 13/16" ϕ SHOP BOLTS:

SURFACE PREP. & PAINT:

GALV. AFTER FAB. PER ASTM-A-123 (AASHTO-M-111)

DESCRIPTION: REVISED SCUPPERS (SB)

JOB: I-89-NB & SB OVER WHITE RIVER, VT. 14 & NECR HARTFORD, VT.

CUSTOMER: WINTERSET INC.

	DRAWN BY	DATE
	JPF	1-00
CHKD BY		
APPROV BY		
Q.A.		

CASCO BAY STEEL STRUCTURES, INC.
5 INDUSTRY ROAD SOUTH PORTLAND, ME. 04106
PHONE (207) 772-2533 FAX. (207) 772-0580

JOB NO.	DRG. NO.
048	1-X
115	REV. △

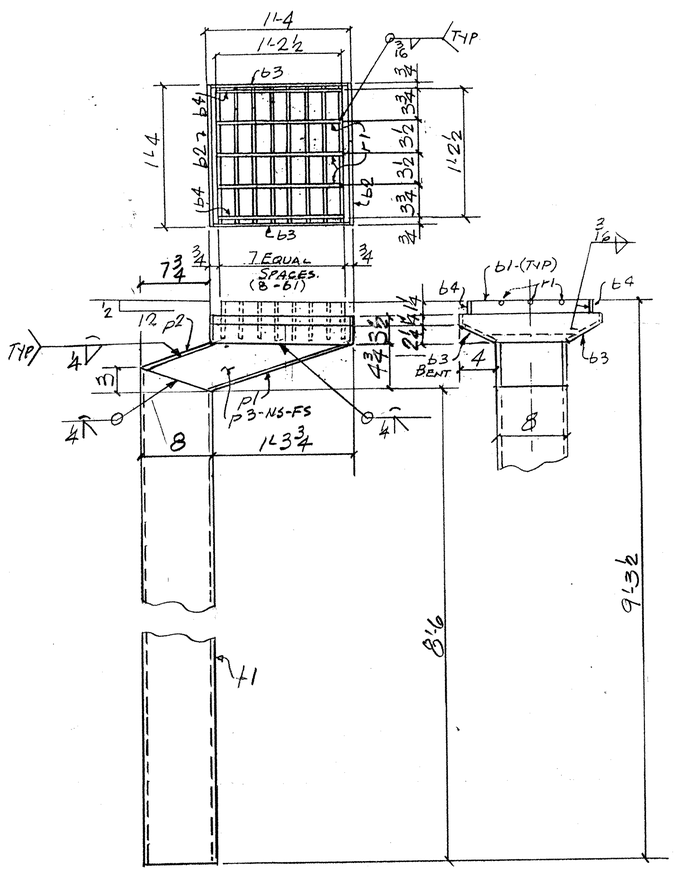

SC1-R-18-REQ'D

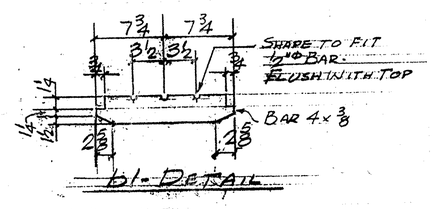

b1-DETAIL

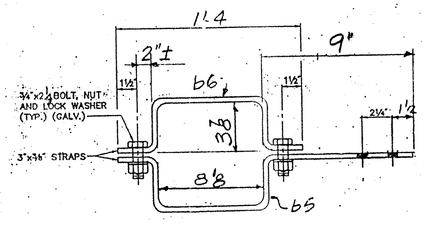

STRAPS-ST1-R-36-REQ'D.

REVISED SCUPPERS FOR SB Bridge