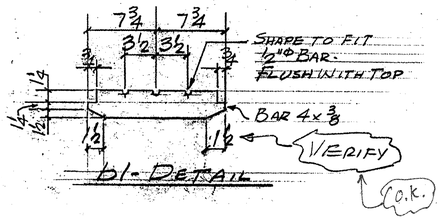

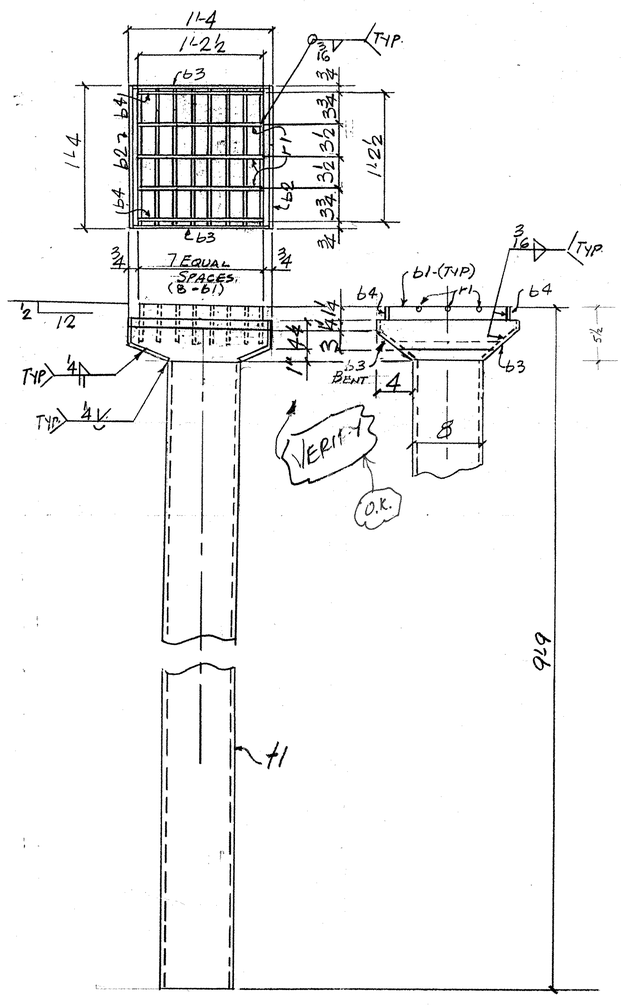

SCUPPERS-SC1-36-REQ'D.

18 @ BRIDGE-11N

18 @ BRIDGE-11S

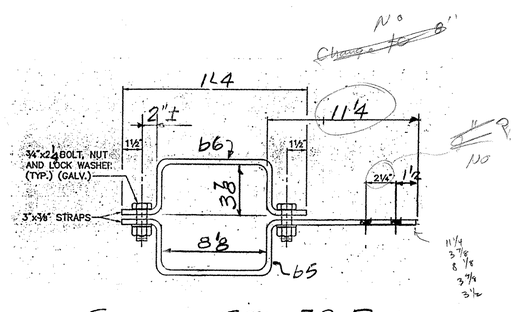

STRAPS-ST1- 72 REQ'D.

36 @ BRIDGE-11N

36 @ BRIDGE-11S

AGM INFO		SHOP BILL						JOB NO. 048	DRG. NO. 1
PAGE	LINE	NO.	DESCRIPTION	FT	IN	ASSEM. MARK	SHIPPING MARK	REMARKS	WEIGHT
		36	SCUPPERS	9	9		SC1		—
			36 TS 8x8x4	9	2¾	±1		A500 Gr A501	
			288 BAR 4x⅜	1	3½	b1			
			72 PL 4x 8¼	1	4	b2		BEND	
			72 PL 4x 7	1	3½	b3		BEND	
			72 BAR 1/4x4	1	2½	b4			
			108 ½"ϕ BAR	1	2½	r1			
		72	STRAP ASS'Y	1	4±		ST1		—
			72 BAR 3x⅜	2	6½	b5		BEND	
			72 DO	1	11	b6		BEND	
			144 ¾"ϕ BOLTS (GALV)		2¼			W/NUT-WASH & LOCK WASH	
			144 DO		2		FIELD	DO	

PAY ITEM 506.60

SHOP DRAWING REVIEW

✓ REVIEWED AS NOTED BY THIS CONSTRUCTION CONTRACT DOCUMENTS AND APPROVED, BUT ONLY FOR CONFORMANCE TO THE DESIGN CONCEPT OF THE WORK, AND SUBJECT TO FURTHER LIMITATIONS AND REQUIREMENTS CONTAINED IN THE CONSTRUCTION CONTRACT DOCUMENTS.

☐ REJECTED ☐ REVISE AND RESUBMIT ☐ FURNISH AS CORRECTED

CORRECTIONS OR COMMENTS MADE ON THE SHOP DRAWINGS DURING THIS REVIEW DO NOT RELIEVE CONTRACTOR FROM COMPLIANCE WITH REQUIREMENTS OF THE DRAWINGS AND SPECIFICATIONS. THIS CHECK IS ONLY FOR THE PURPOSE OF GENERAL CONFORMANCE WITH THE DESIGN CONCEPT OF THE PROJECT AND GENERAL COMPLIANCE WITH THE INFORMATION GIVEN IN THE CONTRACT DOCUMENTS. THE CONTRACTOR IS RESPONSIBLE FOR CONFIRMING AND CORRELATING ALL QUANTITIES AND DIMENSIONS, FABRICATION PROCESSES AND TECHNIQUES OF CONSTRUCTION, COORDINATING THE WORK WITH THAT OF ALL OTHER TRADES, AND PERFORMING THE WORK IN A SAFE AND SATISFACTORY MANNER.

VHB Vanasse Hangen Brustlin, Inc. Engineers, Planners, and Scientists Six Bedford Farms, Khoury Rd., Bedford, NH 03102 603-644-0888

Job Number: 50699
Reviewed By: JAR
Date: 3-26-99

REV.	REMARKS	DATE	DWN	CHK	APP	Q.A.	NO.	DIA.	LGT	TYPE	WASHER
OUT FOR APPROVAL		3/23/99									
OUT FOR APPROVAL											
ISSUED TO SHOP											
FIELD & OFFICE											

PROJECT NO. IR-089-1(13) STATE PROJECT NO. 11N & 11S

MATERIAL: AASHTO M270 GRADE 36 ELECTRODES: PER PROC HOLES: 13/16" ϕ SHOP BOLTS:

SURFACE PREP. & PAINT:

GALV. AFTER FAB. PER ASTM-A-123 (AASHTO-M-111)

DESCRIPTION: SCUPPERS

JOB: I-89 NB & SB OVER WHITE RIVER, VT. 14 & NECR HARTFORD, VT.

CUSTOMER: WINTERSET INC.

	DRAWN BY	DATE
	JPF	2-99
	CHKD BY	
	EJ	
	APPROV BY	
	Q.A.	

Rec'd 4-27-99

CASCO BAY STEEL STRUCTURES, INC.
5 INDUSTRY ROAD SOUTH PORTLAND, ME. 04106
PHONE (207) 772-2533 FAX. (207) 772-0580

JOB NO.	DRG. NO.
048	1
104	REV. △