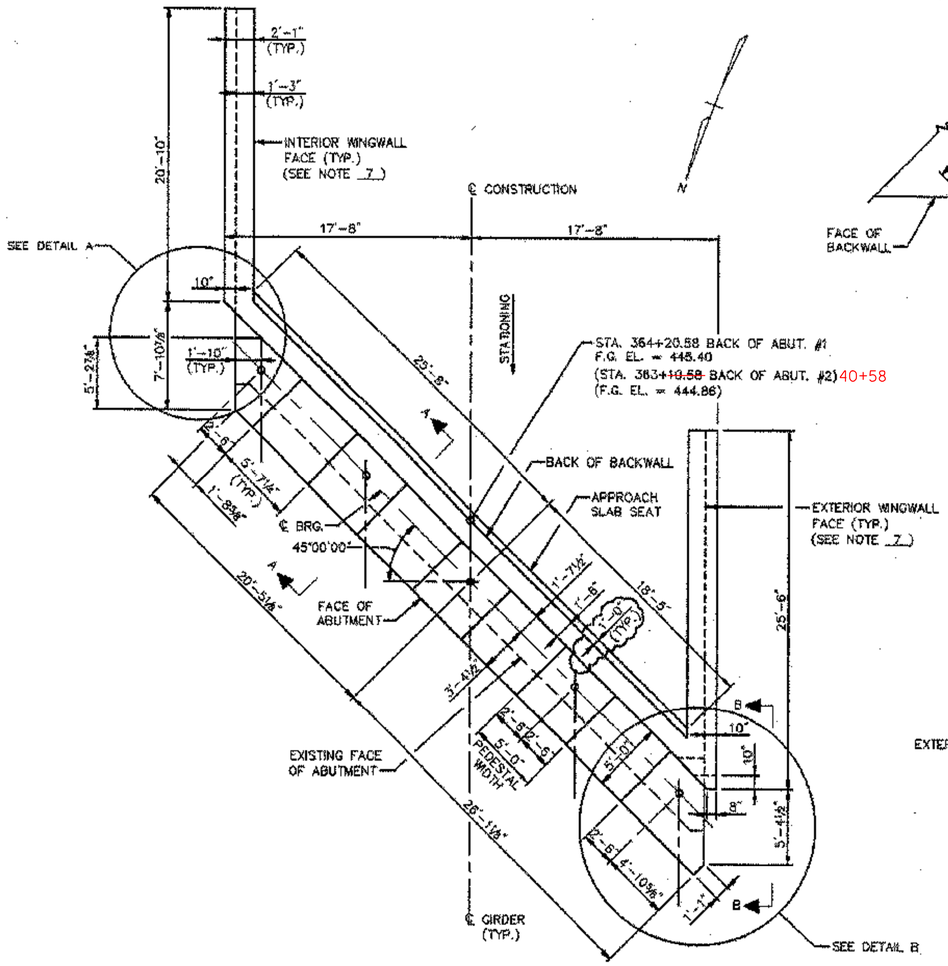

* FOOTING AND FINGER ℄ BLOCKOUT NOT SHOWN FOR CLARITY

MASONRY PLAN*

SCALE: 3/16" = 1'-0"

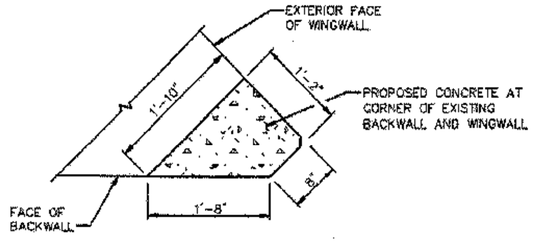

SECTION C–C

SCALE: 1" = 1'-0"

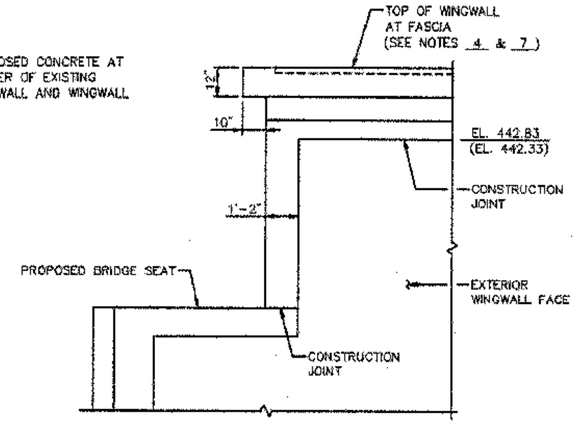

VIEW B–B

SCALE: 3/8" = 1'-0"

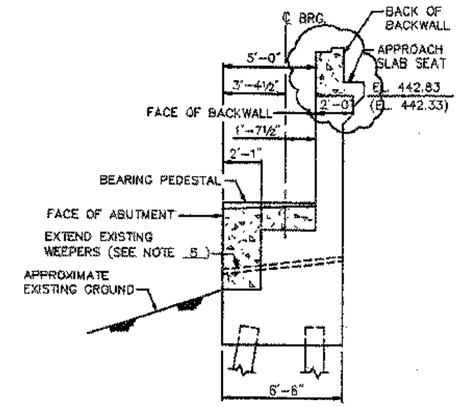

SECTION A–A

SCALE: 1/4" = 1'-0"

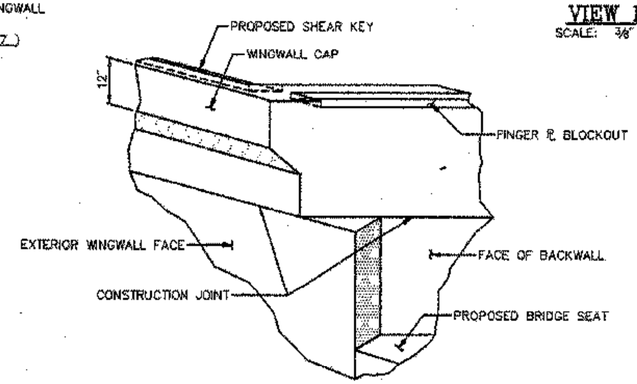

DETAIL A

N.T.S.

NOTES:

1. ABUTMENT 1 IS SHOWN, ABUTMENT 2 IS SIMILAR.
2. PROPOSED BEARING PEDESTAL ELEVATIONS WERE CALCULATED BASED ON THE EXISTING BEARING SEAT ELEVATIONS AND BEARING HEIGHTS SHOWN IN THE ORIGINAL DESIGN PLANS. THE CONTRACTOR SHALL TAKE FIELD MEASUREMENTS AND ADJUST THE PROPOSED PEDESTAL ELEVATIONS AS NECESSARY TO MAINTAIN THE EXISTING BOTTOM OF GIRDER ELEVATIONS.
3. CONCRETE FOR ABUTMENT MODIFICATIONS SHALL BE PAID UNDER ITEM 501.22, "CONCRETE, CLASS A".
4. FOR TOP OF WINGWALL ELEVATIONS SEE TABLE ON SHEET 33.
5. THE CONTRACTOR SHALL PROVIDE A WATERTIGHT, CORROSION RESISTANT EXTENSION OF THE EXISTING WEEPERS THROUGH THE NEW ABUTMENT CONCRETE. PAY PARTICULAR ATTENTION TO ENSURE THAT THE CONNECTION FROM THE EXISTING WEEPERS TO THE PROPOSED WEEPERS IS WATERTIGHT AND PERMANENT. THE CONTRACTOR SHALL PROPOSE THE MATERIALS AND MEANS AND METHODS OF CONSTRUCTION. SUBMIT THE PROPOSED SYSTEM TO THE ENGINEER FOR APPROVAL. COST FOR EXTENDING WEEPERS SHALL BE INCLUDED IN ITEM 501.22, "CONCRETE, CLASS A."
6. SEE SHEETS 15 & 16 FOR DETAILS OF FINGER PLATES AT EXPANSION JOINT.
7. CONCRETE BRIDGE BARRIER CURB ON WINGWALLS NOT SHOWN. SEE SHEETS 32 & 33 AND 40 – 42 FOR DETAILS OF BARRIER CURB ON WINGWALLS.
8. EXCAVATION AND BACKFILLING OF EXISTING GROUND REQUIRED TO CONSTRUCT THE ABUTMENT MODIFICATIONS SHALL BE INCLUDED IN ITEM 529.20.

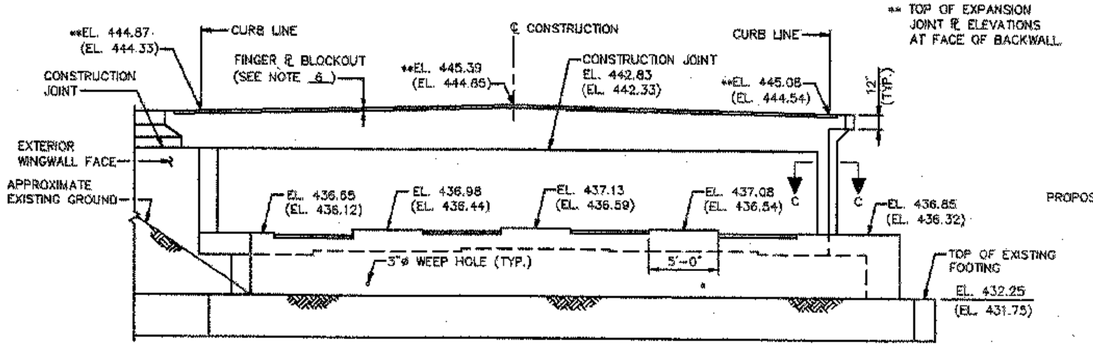

(EL. XXX.XX) ELEVATIONS AT ABUTMENT 2.

ELEVATION (NORMAL TO BACKWALL)

SCALE: 3/16" = 1'-0"

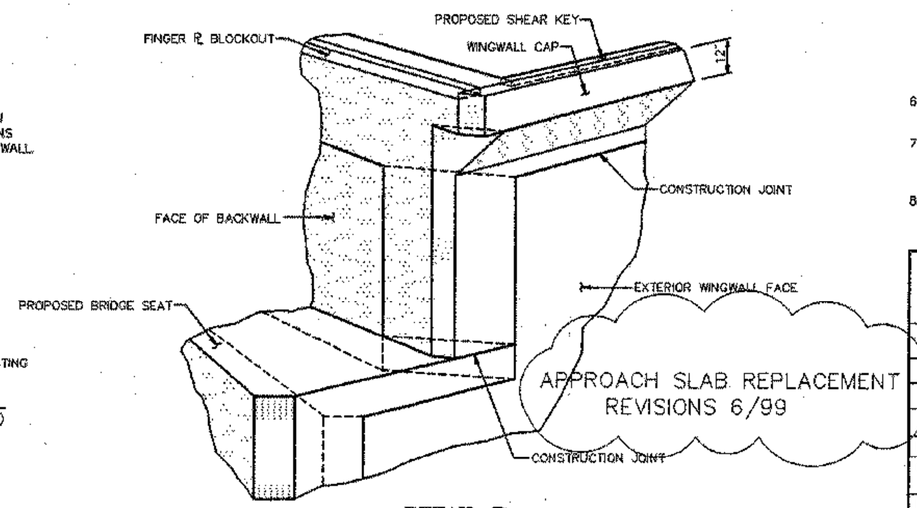

DETAIL B

N.T.S.

VANASSE HANGEN BRUSTLIN, INC.

STATE OF VERMONT
AGENCY OF TRANSPORTATION

Town Of HARTFORD	Bridge No. 11N & 11S
Highway No. I-89 NB & SB	Log Sta.
	Surv. Sta.

I-89 NB & SB OVER WHITE RIVER, VT 14 & NECR

ABUTMENT 1 & 2 MODIFICATIONS

Designed By S.M. HODGDON	Drawn By B.J. MASSE
Checked By T.S. BRYANT Date 9/98	Bridge Design Supervisor C.D. BAKER Date 6/99
PROJECT HARTFORD	PROJECT NO. IR 089-1(13)
VHB Cad Filename 50699A1MREV	
Bridge Sheet No. 27R	Sheet 27R of 101

PLOTTED 6/99