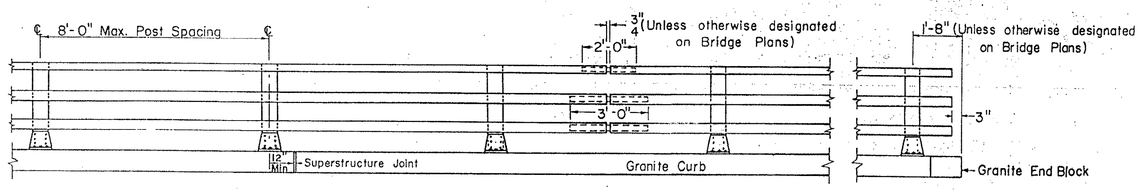

ELEVATION

Note: Rail posts are to be set normal to grade unless otherwise designated on Bridge Plans.

Allowable stresses:
Railing 21,000 p.s.i.
Post 17,000 p.s.i.

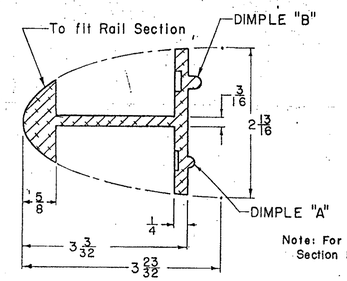

SECTION A-A

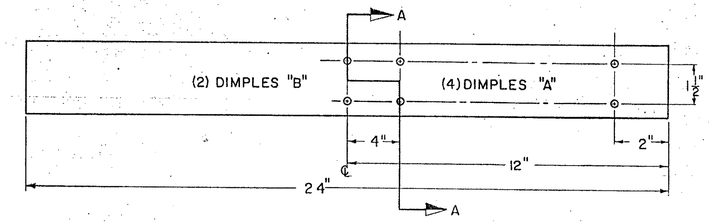

Note: For details of Dimples see Section B-B, SB-RI-64, Sheet 2 of 2.

ELEVATION

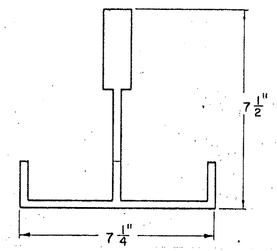

POST SECTION

HAND RAIL SPLICE DETAILS

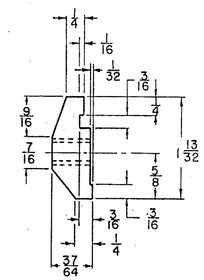

HAND RAIL POST CONNECTION

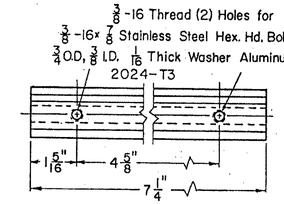

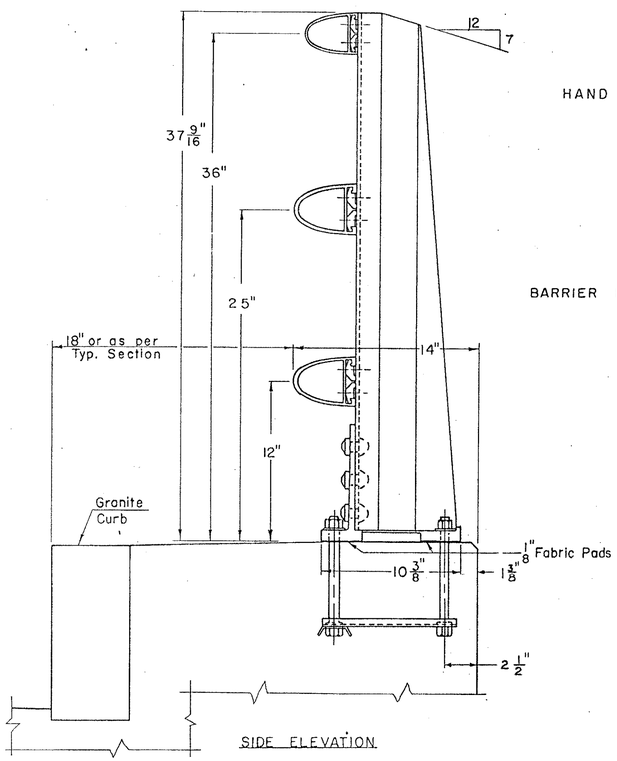

SIDE ELEVATION

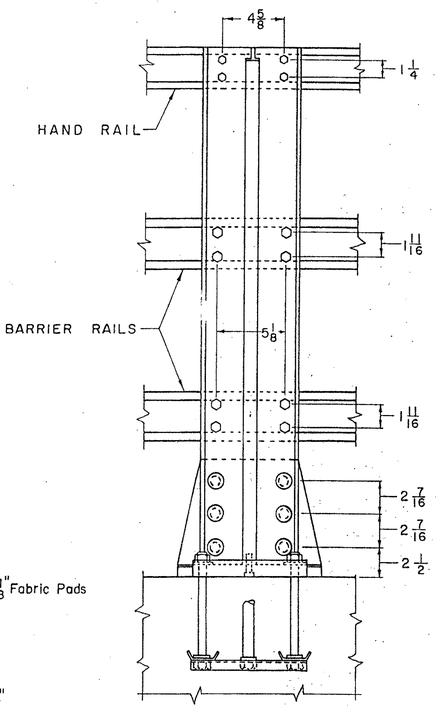

BACK ELEVATION

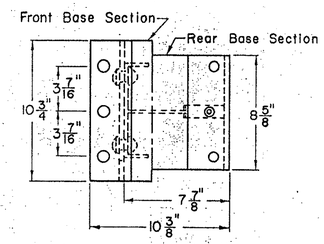

BOTTOM VIEW OF BASE

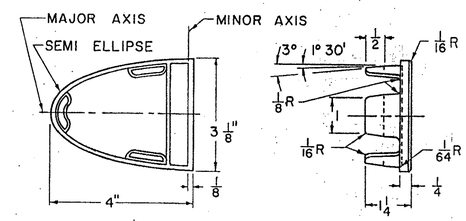

HAND RAIL END CAP

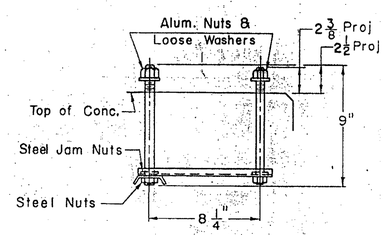

POST ANCHOR ASSEMBLY

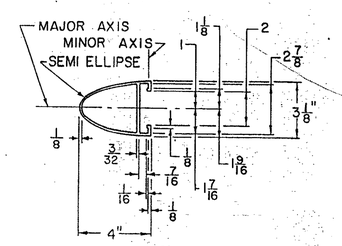

HAND RAIL SECTION

GENERAL NOTES

DESIGN SPECIFICATIONS: Designed in accordance with 1964 Interim A.A.S.H.O. Specifications and current A.S.T.M. Standards.

1. Open holes as noted.
2. Aluminum bolts shall be made from material conforming to A.S.T.M. B 211, alloy 2024-T4, and shall have an anodic coating .0002 in. minimum thickness with dichromate or boiling water seal.
3. Material for Anchor Bolts shall conform to either (a) A.S.T.M. A 276 type 430 Stainless Steel except with a minimum of 100,000 p.s.i. ultimate strength; or (b) A.S.T.M. A 325 High Strength Steel bolts with suitable nuts and plain hardened washers, galvanized in accordance with A.S.T.M. A 123.
4. Material for set screws and cap screws to be stainless steel A.S.T.M. A276.
5. Material for aluminum nuts shall be A. S. T. M. B 211 Alloy 6061- T6 or Alloy 6262-T9 with suitable lubricant. Aluminum nuts to be American Standard finished hexagon thick nuts class 2B thread. Lower steel nuts shall conform to A.S.T.M. A307. All nuts to comply with American hex. A.S.A. Spec. B 18.2.
6. Exposed ends of rail tube shall be closed with drive-in type rail end caps. Caps may be either: (a) Aluminum alloy permanent mold castings complying to A.S.T.M. Spec. B108 Alloy SG 70 A or B; or (b) Sand mold castings complying to A.S.T.M. Spec. B26 Alloy SG 70 A.
7. Weld filler wire shall be A.S.T.M. B 285, Alloy ER-5356. All welding shall be metal inert gas process.
8. End of tube sections are to be sawed or milled. Cut ends are to be true, smooth, and free from burrs or ragged edges.
9. Railing system shall be continous, with each rail section attached to a min. of three posts. Each joint in rail length shall be spliced as detailed, with splices occurring in the same panel.
10. Anchor bolts are to be preset in concrete. For spacing of railing posts see Bridge Plans.
11. Railing is to be paid for per lineal foot and the cost shall include all hardware and post connections necessary to erect railing.
12. Material for posts, post bases, splice bars, and rails shall be A. S. T. M. B 221, Alloy 6061-T6
13. Material for aluminum washers shall be A.S.T.M. B-209 Alloy Alclad 2024-T3. Material for rivets shall be A.S.T.M. B-316 Alloy 6061 heat treated to the T6 temper. Rivets shall be button head and cone point, cold driven as per drawing. Alternate rivet material shall be A.S.T.M. B221 Alloy 6061-T6
14. Material for anchor channel bars shall conform to A.S.T.M. A7 or A36.
15. All aluminum surfaces in contact with post pads shall be given 1 shop coat of zinc chromate paint.
16. Prior to fabrication shop drawings shall be submitted to the Department of Highways for approval.
17. Fabric pad shall be preformed fabric in accordance with A.A.S.H.O. Spec. 2.10.3.(K) and shall be furnished by the railing fabricator. Pads shall be two pieces each 3" wide under each post.

RAIL POST DETAILS

Revisions & Corrections

1. Barrier Rail Depth increased to 4" for 8'-0" Post Spacing. Nov. 25, 1964. W.B.T.
2. Aluminum alloys revised to current ASTM Standards, Weld filler wire added. Jan. 12, 1965. W.B.T.
3. Minor corrections to conform to manufacturer's current tooling practices. Jan. 28, 1965. W.B.T.
4. Alternate rivet material added. Mar. 23, 1965. W.B.T.
5. Alloy designations revised. Dec. 8, 1965. W.B.T.
6. Alloy 6063-T6 removed from Note 12, bolt projections increased from 1 7/8 & 2 to 2 3/8 & 2 1/2 June 21, 1966. W.B.T.

Drawn By:	WBT Oct. 1964	
Traced By:	WBT Oct. 1964	
Checked By:	W.M.S. Oct. 1964	
Recommended for Approval:	Louis M. Bazin, Bridge Engineer	10/29/64 Date
Recommended for Approval:	R. H. Crowell, Assistant Chief Engineer	10/30/64 Date
Approved:	O. D. Bishop, Chief Engineer	10/30/64 Date

ALUMINUM BRIDGE RAILING DETAILS

Revisions & Corrections (Cont.)

7. Permanent mold castings for rail end cap added. Nov. 8, 1966. W.M.S.
8. Allowable stresses in railing and post added. Dec. 5, 1966. W.M.S.
9. Optional stainless or high-strength steel anchor bolts allowed. Dec. 5, 1966. W.M.S.

THIS SHEET IS FOR INFORMATION PURPOSES ONLY

HARTFORD - SHARON - ROYALTON
IM 1R (89) - 1(8)

STATE OF VERMONT
DEPARTMENT OF HIGHWAYS
STANDARD STRUCTURES

SB-RI-64

Sheet 1 of 2

Bridge Sheet No. BR 170 Sheet 127 of 260