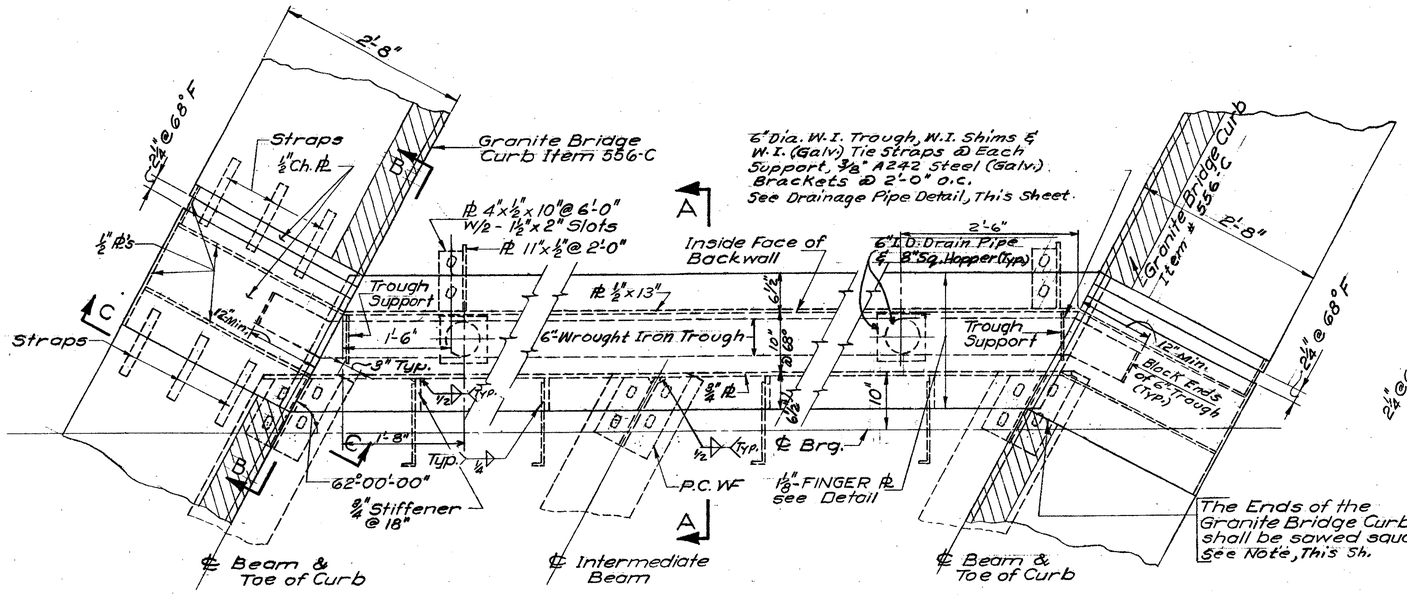

Note:
The Expansion Dam is to be Furnished in Two Sections With Separate Brackets @ The Center Beam.

PLAN - EXPAN. ASSEMBLY

Scale 1" = 1'-0"

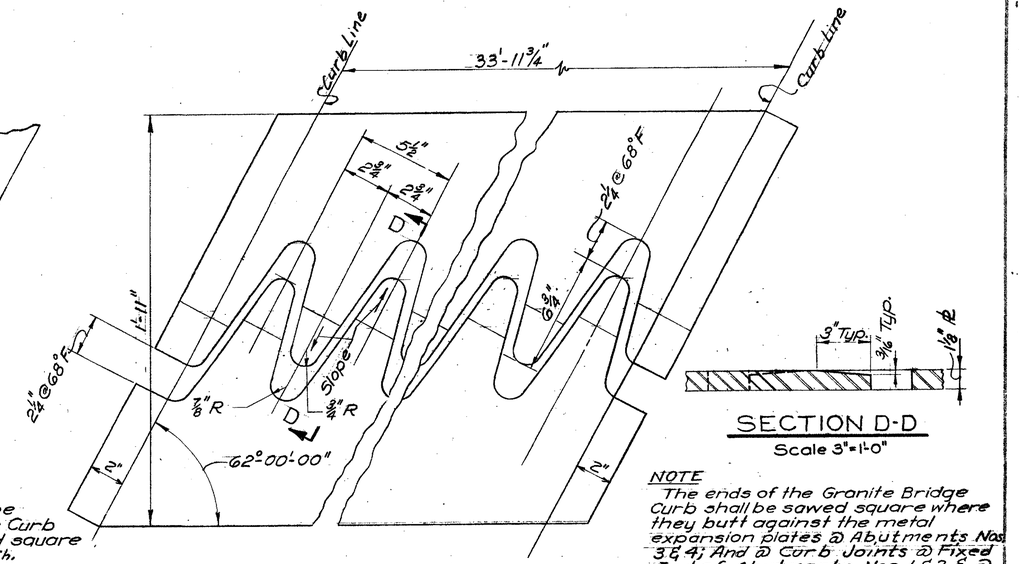

FINGER PLATE DETAIL

Scale 3" = 1'-0"

SECTION D-D

Scale 3" = 1'-0"

NOTE
The ends of the Granite Bridge Curb shall be sawed square where they butt against the metal expansion plates @ Abutments Nos. 3 & 4; And @ Curb Joints @ Fixed End of Abutments Nos. 1 & 2 & @ All Piers Where Item 372-C is Being Used.
See Curb & Rail Plan & Curb & Joint Details, Sh. # BR-109.

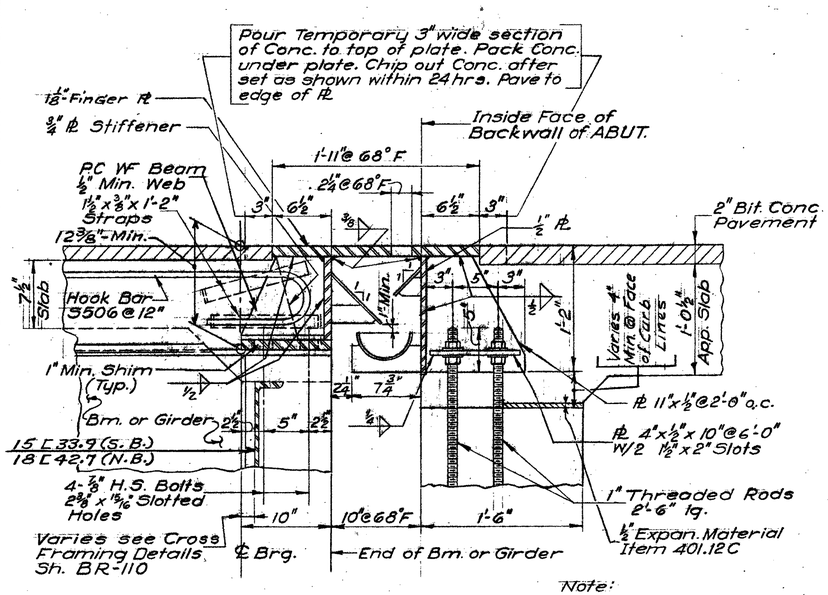

SECTION A-A

Scale 1½" = 1'-0"

Note:
For add'tl. Trough details see Section B-B

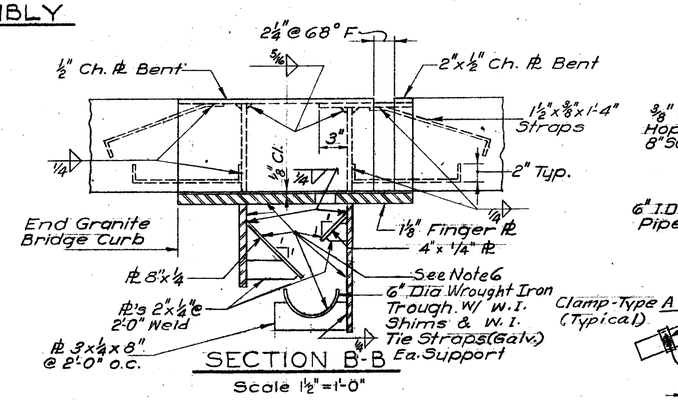

SECTION B-B

Scale 1½" = 1'-0"

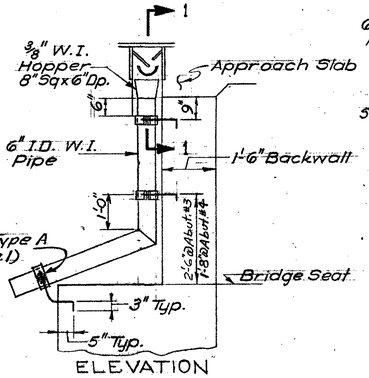

ELEVATION

DRAINAGE PIPE DETAIL

Scale ½" = 1'-0"

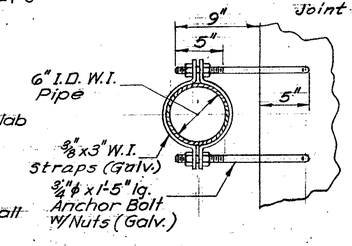

CLAMP DETAIL TYPE A

Scale 1½" = 1'-0"

BR # 16NB & 16B

NOTES CONTINUED:

6. THREE (3) COATS OF PAINT (IN ACCORDANCE WITH ITEM 404.030, SHALL BE APPLIED TO THE INTERIOR SURFACES OF EXPANSION DAM PRIOR TO ERECTION.

NOTES

1. FOR GENERAL NOTES SEE SH. # BR-100.
2. ALL PARTS OF THE EXPANSION JOINT ASSEMBLY WHICH ARE EXPOSED TO WATER AFTER ERECTION SHALL BE ASTM A242 STEEL. PLATES COMPETELY EMBEDDED IN CONCRETE MAY BE ASTM A36 STEEL.
3. FOR DETAILS OF GRANITE BRIDGE CURB SEE STD. SH SCB-D6-65, DETAIL A.
4. USE ¼" WELDS FOR CONNECTING PLATES & BRACKETS FOR 6" DIA. TROUGH.
5. FINGERS TO BE SYMMETRICAL ABOUT ℄ OF FINGER PLATE. FLAME CUT FROM 21" X 1⅛" PLATE.

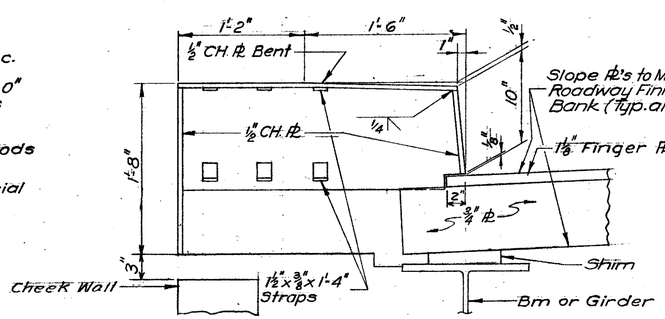

SECTION C-C

Scale 1½" = 1'-0"

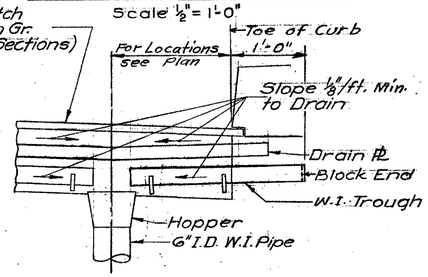

SECTION 1-1

~~No Scale~~

THIS SHEET IS FOR INFORMATION PURPOSES ONLY
HARTFORD-SHARON-ROYALTON IM IR 089-1(8)

PROJECT SHARON
TOWN OF SHARON
ROUTE No. I-89 STA. 742 + 50
I - 89 OVER T.H. 17 AND FAY BROOK
EXPANSION DAM PLAN & DETAILS AT ABUT. # 3 & 4
SCALE AS SHOWN
ARNOLD D. KATZ

SCHOENFELD
210 S
BOSTON 11, MASS.

Bridge Sheet No. BR153 Sheet 110 of 260

Stage 1 Construction