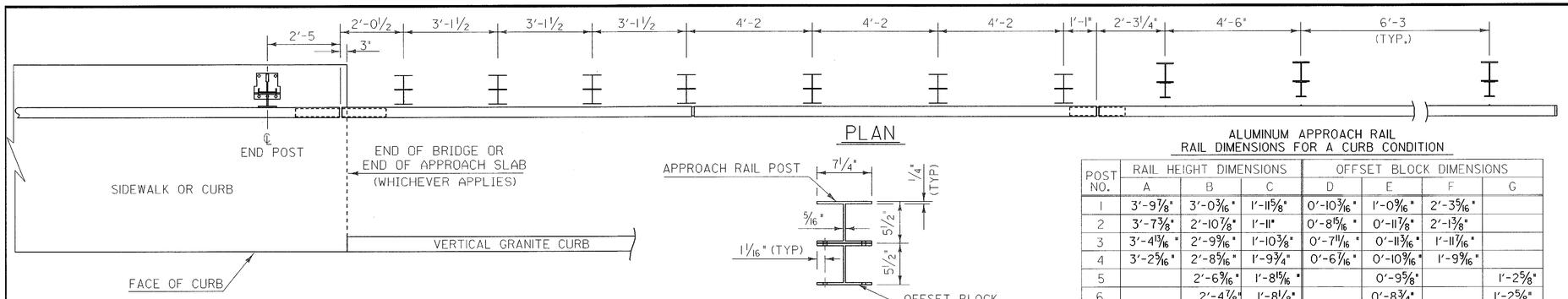


PLAN




PLAN

## ALUMINUM APPROACH RAIL
## RAIL DIMENSIONS FOR A CURB CONDITION

| POST NO. | RAIL HEIGHT DIMENSIONS | | | OFFSET BLOCK DIMENSIONS | | | |
|---|---|---|---|---|---|---|---|
| | A | B | C | D | E | F | G |
| 1 | 3'-9⅞" | 3'-0 3/16" | 1'-11⅝" | 0'-10 3/16" | 1'-0 9/16" | 2'-3 5/16" | |
| 2 | 3'-7⅜" | 2'-10⅞" | 1'-11" | 0'-8 15/16" | 0'-11⅞" | 2'-1⅜" | |
| 3 | 3'-4 13/16" | 2'-9 9/16" | 1'-10⅜" | 0'-7 11/16" | 0'-11 3/16" | 1'-11 7/16" | |
| 4 | 3'-2 5/16" | 2'-8 5/16" | 1'-9¾" | 0'-6 7/16" | 0'-10 9/16" | 1'-9 9/16" | |
| 5 | | 2'-6 9/16" | 1'-8 15/16" | | 0'-9⅝" | | 1'-2⅝" |
| 6 | | 2'-4⅞" | 1'-8⅛" | | 0'-8¾" | | 1'-2⅝" |
| 7 | | 2'-3⅛" | 1'-7¼" | | 0'-7⅞" | | 1'-0⅞" |

ALL REMAINING POSTS ARE TO HAVE THE SAME DIMENSIONS AS POST NO. 7

## NOTES

1. POSTS 1 THROUGH 7 SHALL BE EXTRUDED ALUMINUM.
2. ALL STRUCTURAL STEEL SHALL BE AASHTO M270 GRADE 36 GALVANIZED AFTER FABRICATION.
3. ALL ITEMS NOT OTHERWISE INDICATED SHALL MEET THE SPECIFICATION REQUIREMENTS OF THE STANDARD SHEETS ON WHICH THEY ARE DETAILED.
4. SEE STANDARD G-1 FOR STEEL BEAM GUARD RAIL DETAILS. SEE SHEETS BR 165 AND BR 167 FOR THE EXISTING ALUMINUM BRIDGE RAILING DETAILS.
5. THE COST OF ALL MATERIALS AND LABOR FOR THE SPLICE BETWEEN THE ALUMINUM APPROACH RAILING AND THE STEEL BEAM GUARD RAIL SHALL BE SUBSIDIARY TO ITEM 621.74, ALUMINUM APPROACH RAILING.
6. DETAILS ARE SHOWN FOR TRANSITION TO THE EXISTING 3 RAIL ALUMINUM BRIDGE RAILING.
7. DIMENSIONS SHOWN ARE FROM A REFERENCE LINE AT THE FACE OF POST FOR A NORMAL CROWNED SECTION. APPROPRIATE CORRECTIONS SHALL BE MADE FOR CROSS SLOPES OTHER THAN A NORMAL SECTION.

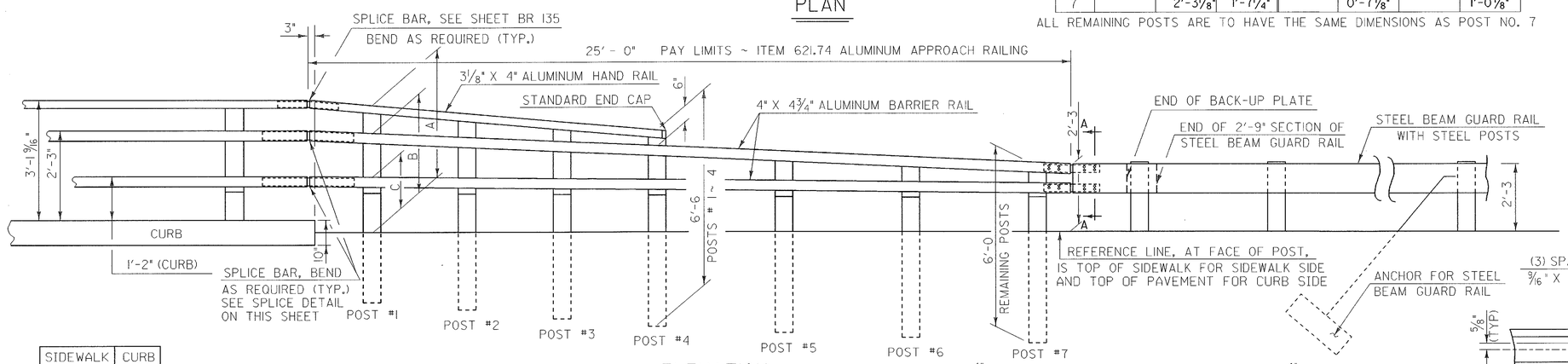


ELEVATION

| | SIDEWALK SIDE | CURB SIDE |
|---|---|---|
| "X" | | 13/16" |
| "Y" | | 7/16" |
| "Z" | | 3/16" |

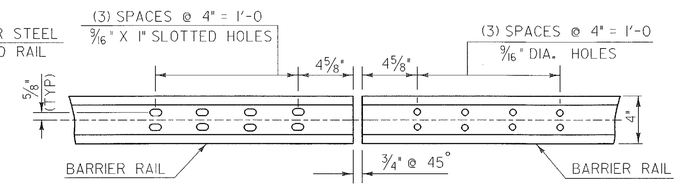


ELEVATION OF BARRIER RAIL (FROM BACK)
AT ALL INTERMEDIATE RAIL SPLICES

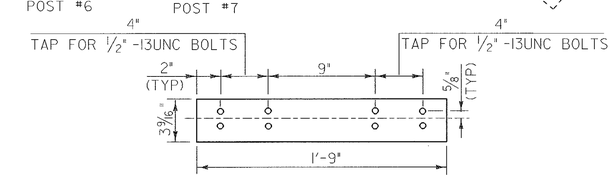


ELEVATION OF BARRIER RAIL SPLICE BAR
TO BE USED AT TRANSITION BETWEEN
APPROACH RAIL & GUARD RAIL (FROM BACK)

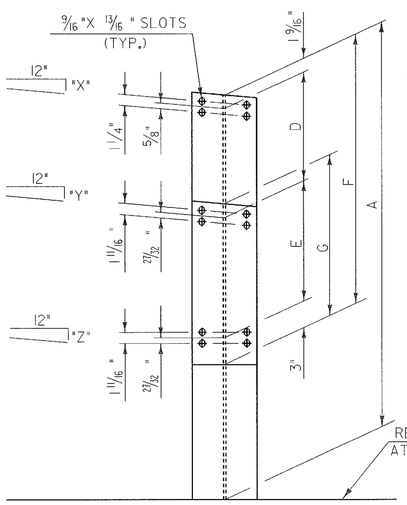


FRONT ELEVATION

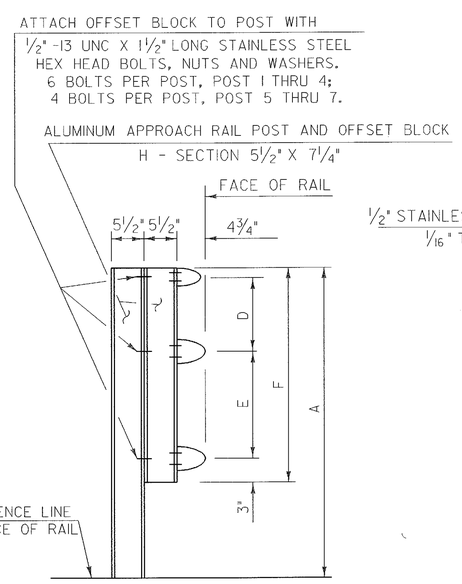


SIDE ELEVATION

APPROACH RAIL DETAILS

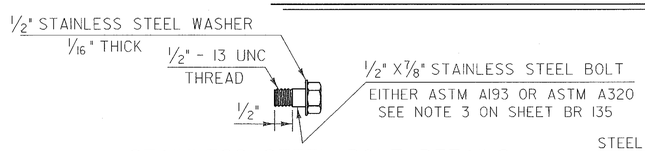


STAINLESS STEEL BOLT DETAILS

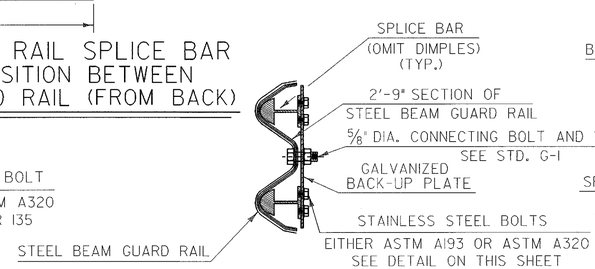


SECTION A-A

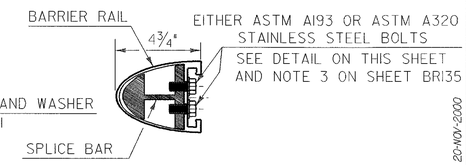


TYPICAL SECTION THROUGH
BARRIER RAIL SPLICE

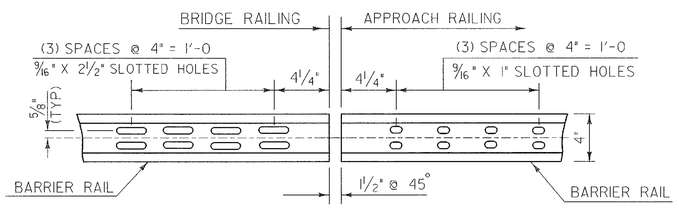


ELEVATION OF BARRIER RAIL (FROM BACK)

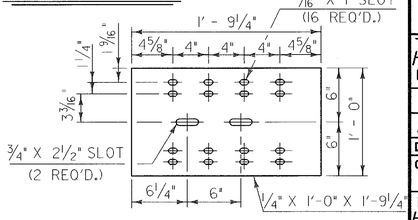


BACK-UP PLATE DETAILS

# STATE OF VERMONT
## AGENCY OF TRANSPORTATION

| | |
|---|---|
| Town Of HARTFORD-SHARON-ROYALTON | Bridge No. 10 & 21 |
| Highway No. 189 | Log Sta. |
| | Surv. Sta. |
| ALUMINUM APPROACH RAILING DETAILS FOR | |
| BRIDGES 10 (MM 6.5) & 21 (MM 17.5) (SHEET 1 OF 2) | |
| Designed By C.W. MEUNIER | Drawn By VAOT |
| Checked By C.W. MEUNIER — Date 10/96 | Bridge Design Supervisor G.S. ROGERS — Date 10/96 |
| PROJECT HARTFORD-SHARON-ROYALTON | PROJECT NO. IM IR 089-1(8) |
| I.G.C. \\atfs\...cadd\Filingcabinet\87a008\Structures\sa008dt1.dgn sa008rd8J | |
| Bridge Sheet No. BR 134 | Sheet 91 of 260 |

20-NOV-2000
PLOTTED