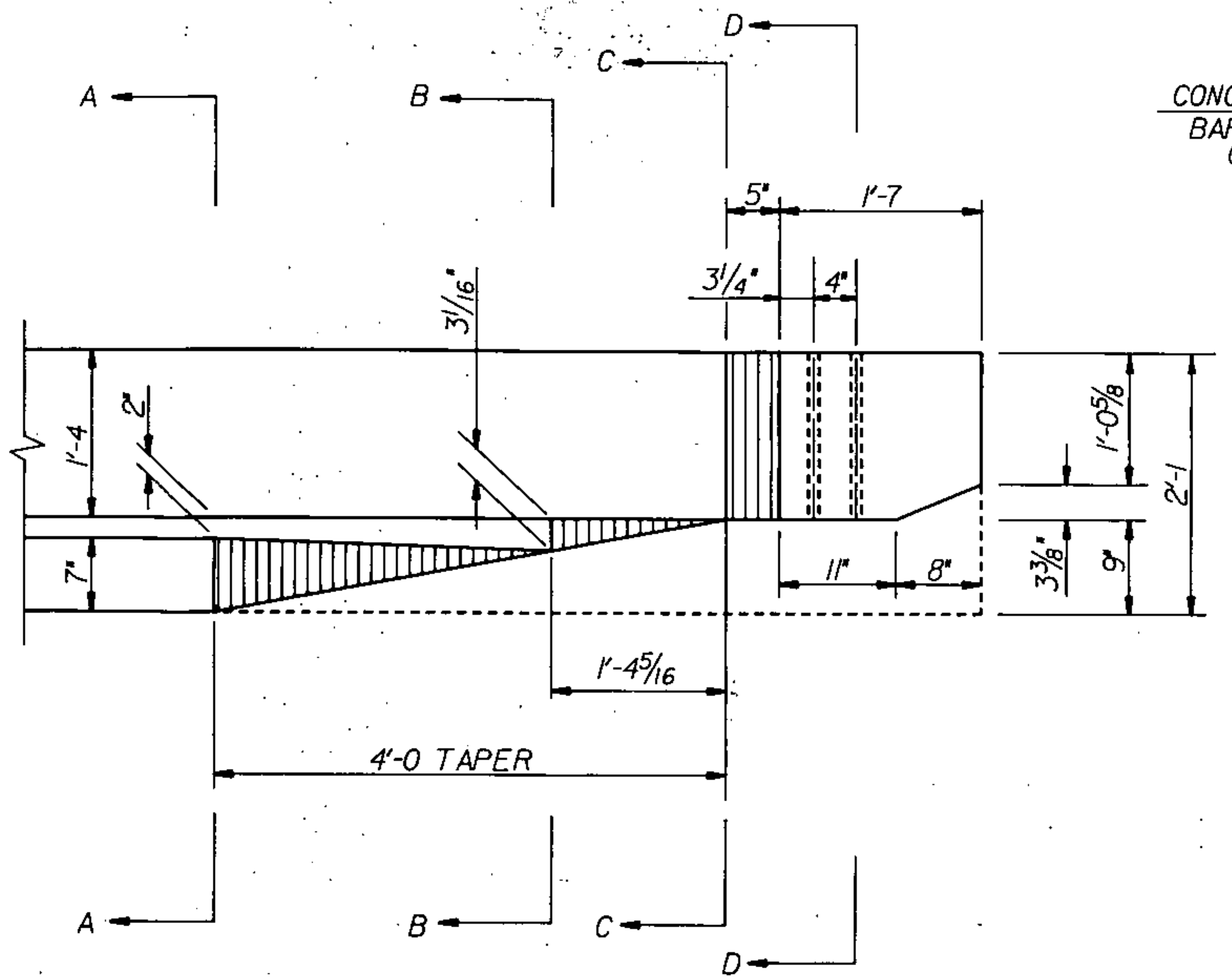
A
B
C
D
5"
1'-7
3¼"
4"
3¹⁄₁₆"
2"
1'-4
7"
1'-0⅝
2'-1
3⅜"
9"
11"
8"
1'-4⁵⁄₁₆
4'-0 TAPER
A
B
C
D

CURB END PLAN

SCALE 1" = 1'-0

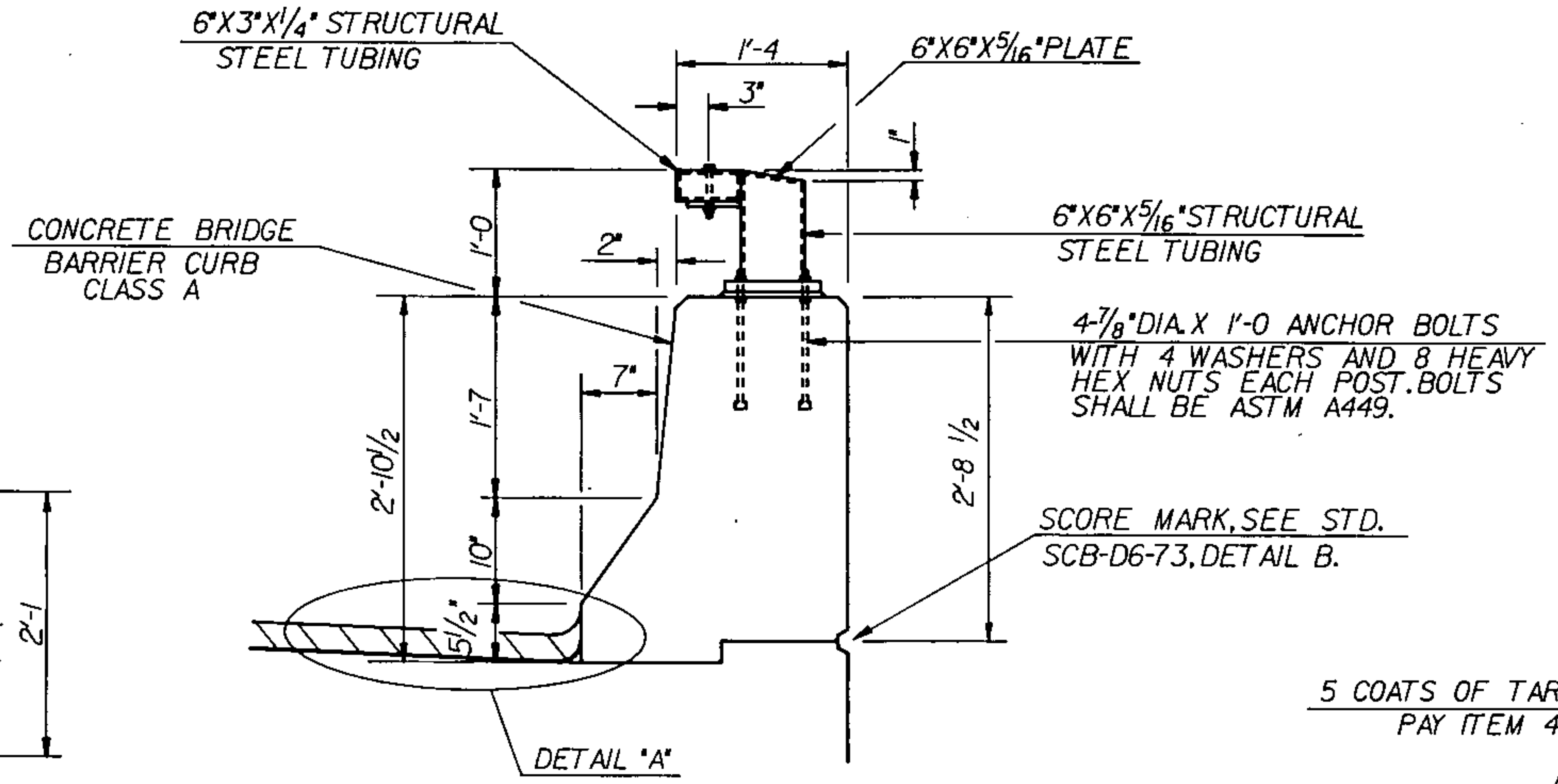
6"X3"X¼" STRUCTURAL STEEL TUBING
1'-4
3"
6"X6"X⁵⁄₁₆" PLATE
1"
CONCRETE BRIDGE BARRIER CURB CLASS A
1'-0
2"
6"X6"X⁵⁄₁₆" STRUCTURAL STEEL TUBING
4-⅞" DIA. X 1'-0 ANCHOR BOLTS WITH 4 WASHERS AND 8 HEAVY HEX NUTS EACH POST. BOLTS SHALL BE ASTM A449.
7"
1'-7
2'-10½
2'-8 ½
10"
5½"
SCORE MARK, SEE STD. SCB-D6-73, DETAIL B.
DETAIL "A"

BRIDGE BARRIER CURB & RAIL DETAIL

SCALE 1"=1'-0

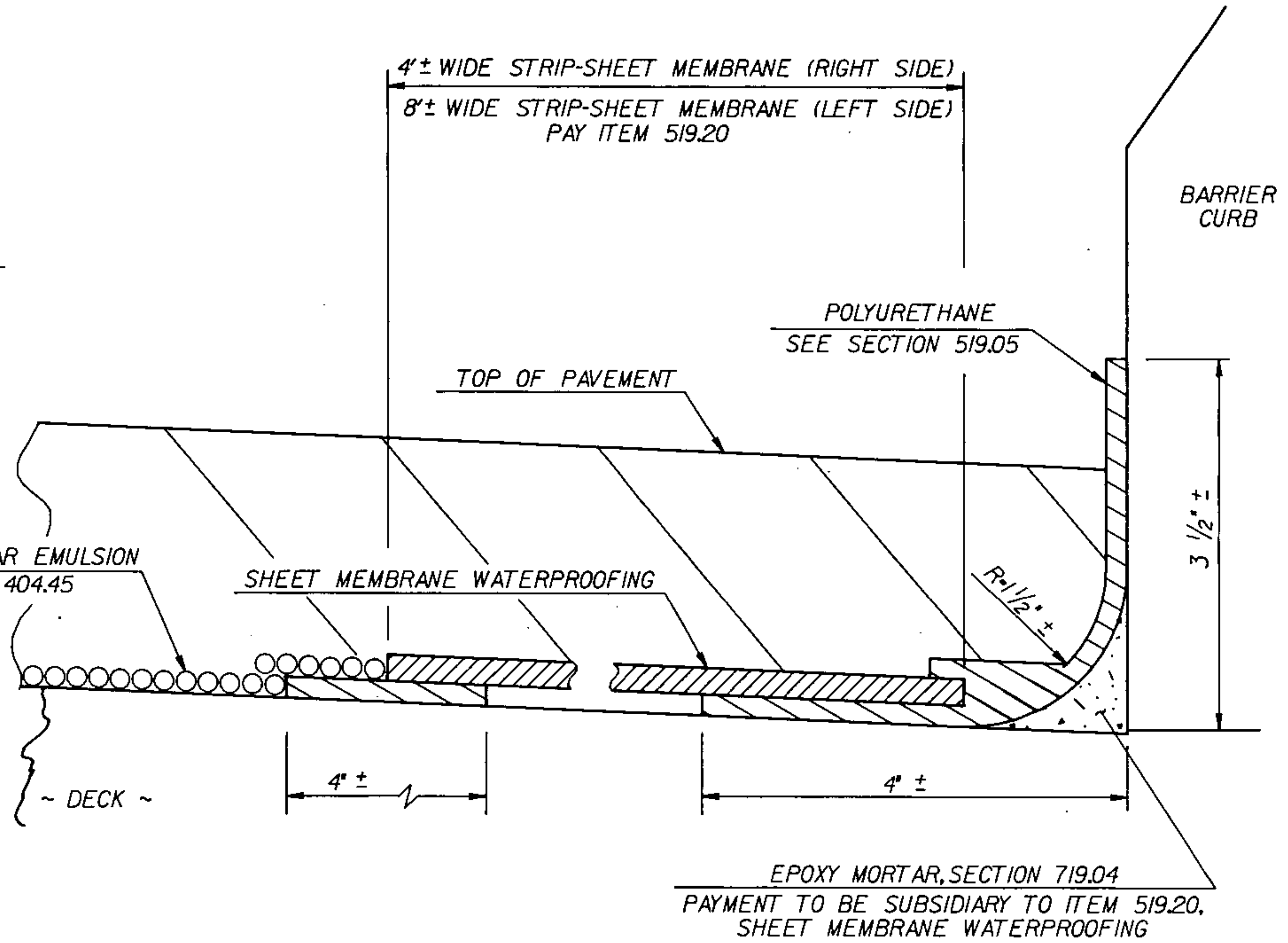
4'± WIDE STRIP-SHEET MEMBRANE (RIGHT SIDE)
8'± WIDE STRIP-SHEET MEMBRANE (LEFT SIDE) PAY ITEM 519.20
BARRIER CURB
POLYURETHANE SEE SECTION 519.05
TOP OF PAVEMENT
3 ½" ±
5 COATS OF TAR EMULSION PAY ITEM 404.45
SHEET MEMBRANE WATERPROOFING
R=1½" ±
~ DECK ~
4" ±
4" ±
EPOXY MORTAR, SECTION 719.04 PAYMENT TO BE SUBSIDIARY TO ITEM 519.20, SHEET MEMBRANE WATERPROOFING

DETAIL "A"

SCALE 1" = 1"

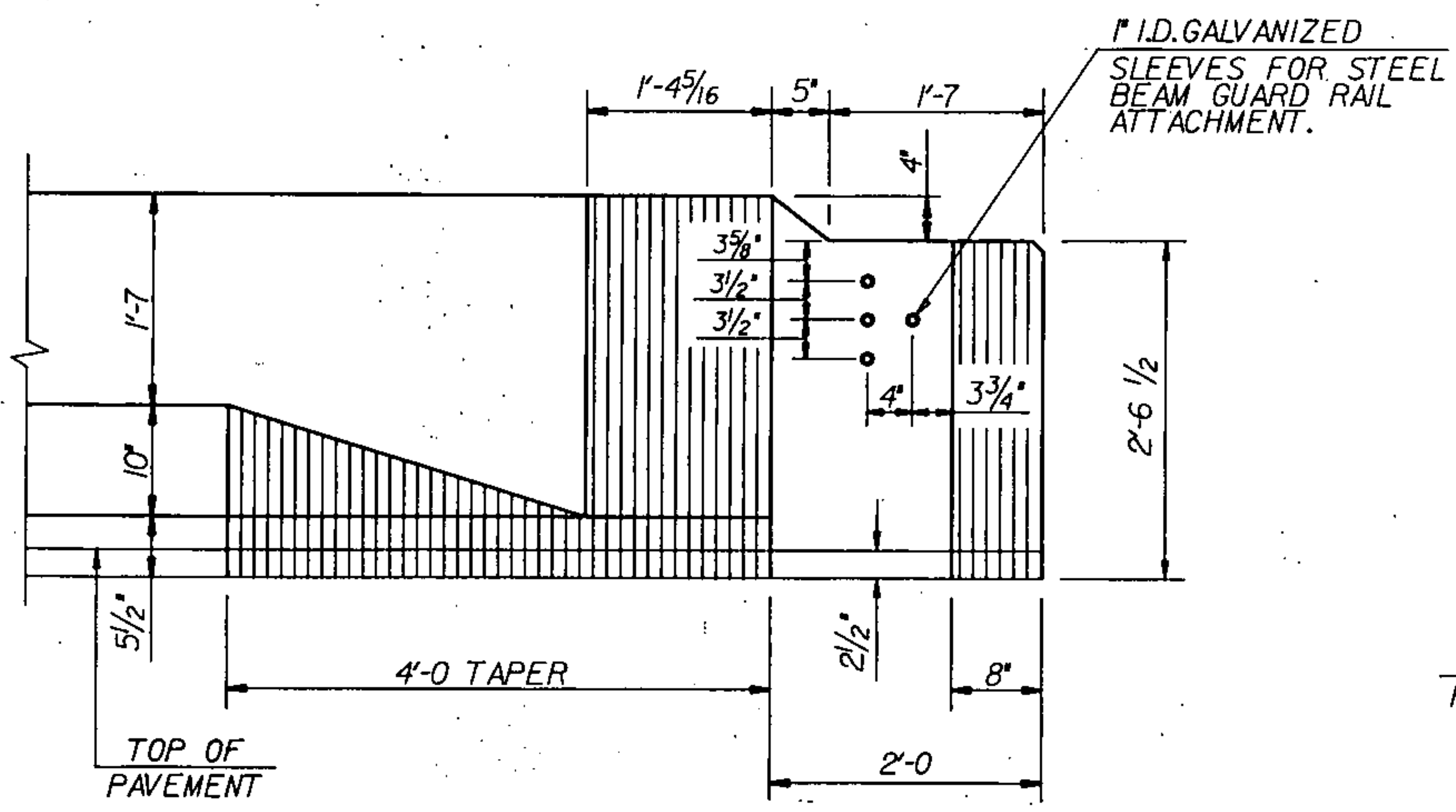
1" I.D. GALVANIZED SLEEVES FOR STEEL BEAM GUARD RAIL ATTACHMENT.
1'-4⁵⁄₁₆
5"
1'-7
4"
3⅝"
3½"
3½"
1'-7
4"
3¾"
2'-6 ½
10"
5½"
2½"
4'-0 TAPER
8"
2'-0
TOP OF PAVEMENT

CURB END ELEVATION

SCALE 1" = 1'-0

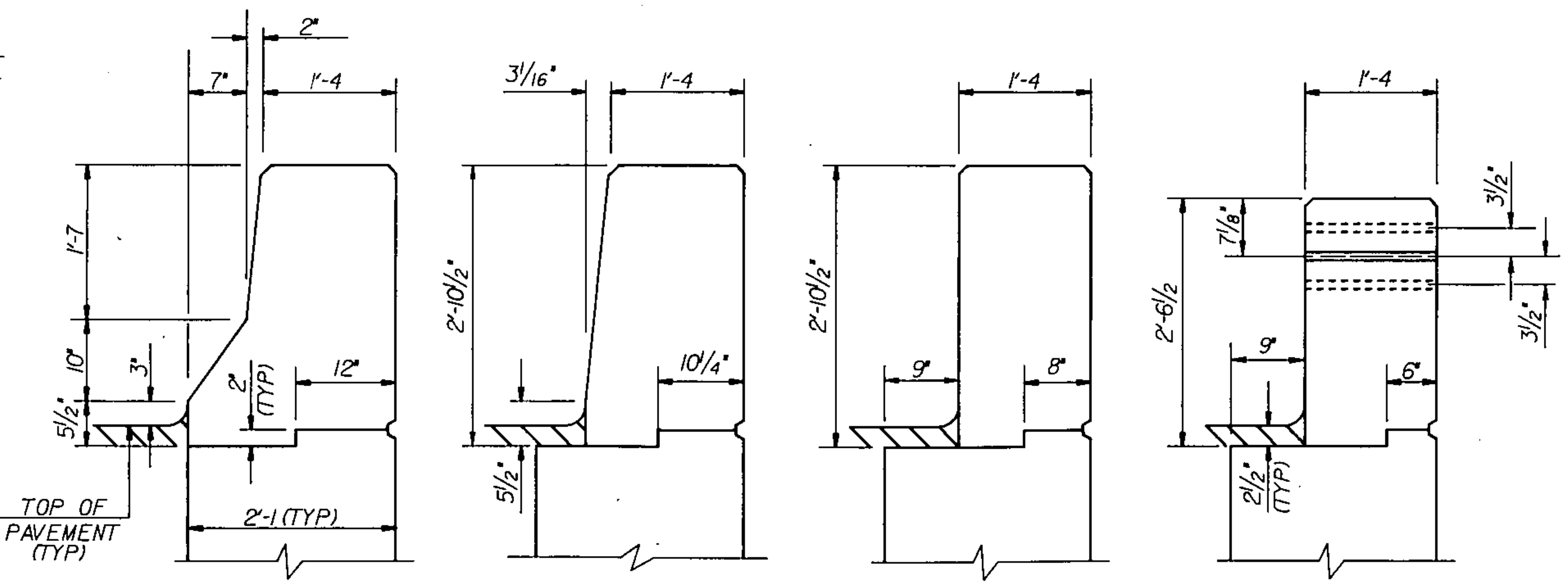
2"
7"
1'-4
1'-7
10"
3"
5½"
2" (TYP)
12"
2'-1 (TYP)
TOP OF PAVEMENT (TYP)
3¹⁄₁₆"
1'-4
2'-10½"
10¼"
5½"
1'-4
2'-10½"
9"
8"
1'-4
3½"
7⅛"
3½"
2'-6½
9"
6"
2½" (TYP)

SECTION A-A SECTION B-B SECTION C-C SECTION D-D

CURB END SECTIONS

SCALE 1" = 1'-0

STATE OF VERMONT
AGENCY OF TRANSPORTATION

Town Of ST. JOHNSBURY	Bridge No. 1
	Log Sta.
Highway No. I 91 NORTHERN CONN.	Surv. Sta. 60+00
I 91 NORTHERN CONNECTOR OVER THE PASSUMPIC RIVER	
CONCRETE BRIDGE BARRIER CURB END DETAILS	
Designed By G. SPILAK	Drawn By D. C. WILLEY
Checked By M. GARCIA Date 9-84	Bridge Design Supervisor R. S. HAUPT Date 9-84
PROJECT ST. JOHNSBURY	PROJECT NO. DP-FF041-1(10)
L.G.C. Info. QSAI:[30,25]76D07WWI.DGN	
Bridge Sheet No. BR126	Sheet 84 of 229

BRUNING 62165