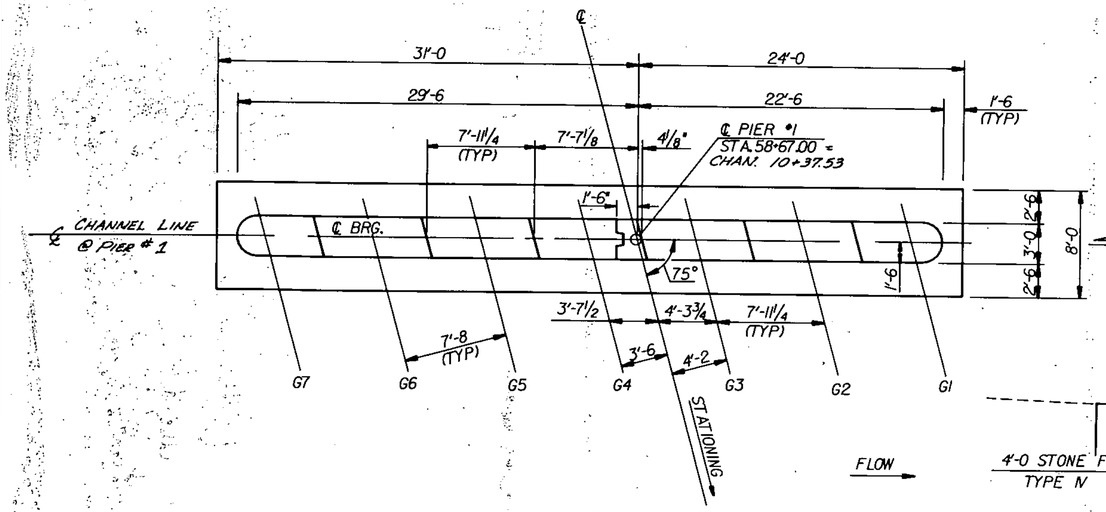

PLAN
SCALE 3/16" = 1'-0

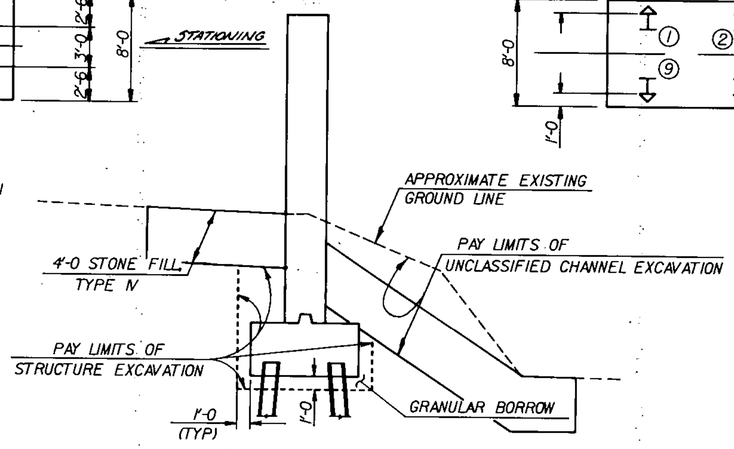

EARTHWORKS LIMITS
SCALE 3/16" = 1'-0

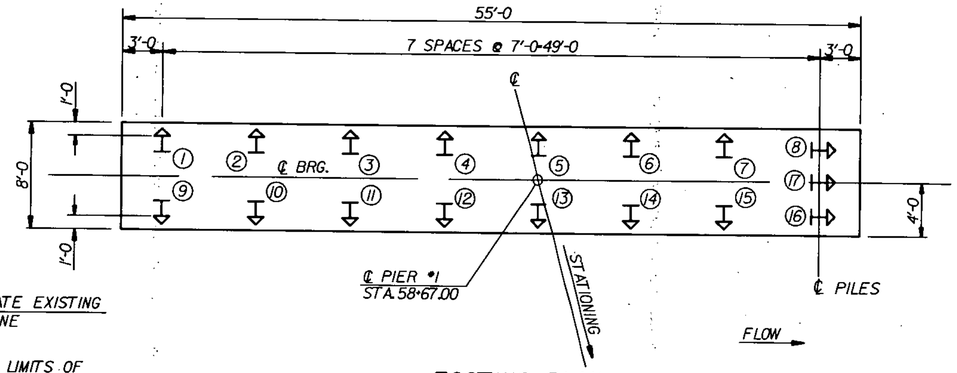

FOOTING PLAN
SCALE 3/16" = 1'-0

NOTES

1. ⊥ - INDICATES LOCATION AND DIRECTION OF 1 ON 6 BATTERED PILE.
2. APPROXIMATE LENGTH OF THE PILES IS 35'.
3. ALL PILES SHALL BE DRIVEN TO LEDGE OR REFUSAL. PILE DESIGN LOAD IS 96 TONS.
4. THE UNIT PRICE BID FOR STRUCTURE EXCAVATION SHALL INCLUDE ANY NECESSARY SHORING, SHEET PILING, OR A COFFERDAM AS REQUIRED FOR THIS PIER.

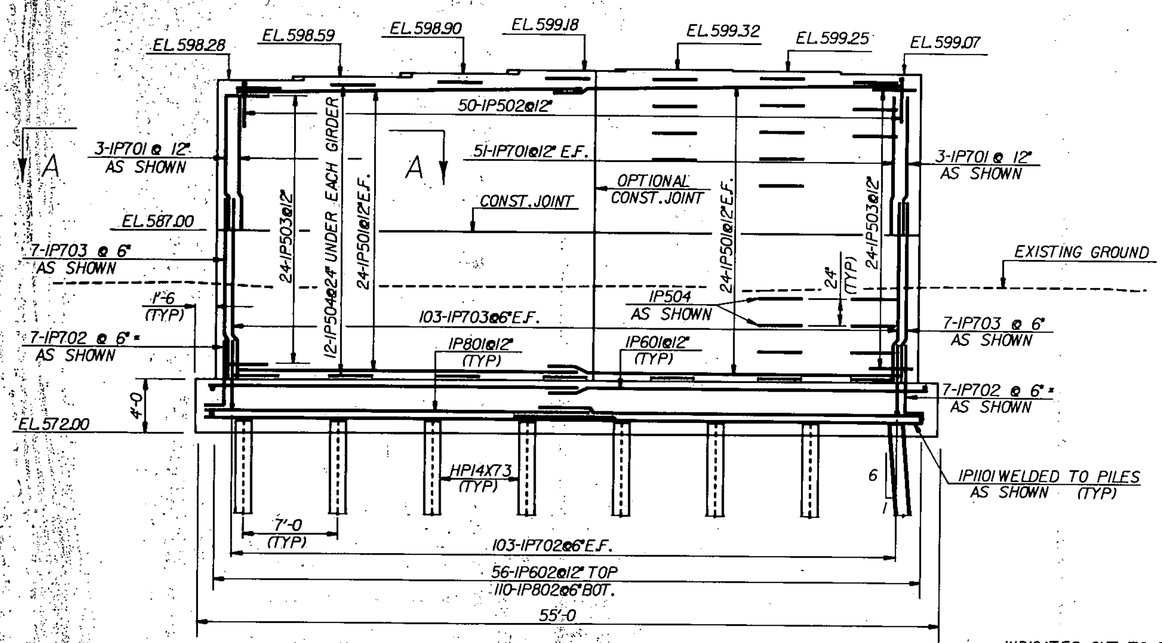

ELEVATION
SCALE 3/16" = 1'-0

* - INDICATES CUT TO FIT IN FIELD.

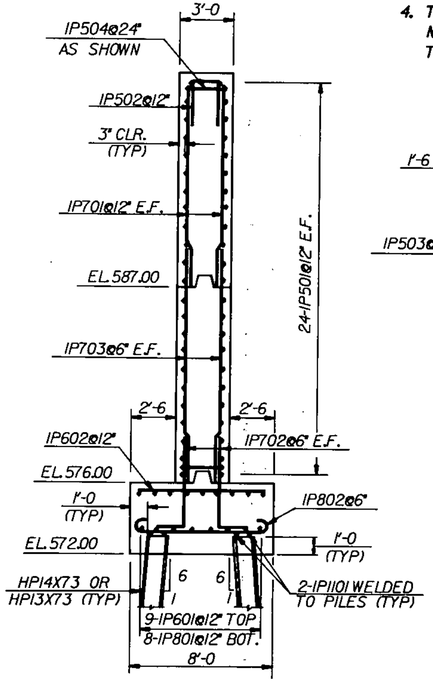

TYPICAL SECTION
SCALE 1/4" = 1'-0

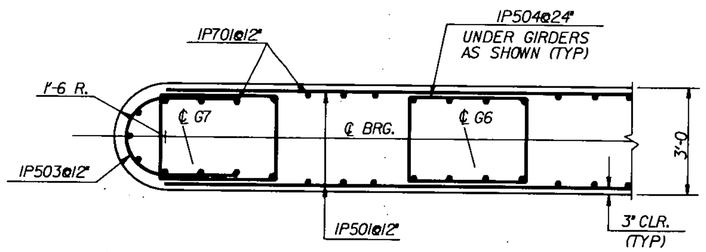

SECTION A - A
SCALE 1/2" = 1'-0

STATE OF VERMONT
AGENCY OF TRANSPORTATION

Town Of ST. JOHNSBURY	Bridge No. 1
Highway No. 191 NORTHERN CONN	Log Sta. / Surv. Sta. 58+67
PIER NO. 1 DETAILS	
191 NORTHERN CONNECTOR OVER THE PASSUMPSIC RIVER	
Designed By G. SPILAK	Drawn By D. C. WILLEY
Checked By M. GARCIA, Date 8-84	Bridge Design Supervisor R. S. HAUPT, Date 8-84
PROJECT ST. JOHNSBURY	PROJECT NO. DP-FF041-1(10)
L.G.C. Info. QSAI: 30.25376D07IPI.DGN	
Bridge Sheet No. BR121	Sheet 79 of 229

BR-6