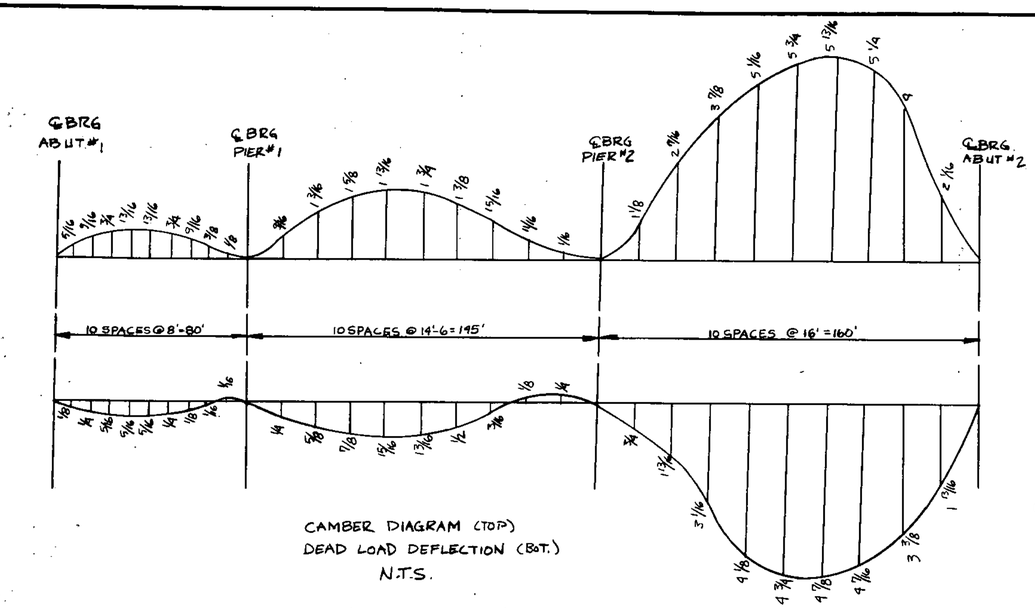

CAMBER DIAGRAM (TOP)
DEAD LOAD DEFLECTION (BOT.)
N.T.S.

NOTE: BEARING STIFFENERS ARE TO BE PLACED SKEWED, ALONG ℄ OF BEARING. SEE DETAIL B ON SHEET BR108.

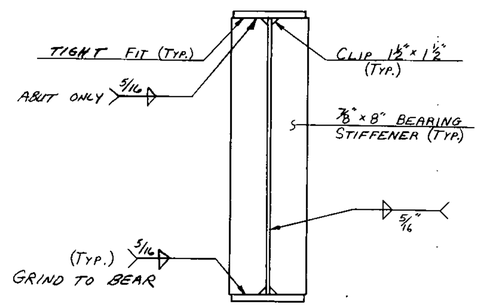

ABUT. #1, ABUT. #2 & PIER #1

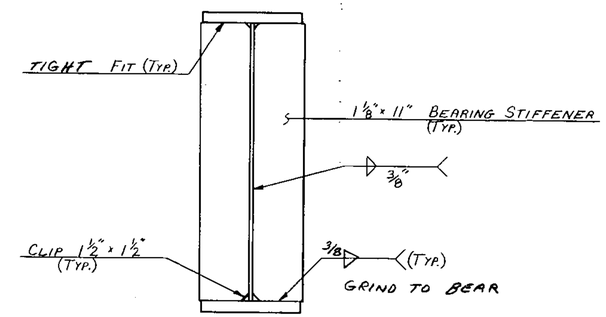

PIER #2

BEARING STIFFENER DETAILS
SCALE ¾" = 1'-0

TWO NO. 6 BARS HAVE BEEN PROVIDED OVER EACH BEAM TO BE USED AS CHAIR BARS FOR SUPPORTING TRANSVERSE REINFORCEMENT. CHAIR BARS ARE NOT SLAB REINFORCEMENT AND THEREFORE MAY BE WELDED TO THE SHEAR STUDS OR EXTENSION OF THE STUDS. WELDING OF DECK REINFORCEMENT IS NOT PERMITTED.

NOTES

1. WATER REPELLENT SHALL BE APPLIED TO ALL EXPOSED CONCRETE SURFACES OF THE CONCRETE BRIDGE BARRIER CURB AND DECK FROM THE FASCIAS TO THE FASCIA GIRDERS.
2. OMIT 1"Φ PLASTIC DRAIN TUBES SHOWN ON STANDARD SCB-D6-73, DETAIL F.

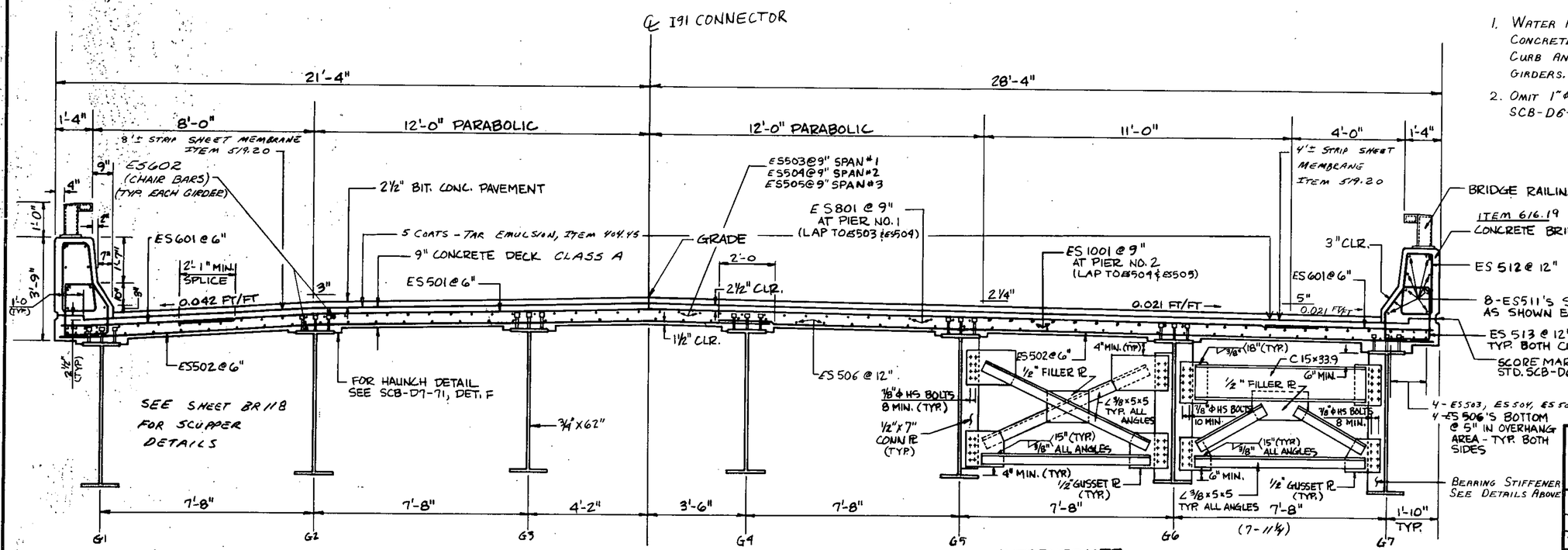

TYPICAL BRIDGE SECTION
SCALE: ½" = 1'-0"

INTERMEDIATE CROSSFRAME DETAIL

PIER & ABUTMENT CROSSFRAME DETAIL (ALONG ℄ BRG.)

STATE OF VERMONT
AGENCY OF TRANSPORTATION

TOWN OF ST. JOHNSBURY	Bridge No. 1 / Log Sta.
HIGHWAY NO. I-91 NORTH CONNECTOR	Surv. Sta. 60+0
I-91 NORTH CONNECTOR OVER PASSUMPSIC RIVER	
TYPICAL BRIDGE SECTION	
Designed by G.V. SPILAK	Drawn by G. KLINEFELTER
Checked by M. GARCIA date 6-84	Bridge Design Supervisor RS. HAUPT date 7-84
PROJECT ST. JOHNSBURY	PROJECT NO. DP-FF-041-1(10)
Bridge Sheet No. BR 107	Sheet 65 of 229

BR-6
BRUNING 44-131 40151