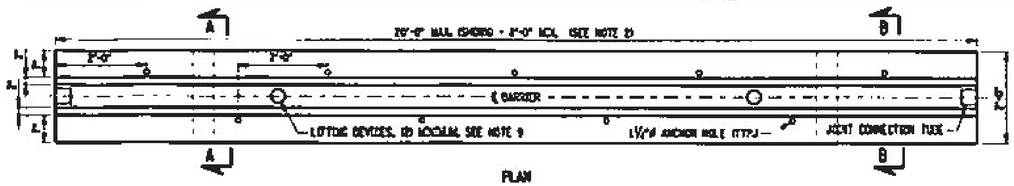

PLAN

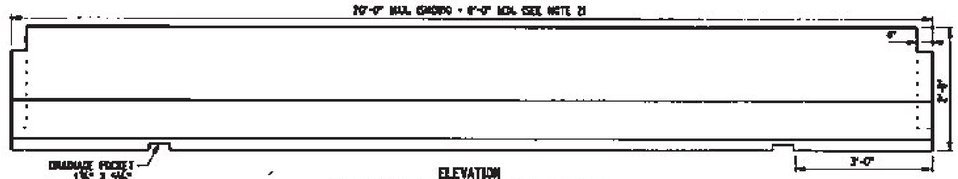

ELEVATION
TEMPORARY CONCRETE BARRIER FULL SECTION

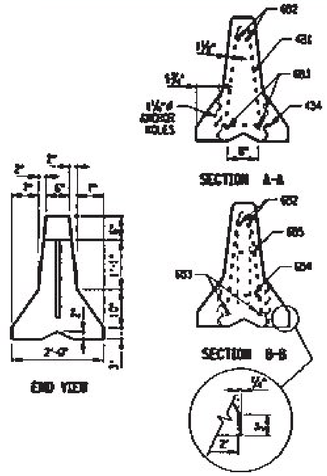

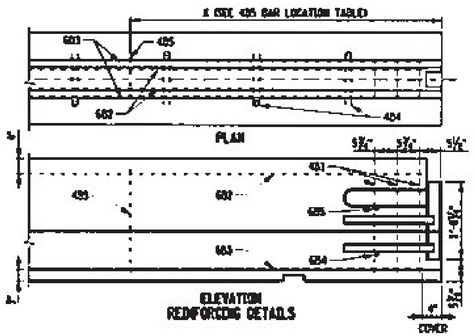

FULL SECTION BAR LIST								
MARK	SIZE	NUMBER PER SECTION	LENGTH	TYPE	A	B	C	LOCATION
491	4	6	4'-11"	I	5"	28"	1"	STIRRUPS
494	4	SEE TABLE	3'-1"	II	4"	18½"		ANCHOR RECESS HOOPS
495	4	1 PER RECESS	4'-11"	I	5"	28"	1"	STIRRUPS
602	6	2	SEE NOTE 7	STR.				LONGITUDINAL (TOP)
603	6	2	SEE NOTE 7	STR.				LONGITUDINAL (BOTTOM)
604	6	2	1'-2"	STR.				TRANSVERSE (BOTTOM)
605	6	2	6"	STR.				TRANSVERSE (TOP)

495 BAR LOCATION TABLE		
NOMINAL LENGTH OF BARRIER UNIT	X	NO. EACH SECTION
20'	9'-11"	2
18'	8'-5"	2
16'	5'-11"	2
14'	3'	1
12'	8'	1
10'	5'	1
8'	N/A	0

"X" DISTANCE FROM END OF BARRIER TO 495 BAR

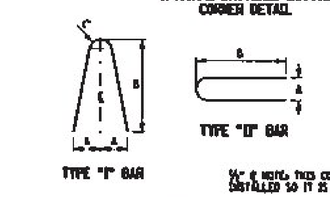

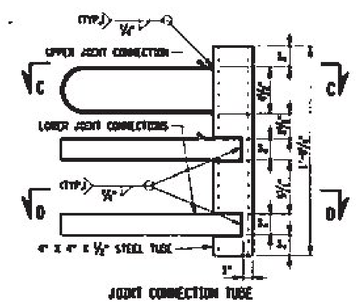

JOINT CONNECTION TUBE

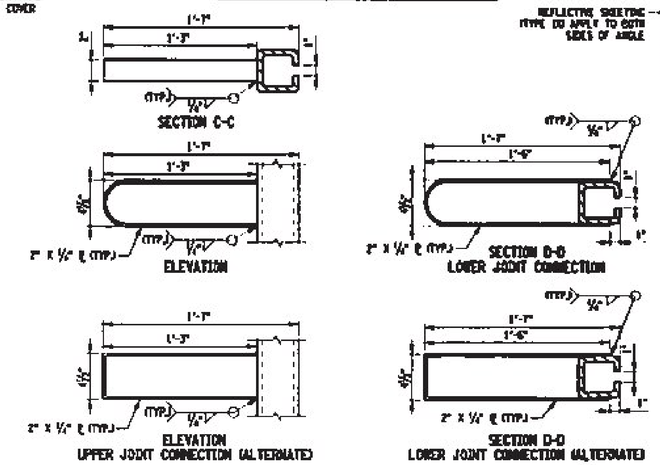

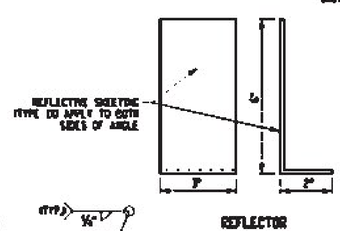

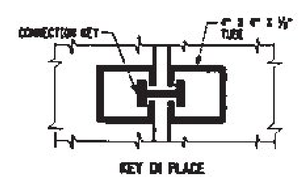

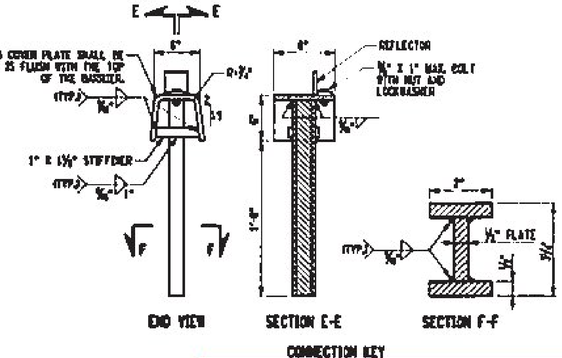

NOTES:

1. TEMPORARY CONCRETE BARRIER SHALL BE PRECAST IN ACCORDANCE WITH THE REQUIREMENTS OF ST704-005 PRECAST CONCRETE BARRIER.
2. TEMPORARY CONCRETE BARRIER SHALL BE PRECAST UNITS OF ONE OF THE FOLLOWING NOMINAL LENGTHS 8', 10', 12', 14', 16', 18', 20'.
3. STEEL PLATE REINFORCEMENT SHALL BE ASTM A36M, ASTM GRADE 345 STEEL. TUBE REINFORCEMENT SHALL BE ASTM A500, GRADE B OR C. AND REINFORCING BARS SHALL BE A615, GRADE 420. EPOXY BARS ARE NOT REQUIRED.
4. ALL WELDING SHALL BE PERFORMED BY A WELDER QUALIFIED IN ACCORDANCE WITH SECTION 8 OF THE NYS STEEL CONSTRUCTION MANUAL.
5. SURFACES TO BE WELDED SHALL BE FREE OF SLAG, RUST, MOISTURE, GREASE OR ANY OTHER MATERIAL THAT WILL PREVENT PROPER WELDING OR PRODUCE OBJECTIONABLE FUMES.
6. WELDING SHALL BE SHIELDED METAL ARC WELDING USING PROPERLY DRIED 5/32"ø E7018 ELECTRODES CONFORMING TO THE REQUIREMENTS OF SECTION 7 OF THE NYS STEEL CONSTRUCTION MANUAL.
7. THE NUMBER AND PLACEMENT OF THE 494 AND 495 BARS WILL VARY WITH THE LENGTH OF THE BARRIER SEGMENT.
8. CONCRETE CLEAR COVER FOR REINFORCING BARS SHALL BE 1½" MIN. UNLESS OTHERWISE SPECIFIED.
9. A MINIMUM OF (2) TWO RECESSED LIFTING DEVICES, EACH WITH THE CAPACITY TO LIFT A MASS OF 6 TONS MINIMUM, SHALL BE INSTALLED ON EACH SEGMENT. SEGMENT MASS IS APPROXIMATELY 450 LBS/FT.
10. ONE DRAINAGE POCKET SHALL BE INCLUDED IN THE CENTER OF 8'-0" AND 10'-0" SEGMENTS, TWO DRAINAGE POCKETS IN ALL OTHER SEGMENTS.
11. CONNECTION KEY COVER PLATE SHALL BE INSTALLED FLUSH WITH THE BARRIER TOP.
12. 1"ø ASTM A36M ANCHOR PINS SHALL BE PLACED IN FOUR ANCHOR HOLES OF EACH SEGMENT TO BE PINNED.
13. BASED ON SEGMENT LENGTH AND MAXIMUM JOINT ROTATION, TEMPORARY CONCRETE BARRIER CAN ONLY BE INSTALLED TO THE FOLLOWING MINIMUM RADII: 8' - 92', 10' - 115', 12' - 138', 14' - 161', 16' - 184', 18' - 207', 20' - 230'.

STATE OF NEW YORK
DEPARTMENT OF TRANSPORTATION

U.S. CUSTOMARY STANDARD SHEET

TEMPORARY CONCRETE BARRIER
(SHEET 1 OF 3)

APPROVED SEPTEMBER 30, 2009
/S/ J. F. TOWN, P.E.
DEPUTY CHIEF ENGINEER
(CONSTRUCTION)

ISSUED UNDER ED 09-03

619-01

EFFECTIVE DATE: 01/01/10