TYPICAL PAVEMENT MARKINGS

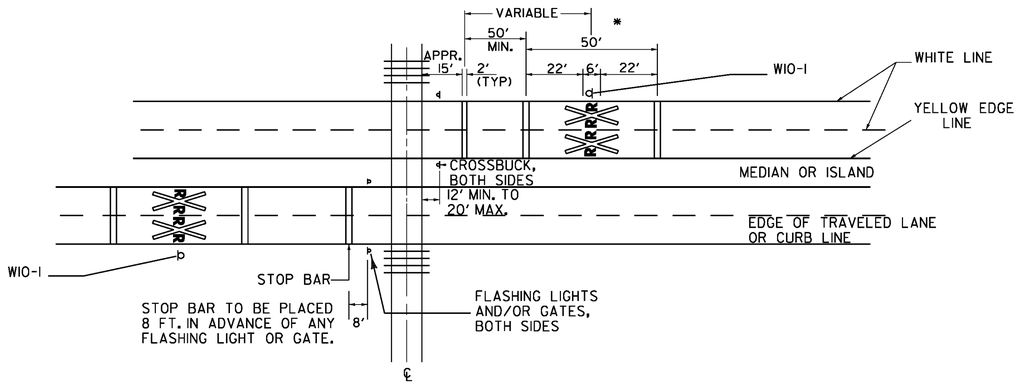

4 LANE DIVIDED HIGHWAY

NOT TO SCALE

PROJECT NAME: STATEWIDE	
PROJECT NUMBER: IMG MARK(115)	
FILE NAME: t14t185.dgn	PLOT DATE: 1/29/2015
PROJECT LEADER: P. COBURN	DRAWN BY: K. SWEET
DESIGNED BY: K. SWEET	CHECKED BY: I. DEGUTIS
TYPICAL PAVEMENT MARKING SHEET 4	SHEET 6 OF 33