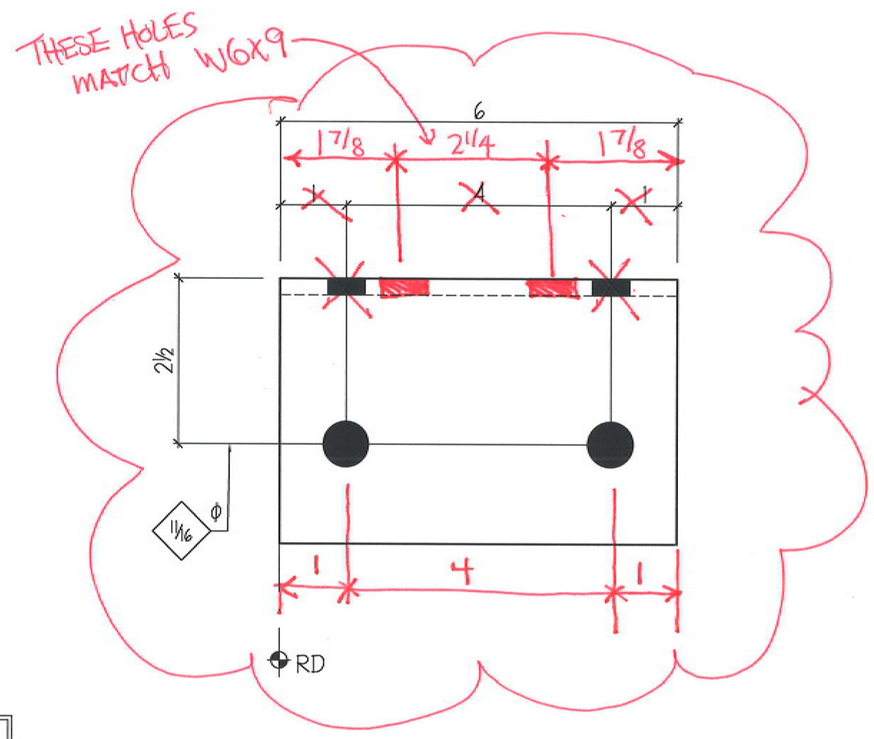

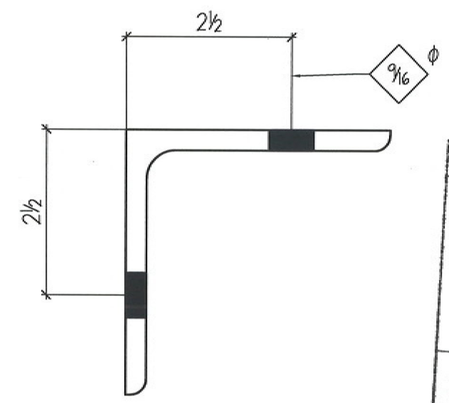

Vermont Agency of Transportation
RECEIVED
CK'D BY Mark SargentS OK'D BY Mark Sargent
April 17, 2017
RESUBMIT No Approved AsNoted
BY Mark Sargent DATE 06/14/2017

SUBMITTAL REVIEW
Review is only for general conformity to the contract drawings and specifications and shall not relieve the contractor of his entire responsibility under the contract, including among other things, dimensions to be confirmed and correlated at the job site, and information that pertains to the fabrication processes or to techniques of construction.
- [ ] NO EXCEPTIONS TAKEN
- [x] MAKE CORRECTIONS NOTED RESUBMITTAL NOT REQUIRED
- [ ] AMEND AND RESUBMIT
- [ ] REJECTED - SEE REMARKS

PARSONS BRINCKERHOFF, INC.
BY: Stephen L. Barrington
DATE: 5/17/17

HOT DIP GALV. PER A.S.T.M. A123
SHOP PROVIDE 9/16Ø VENT HLS. AS REQ'D.

10 ~ ANGLES ~ 2A1
REF: E1

BRIDGE 42 NORTH & SOUTH

NO.	DATE	REVISION
2	4/19/17	Per App'l
1	3/3/17	Per Check'g

SURFACE PREP: SSPC-SP2 FINISH: GALV PRIMER: N/A DFT: 1.0

SHIP QTY	ASSEMBLY QTY	SECTION	FT	INCH	ASSEMBLY MARK	SHIP MARK	REMARKS	WEIGHT
10		L4x4x1/4	0	6		2A1		
20		STA 1/2Ø	0	4 1/4		2FB1	GALV STUD ANCHOR	

HOLES: 11/16Ø UNO
SHOP BOLTS: A325-TC
MATL: W's - A992-50; HSS - A500 Grd B; Pipe - A53 Grd B; Bars & P & L - A36
ELECTRODES: E70XX/E71-T
E DWG REF: E1
ENGR DWG REF: E1
SEQ / DIV:
GRID LOCATION:
TOS ELEVATION:
NOTES:

Chk Fab Saw: INITIAL DATE; Chk Saw Drill: INITIAL DATE; Chk Drill Chk Fitup Fitter: INITIAL DATE; Chk Fitter QCI: INITIAL DATE
Chk QCI Weld: INITIAL DATE; Chk Weld Prep: INITIAL DATE; Chk Prep Paint: INITIAL DATE; Chk Paint Load: INITIAL DATE

RELIANCE STEEL
94 SOUTH OAK CIRCLE, COLCHESTER, VT 05446
TEL 802-655-4810 FAX 802-655-9352
www.reliancesteelofvt.com

CUSTOMER Monoko
PROJECT Bridge Downspouts & Components
DETAIL Trough Angle Supports

DRAWN/CHECKED	DATE	JOB NO.	DWG NO.	REV
RCL	FEB 2017	7324	02	2