# STATE OF VERMONT
# AGENCY OF TRANSPORTATION

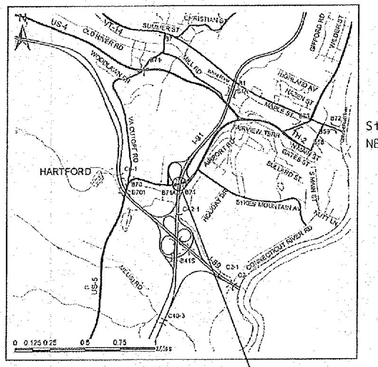
US-4
QUECHEE
WOODSTOCK
VT-12
HARTLAND
HARTLAND JCT
WEST HARTFORD
HARTFORD
WHITE RIVER JCT
I-91
I-89
I-89
I-91
I-91
I-91

STATE OF VERMONT
AGENCY OF TRANSPORTATION

# PRELIMINARY INFORMATION SHEET (BRIDGE)

Version
**LRFD**

## INDEX OF SHEETS

### PLAN SHEETS


| | | |
|---|---|---|
| 1 | TITLE SHEET |
| 2 | BRIDGE 43S PRELIMINARY INFORMATION SHEET |
| 3 | BRIDGE 43N PRELIMINARY INFORMATION SHEET |
| 4 - 6 | GENERAL NOTES 1-3 |
| 7 - 10 | QUANTITY SHEETS 1-4 |
| 11 - 12 | BRIDGE QUANTITY SHEETS 1-2 |
| 13 - 15 | TYPICAL SECTIONS 1-3 |
| 16 | LEGEND SHEET |
| 17 | TIE SHEET |
| 18 - 20 | EXISTING CONDITIONS 1-3 |
| 21 - 23 | LAYOUT SHEETS 1-3 |
| 24 | SB PROFILE |
| 25 | NB PROFILE |
| 26 - 28 | US 5 LAYOUT SHEETS 1-3 |
| 29 | US 5 PROFILE |
| 30 | RAMP A LAYOUT SHEET |
| 31 - 34 | 1-91 SB TRAFFIC CONTROL PLANS 1-4 |
| 35 - 39 | 1-91 NB TRAFFIC CONTROL PLANS 1-5 |
| 40 - 41 | RAMP C LAYOUT SHEETS 1-2 |
| 42 - 44 | US 5 TRAFFIC CONTROL PLANS 1-3 |
| 45 | SMART WORK ZONE LAYOUT |
| 46 | SMART WORK ZONE DETAILS |
| 47 - 49 | TEMPORARY TRAFFIC SIGNAL LAYOUT SHEETS 1-3 |
| 50 | REGIONAL DETOUR LEGEND |
| 51 - 53 | DETOUR SCENARIO SHEETS 1-3 |
| 54 | DRAINAGE LAYOUT SHEET |
| 55 | STAGING LAYOUT SHEET |
| 56 | UTILITY LAYOUT SHEET |
| 57 | SIGN AND PAVEMENT MARKINGS SHEET |
| 58 | TRAFFIC SIGN SUMMARY SHEET |
| 59 - 61 | US 5 SIGN & PAVEMENT MARKINGS SHEETS 1-3 |
| 62 - 63 | US 5 TRAFFIC SIGN SUMMARY SHEETS 1-2 |
| 64 - 65 | RAIL LAYOUT SHEETS 1-2 |
| 66 - 68 | RAIL DETAILS 1-3 |
| 69 | EXISTING BORING LAYOUT SHEET |
| 70 - 71 | EXISTING BORING LOGS 1-2 |
| 72 | PROPOSED BORING LAYOUT SHEET |
| 73 - 84 | PROPOSED BORING LOGS 1-12 |
| 85 | SUPERSTRUCTURE TYPICAL 43S |
| 86 | SUPERSTRUCTURE TYPICAL 43N |
| 87 | FRAMING PLAN BRIDGE 43S |
| 88 | FRAMING PLAN BRIDGE 43N |
| 89 | CAMBER & DEFLECTION |
| 90 | DECK REINFORCING PLAN 43S |
| 91 | DECK REINFORCING PLAN 43N |
| 92 | SUPERSTRUCTURE DETAILS |
| 93 | SUSPENDED BACKWALL DETAILS 43S |
| 94 | SUSPENDED BACKWALL DETAILS 43N |
| 95 | BEARING NOTES |
| 96 | BEARING DETAILS |
| 97 | APPROACH SLAB PLAN 43S |
| 98 | APPROACH SLAB PLAN 43N |
| 99 | APPROACH SLAB DETAILS |
| 100 | ABUTMENT TYPICALS |
| 101 | ABUTMENT 1 |
| 102 | ABUTMENT 1 FOOTING |
| 103 - 104 | WING WALLS 1-2 |
| 105 | ABUTMENT 2 |
| 106 | ABUTMENT 2 FOOTING |
| 107 - 108 | WING WALLS 3-4 |
| 109 | ABUTMENT 3 |
| 110 | ABUTMENT 3 FOOTING |
| 111 - 112 | WING WALLS 5-6 |
| 113 | ABUTMENT 4 |
| 114 | ABUTMENT 4 FOOTING |
| 115 - 116 | WING WALLS 7-8 |
| 117 - 124 | RETAINING WALLS 1-8 |
| 125 | RSS SUPERSTRUCTURE 43S |
| 126 | RSS SUPERSTRUCTURE 43N |
| 127 - 130 | RSS ABUTMENTS 1-4 |
| 131 | RSS RETAINING WALLS |
| 132 | EPSC NARRATIVE |
| 133 - 134 | EPSC PLAN DURING CONSTRUCTION SHEETS 1-2 |
| 135 - 136 | EPSC PLAN FINAL CONDITIONS SHEETS 1-2 |
| 137 | EPSC DETAILS |
| 138 | MATERIAL TRANSITION I-91 |
| 139 | BANKING DIAGRAM 1-91 |
| 140 | BANKING DIAGRAM US 5 |
| 141 - 145 | I-91 SB CROSS SECTIONS |
| 146 - 150 | I-91 NB CROSS SECTIONS |
| 151 - 166 | US 5 CROSS SECTIONS |


### STANDARDS LIST

| | | |
|---|---|---|
| C-10 | CURBING | 02-11-2008 |
| D-1 | PRECAST REINFORCED CONCRETE DROP INLET DETAILS | 06-01-1994 |
| E-120 | STANDARD SIGN PLACEMENT - EXPRESSWAY & FREEWAY | 08-08-1995 |
| E-123 | GUIDE SIGN PLACEMENT - MISCELLANEOUS DETAILS | 03-16-2004 |
| E-171A | TRAFFIC CONTROL SIGNALS GENERAL NOTES & DETAILS | 08-09-1995 |
| E-171B | TRAFFIC CONTROL SIGNALS MISC. DETAILS | 08-09-1995 |
| E-172 | VEHICLE DETECTOR LOOP DETAILS | 08-09-1995 |
| E-173 | PULL BOXES AND JUNCTION BOXES | 08-09-1995 |
| E-175 | POWER DROP STANCHIONS | 06-08-2009 |
| E-180A | STREET LIGHTING DETAILS | 08-09-1995 |
| E-180B | STREET LIGHTING DETAILS | 08-09-1995 |
| E-191 | PAVEMENT MARKING DETAILS | 02-01-1999 |
| E-192 | PAVEMENT MARKING DETAILS | 10-12-2000 |
| F-2 | CHAIN LINK FENCE, TYPE I DETAILS | 06-01-1994 |
| G-1 | STEEL BEAM GUARDRAIL DETAILS (POST, DELINEATOR, TYPICALS) | 02-10-2014 |
| G-1D | STEEL BEAM GUARDRAIL DETAILS (END TERMINAL, ANCHOR, MEDIAN) | 02-10-2014 |
| G-19 | GENERIC GRADING PLANS FOR GUARDRAIL END TERMINALS | 11-15-2002 |
| S-363 | THRIE BEAM TO STANDARD STEEL BEAM TRANSITION SECTION | 04-23-2012 |
| T-1 | TRAFFIC CONTROL GENERAL NOTES | 08-06-2012 |
| T-11 | CONSTRUCTION APPROACH SIGNING DIVIDED HIGHWAY ONE LANE CLOSED | 08-06-2012 |
| T-12 | TRAFFIC CONTROL DIVIDED HIGHWAY ONE LANE CLOSED | 08-06-2012 |
| T-13 | TRAFFIC CONTROL DIVIDED HIGHWAY ONE LANE CLOSED | 08-06-2012 |
| T-17 | TRAFFIC CONTROL MISCELLANEOUS DETAILS | 08-06-2012 |
| T-20 | TEMPORARY TERMINATION OF EXPRESSWAY & FREEWAY FACILITIES | 08-06-2012 |
| T-22 | TRAFFIC CONTROL FOR PAVEMENT MARKING ON DIVIDED HIGHWAY | 08-06-2012 |
| T-23 | TRAFFIC CONTROL FOR PAVEMENT MARKING ON DIVIDED HIGHWAY | 08-06-2012 |
| T-28 | CONSTRUCTION SIGN DETAILS | 08-06-2012 |
| T-31 | CONSTRUCTION SIGN DETAILS | 08-06-2012 |
| T-35 | CONSTRUCTION ZONE LONGITUDINAL DROP-OFFS | 08-06-2012 |
| T-36 | CONSTRUCTION ZONE LONGITUDINAL DROP-OFFS FOR PAVING | 08-06-2012 |
| T-40 | DELINEATORS AND MILEPOSTS | 01-02-2013 |
| T-42 | BRIDGE NUMBER PLAQUE | 04-09-2014 |
| T-43 | FREEWAY - EXPRESSWAY DELINEATOR PLACEMENT | 04-09-2014 |
| T-45 | SQUARE TUBE SIGN POST AND ANCHOR | 01-02-2013 |

### STRUCTURES DETAIL SHEETS

| | | |
|---|---|---|
| SD-501.00 | CONCRETE DETAILS AND NOTES | 5/7/2010 |
| SD-502.00 | CONCRETE DETAILS AND NOTES | 5/7/2010 |
| SD-516.10 | BRIDGE JOINT ASHPALTIC PLUG | 5/7/2010 |
| SD-601.00 | STRUCTURAL STEEL DETAILS AND NOTES | 5/7/2010 |
| SD-602.00 | STRUCTURAL STEEL PLATE GIRDER DETAILS AND NOTES | 5/7/2010 |

| REVISION | DATE | DESCRIPTION | BY |
|---|---|---|---|
| 1 | 12-17-2014 | UPDATED SHEET INDEX | JS |

### AS BUILT "REBAR" DETAIL

| LEVEL I | LEVEL II | LEVEL III |
|---|---|---|
| TYPE: | TYPE: | TYPE: |
| GRADE: | GRADE: | GRADE: |

### TRAFFIC DATA

| YEAR | ADT | DHV | % D | % T | ADTT |
|---|---|---|---|---|---|
| 2015 | 11500 | 1500 | 100 | 10.5 | 1200 |
| 2035 | 13900 | 1900 | 100 | 15.5 | 2200 |

20 year ESAL for flexible pavement from 2015 to 2035 : 7704000

40 year ESAL for flexible pavement from 2015 to 2055 : 18573000

Design Speed : 65 mph

## FINAL HYDRAULIC REPORT

### LRFR LOAD RATING FACTORS

| LOADING LEVELS | TRUCK | | | | | | |
|---|---|---|---|---|---|---|---|
| | H-20 | HL-93 | 3S2 | 6 AXLE | 3A. STR | 4A. STR | 5A. SEMI |
| TONNAGE | 20 | 36 | 36 | 66 | 30 | 34.5 | 38 |
| INVENTORY | 3.07 | 1.25 | | | | | |
| POSTING | | | | | | | |
| OPERATING | 4.00 | 1.63 | 2.66 | 1.60 | 2.75 | 2.42 | 2.40 |
| COMMENTS: | | | | | | | |

### DESIGN VALUES

| | | |
|---|---|---|
| 1. DESIGN LIVE LOAD | | HL-93 |
| 2. FUTURE PAVEMENT | $d_p$: | 3.0 INCH |
| 3. DESIGN SPAN | $L$: | 128.00 FT |
| 4. MIN. MID-SPAN POS. CAMBER @ RELEASE (PRESTRESSED UNITS) | $\Delta$: | --- |
| 5. PRESTRESSING STRAND (0.375 INCH DIAMETER - LOW RELAX) | $f_y$: | 270 KSI |
| 6. PRESTRESSED CONCRETE STRENGTH | $f'_c$: | 5.0 KSI |
| 7. PRESTRESSED CONCRETE RELEASE STRENGTH | $f'_{ci}$: | 4.0 KSI |
| 8. CONCRETE, HIGH PERFORMANCE CLASS AA | $f'_c$: | 4.0 KSI |
| 9. CONCRETE, HIGH PERFORMANCE CLASS A | $f'_c$: | 4.0 KSI |
| 10. CONCRETE, HIGH PERFORMANCE CLASS B | $f'_c$: | 3.5 KSI |
| 11. CONCRETE, CLASS C | $f'_c$: | 3.0 KSI |
| 12. REINFORCING STEEL | $f_y$: | 60 KSI |
| 13. STRUCTURAL STEEL AASHTO M270 (WEATHERING) | $f_y$: | 50 KSI |
| 14. NOMINAL BEARING RESISTANCE OF SOIL | $q_n$: | 30.4 KSF |
| 15. SOIL BEARING RESISTANCE FACTOR (REFER TO AASHTO LRFD) | $\phi$: | 0.45 |
| 16. NOMINAL BEARING RESISTANCE OF ROCK | $q_n$: | 120.0 KSF |
| 17. ROCK BEARING RESISTANCE FACTOR (REFER TO AASHTO LRFD) | $\phi$: | 0.45 |
| 18. PILE RESISTANCE FACTOR | $\phi$: | --- |
| 19. LATERAL PILE DEFLECTION | $\Delta$: | --- |
| 20. BASIC WIND SPEED | $V_{3s}$: | --- |
| 21. MINIMUM GROUND SNOW LOAD | $p_g$: | --- |
| 22. SEISMIC DATA PGA: 0 | $S_s$: | --- |
| | $S_1$: | --- |
| 23. | | --- |
| 24. | | --- |
| 25. | | --- |
| 26. | | --- |

PROJECT NAME: **HARTFORD**

PROJECT NUMBER: **IM 091-2 (79)**

FILE NAME: **s12a132pi.dgn**
PROJECT LEADER: **K. HIGGINS**
DESIGNED BY: **W. LAMMER**
**BRIDGE 43S PRELIMINARY INFORMATION SHEET**

PLOT DATE: 12/17/2014
DRAWN BY: **K. FRIEDLAND**
CHECKED BY: **J. SALVATORI**

STATE OF VERMONT
AGENCY OF TRANSPORTATION

# PRELIMINARY INFORMATION SHEET (BRIDGE)

Version
**LRFD**

## INDEX OF SHEETS

### PLAN SHEETS

### STANDARDS LIST

## FINAL HYDRAULIC REPORT

## TRAFFIC DATA

| YEAR | ADT | DHV | % D | % T | ADTT |
|---|---|---|---|---|---|
| 2015 | 7600 | 1200 | 100 | 10 | 1000 |
| 2035 | 9100 | 1500 | 100 | 14.8 | 1800 |

20 year ESAL for flexible pavement from 2015 to 2035 : 7165000

40 year ESAL for flexible pavement from 2015 to 2055 : 17331000

Design Speed : 65 mph

## AS BUILT "REBAR" DETAIL

| LEVEL I | LEVEL II | LEVEL III |
|---|---|---|
| TYPE: | TYPE: | TYPE: |
| GRADE: | GRADE: | GRADE: |

## LRFR LOAD RATING FACTORS

| LOADING LEVELS | TRUCK | | | | | | |
|---|---|---|---|---|---|---|---|
| | H-20 | HL-93 | 3S2 | 6 AXLE | 3A. STR. | 4A. STR. | 5A. SEMI |
| TONNAGE | **20** | **36** | **36** | **66** | **30** | **34.5** | **38** |
| INVENTORY | 3.21 | 1.31 | | | | | |
| POSTING | | | | | | | |
| OPERATING | 4.16 | 1.69 | 2.77 | 1.67 | 2.86 | 2.52 | 2.50 |
| COMMENTS: | | | | | | | |

## TRAFFIC MAINTENANCE NOTES

1. MAINTAIN TRAFFIC ON AN OFF SITE DETOUR.
2. TRAFFIC SIGNALS ARE NOT NECESSARY.
3. SIDEWALKS ARE NOT NECESSARY

## DESIGN VALUES

| | | |
|---|---|---|
| 1. DESIGN LIVE LOAD | | HL-93 |
| 2. FUTURE PAVEMENT | $d_p$: | 3.0 INCH |
| 3. DESIGN SPAN | $L$: | 128.00 FT |
| 4. MIN. MID-SPAN POS. CAMBER @ RELEASE (PRESTRESSED UNITS) | $\Delta$: | --- |
| 5. PRESTRESSING STRAND (0.375 INCH DIAMETER - LOW RELAX) | $f_y$: | 270 KSI |
| 6. PRESTRESSED CONCRETE STRENGTH | $f'_c$: | 5.0 KSI |
| 7. PRESTRESSED CONCRETE RELEASE STRENGTH | $f'_{ci}$: | 4.0 KSI |
| 8. CONCRETE, HIGH PERFORMANCE CLASS AA | $f'_c$: | 4.0 KSI |
| 9. CONCRETE, HIGH PERFORMANCE CLASS A | $f'_c$: | 4.0 KSI |
| 10. CONCRETE, HIGH PERFORMANCE CLASS B | $f'_c$: | 3.5 KSI |
| 11. CONCRETE, CLASS C | $f'_c$: | 3.0 KSI |
| 12. REINFORCING STEEL | $f_y$: | 60 KSI |
| 13. STRUCTURAL STEEL AASHTO M270 (WEATHERING) | $f_y$: | 50 & 70 KSI |
| 14. NOMINAL BEARING RESISTANCE OF SOIL | $q_n$: | 30.4 KSF |
| 15. SOIL BEARING RESISTANCE FACTOR (REFER TO AASHTO LRFD) | $\phi$: | 0.45 |
| 16. NOMINAL BEARING RESISTANCE OF ROCK | $q_n$: | 120.0 KSF |
| 17. ROCK BEARING RESISTANCE FACTOR (REFER TO AASHTO LRFD) | $\phi$: | 0.45 |
| 18. PILE RESISTANCE FACTOR | $\phi$: | --- |
| 19. LATERAL PILE DEFLECTION | $\Delta$: | --- |
| 20. BASIC WIND SPEED | $V_{3s}$: | --- |
| 21. MINIMUM GROUND SNOW LOAD | $p_g$: | --- |
| 22. SEISMIC DATA PGA : 0 | $S_s$: | --- |
| | $S_1$: | --- |
| 23. | | |
| 24. | | --- |
| 25. | | --- |
| 26. | | --- |

PROJECT NAME: **HARTFORD**

PROJECT NUMBER: **IM 091-2 (79)**

FILE NAME: **s12a132pi.dgn**
PROJECT LEADER: **K. HIGGINS**
DESIGNED BY: **W. LAMMER**
**BRIDGE 43N PRELIMINARY INFORMATION SHEE'**

PLOT DATE: 12/16/2014
DRAWN BY: **K. FRIEDLAND**
CHECKED BY: **J. SALVATORI**
SHEET 3 OF 166

**GENERAL**

1. ALL MATERIALS AND CONSTRUCTION SHALL CONFORM TO THE VERMONT AGENCY OF TRANSPORTATION 2011 STANDARD SPECIFICATIONS FOR CONSTRUCTION, 2012 AASHTO LRFD BRIDGE DESIGN SPECIFICATIONS, AND THEIR LATEST REVISIONS.

2. ON-SITE WORK SHALL NOT OCCUR BETWEEN DECEMBER 1ST AND MARCH 23ST AS PER THE PROJECT SPECIAL PROVISIONS. DEPLOYMENT OF THE SMART WORK ZONE COMPONENTS MAY BE INITIATED PRIOR TO MARCH 23RD.

3. THE CONTRACTOR WILL BE ALLOWED TO CLOSE EACH BRIDGE FOR ONE WEEKEND (TWO CONSECUTIVE DAYS), BEGINNING ON A FRIDAY AT 6PM AND ENDING THE FOLLOWING MONDAY AT 6 AM, TO PERFORM REPLACEMENT OF THE EXISTING SUPERSTRUCTURE. DURING EACH BRIDGE CLOSURE PERIOD (BCP) THE CONTRACTOR WILL BE ALLOWED TO WORK 24 HOURS PER DAY. APPROVED CLOSURE DATES AND FURTHER INFORMATION & REQUIREMENTS ARE IDENTIFIED IN THE PROJECT SPECIAL PROVISIONS.

4. FOR INFORMATION REGARDING UTILITIES, SEE THE PROJECT SPECIAL PROVISIONS.

5. ALL DIMENSIONS SHOWN IN THE PLANS ARE HORIZONTAL OR VERTICAL AND ARE GIVEN AT 68 DEGREES FAHRENHEIT, UNLESS NOTED OTHERWISE

6. ALL PRECAST CONCRETE ELEMENTS ARE TO BE FABRICATED TO THE SPECIFIED DIMENSIONS WITHIN THE TOLERANCES DICTATED IN THE PRECAST/PRESTRESSED CONCRETE INSTITUTE TOLERANCE MANUAL FOR PRECAST AND PRESTRESSED CONCRETE CONSTRUCTION, MNL 135-00, AND ITS LATEST REVISIONS.

7. THE CONTRACTOR IS RESPONSIBLE FOR MAINTANANCE OF THE BRIDGES AND APPROACHES TO THE SATISFACTION OF THE ENGINEER ONCE THEY BEGIN ANY DEMOLITION/DECONSTRUCTION OF THE EXISTING BRIDGE OR ITS COMPONENTS PRIOR TO THE BRIDGE CLOSURE PERIOD. EXAMPLES OF SUCH ACTIVITIES INLCUDE, BUT ARE NOT LIMITED TO SAWCUTTING, PAVEMENT REMOVAL, AND EXCAVATION OF THE EXISTING ROADWAY SUBBASE.

8. ORIGINAL GROUND ELEVATIONS ARE BASED ON LIDAR DATA SUPPLEMENTED BY GROUND SURVEY ON AND BELOW THE EXISTING BRIDGES. THE CONTRACTOR SHALL VERIFY ALL EXISTING ELEVATIONS AND NOTIFY THE RESIDENT ENGINEER OF ANY DISCREPANCIES.

**EARTHWORK AND RELATED ITEMS**

9. REMOVAL OF THE EXISTING SUPERSTRUCTURES SHALL BE PAID FOR UNDER ITEM 529.20 "PARTIAL REMOVAL OF STRUCTURE (SUPERTRUCTURE 43S)" OR ITEM 529.20 "PARTIAL REMOVAL OF STRUCTURE (SUPERTRUCTURE 43N)" AS APPLICABLE.

10. REMOVAL OF THE EXISTING SUBSTRUCTURES TO THE ELEVATIONS SPECIFIED IN THE PLANS SHALL BE PAID FOR UNDER ITEM 529.20 "PARTIAL REMOVAL OF STRUCTURE (SUBSTRUCTURE 43S)" OR ITEM 529.20 "PARTIAL REMOVAL OF STRUCTURE (SUBSTRUCTURE 43N)" AS APPLICABLE.

11. THE COST OF BEDROCK EXCAVATION SHALL BE PAID UNDER ITEM 204.25,"STRUCTURE EXCAVATION". ALL OVERBREAKAGE SHALL BE REPLACED WITH "CONCRETE, CLASS C". A MAXIMUM OF 6 INCHES AVERAGE OVERBREAKAGE DEPTH SHALL BE PAID FOR. ANY ADDITIONAL BEDROCK EXCAVATION OR CONCRETE SHALL BE AT THE CONTRACTOR'S EXPENSE. REFER TO "TYPICAL EARTHWORK SECTION FOR ABUTMENT ON SPREAD FOOTING" ON SHEET "TYPICAL SECTIONS 2".

**STRUCTURAL STEEL**

12. THE EXISTING STRUCTURAL STEEL IS PAINTED WITH A MATERIAL THAT MAY CONTAIN LEAD. THE CONTRACTOR SHALL FOLLOW ALL APPLICABLE REGULATIONS WHEN HANDLING AND WORKING WITH THIS STEEL. THE REMOVED STRUCTURAL STEEL IS THE PROPERTY OF THE CONTRACTOR. THE CONTRACTOR SHALL INDEMNIFY AND HOLD THE STATE, ITS OFFICERS, AND EMPLOYEES HARMLESS CONCERNING THE CONTRACTOR'S USE OR DISPOSITION OF THE REMOVED EXISTING STRUCTURAL STEEL.

13. THE BOTTOM FLANGE OF THE GIRDERS FOR BRIDGE 43N SHALL CONFORM TO ASTM A709 GRADE HPS 70W AND SHALL BE PAID UNDER SPECIAL PROVISION (STRUCTURAL STEEL, PLATE GIRDER, GRADE HPS 70W). ALL OTHER STRUCTURAL STEEL SHALL CONFORM TO AASHTO M270/M270M GRADE 50W AND SHALL BE PAID FOR UNDER ITEM 506.55, "STRUCTURAL STEEL (PLATE GIRDER)".

14. STRUCTURAL STEEL MEMBERS DESIGNATED "CVN" IN THE PLANS SHALL BE CHARPY V-NOTCH TESTED IN ACCORDANCE WITH SUBSECTION 714.01 OF THE STANDARD SPECIFICATIONS.

15. ALL FIELD CONNECTIONS SHALL BE MADE USING 7/8 INCH DIAMETER HIGH-STRENGTH BOLTS. UNLESS OTHERWISE NOTED, HOLE DIAMETER SHALL BE 15/16 INCH. ANY CONNECTIONS NOT DESIGNATED SHALL BE DETAILED BY THE FABRICATOR AND SUBMITTED TO THE PROJECT MANAGER FOR APPROVAL.

16. AFTER THE GIRDERS HAVE BEEN ERECTED, ELEVATIONS SHALL BE TAKEN ALONG THE TOP OF THE GIRDERS AS DIRECTED BY THE RESIDENT ENGINEER, FOR USE IN DETERMINING HEIGHT OF DECK PANEL BEDDING STRIPS. AFTER THE DECK PANELS HAVE BEEN SET AND BEFORE THE GROUT BED IS PLACED, THE CONTRACTOR SHALL RE-PROFILE THE TOP FLANGES OF THE GIRDERS AS DIRECTED BY THE RESIDENT ENGINEER, FOR USE IN DETERMINING SCREED RAIL ELEVATIONS AND CHAIR HEIGHTS FOR REINFORCING STEEL.

17. FLEMING BRACKETS OR SIMILAR FALSEWORK SHALL BE PLACED AT A MAXIMUM SPACING OF 4 FEET. THE BRACKETS SHALL BEAR NEAR THE BOTTOM FLANGE AND IN NO CASE SHALL THEY BEAR ABOVE THE BOTTOM QUARTER OF THE WEB. THE DESIGN OF FALSEWORK SHALL BE THE RESPONSIBILITY OF THE CONTRACTOR.

18. ANY BOLT HOLES IN THE WEBS OF FASCIA GIRDERS NOT OTHERWISE FILLED SHALL BE FILLED WITH BUTTON HEAD OR HEX HEAD BOLTS. THE BOLTS SHALL BE TIGHTENED IN ACCORDANCE WITH SUBSECTION 506.19 OF THE STANDARD SPECIFICATIONS.

19. GIRDER WEBS AND DIAPHRAGMS SHALL BE PLUMB IN FINAL POSITION. GIRDER ENDS SHALL BE VERTICAL IN FINAL POSITION.

20. THE CONTRACTOR IS RESPONSIBLE FOR LOCATING THE BEARING STIFFENERS FOR THE LATERAL SLIDE SUPPORT.

**CONCRETE**

21. SUBSTRUCTURE CONCRETE SHALL BE HIGH PERFORMANCE CLASS B AND SHALL BE PAID FOR UNDER ITEM 501.34, "CONCRETE, HIGH PERFORMANCE CLASS B".

22. DECK (INCLUDING CURTAIN WALLS AND APPROACH SLAB BRACKETS) AND CURB CONCRETE SHALL BE HIGH PERFORMANCE CLASS A AND SHALL BE PAID FOR UNDER ITEM 501.33, "CONCRETE, HIGH PERFORMANCE CLASS A".

23. APPROACH SLABS SHALL BE PRECAST CONCRETE PAID FOR UNDER ITEM 900.645, (SPECIAL PROVISION CONTRACTOR-FABRICATED PRECAST CONCRETE STRUCTURE)(APPROACH SLAB #1)- (APPROACH SLAB #4) AS APPROPRIATE.

24. CONCRETE FOR SUBFOOTING SHALL BE PAID FOR UNDER ITEM 541.30, "CONCRETE, CLASS C". PAYMENT FOR SUBFOOTING CONCRETE WILL BE MADE ONLY FOR CONCRETE WITHIN THE LIMITS FOR SUBFOOTING SHOWN ON THE PLANS.

25. CONCRETE FOR THE PREFABRICATED APPROACH SLAB CLOSURE POURS SHALL MEET THE REQUIREMENTS OF ITEM 900.608 "SPECIAL PROVISION (HIGH PERFORMANCE CONCRETE, RAPID SET)".

26. SURFACES OF BRIDGE SEATS UNDER BEARING DEVICES SHALL BE LEVEL. ALL OTHER AREAS OF BRIDGE SEATS SHALL BE SLOPED 1/2 INCH PER FOOT TOWARDS MIDSPAN. THE ENTIRE BRIDGE SEAT SURFACE SHALL BE GIVEN A FLOAT FINISH.

27. CONCRETE PORTIONS OF ABUTMENTS AND WINGWALLS ABOVE ADJACENT BRIDGE SEAT ELEVATIONS SHALL NOT BE PLACED UNTIL FINISH GRADES HAVE BEEN DETERMINED BY THE RESIDENT ENGINEER.

28. THE DECK IS TO BE POURED IN ONE CONTINUOUS POUR WITH A MAXIMUM DURATION OF EIGHT HOURS. IF CIRCUMSTANCES BEYOND THE CONTRACTOR'S CONTROL PREVENT THIS FROM BEING ACCOMPLISHED, A TRANSVERSE CONSTRUCTION JOINT SHALL BE USED BETWEEN ADJACENT POURS. A MINIMUM 96 HOUR DELAY BETWEEN ADJACENT POURS SHALL BE OBSERVED.

29. THE MINIMUM APPROACH SLAB JOINT DESIGN STRENGTH IS 4,000 PSI, WHICH SHALL BE OBTAINED PRIOR TO LOADING THE APPROACH SLABS. (REFER TO SPECIAL PROVISIONS)

30. CORRUGATED POST-TENSIONING DUCTS IN THE PRECAST APPROACH SLABS FOR DOWEL CONNECTIONS SHALL BE CONSTRUCTED FROM EITHER POLYETHYLENE OR POLYPROPYLENE. THE DUCT SHALL HAVE A MINIMUM MATERIAL THICKNESS OF 0.080 IN. +/- 0.010 IN. AND SHALL HAVE A WHITE COATING ON THE OUTSIDE OR SHALL BE OF WHITE MATERIAL WITH ULTRAVIOLET STABILIZERS ADDED. POLYETHYLENE DUCT SHALL BE FABRICATED FROM RESINS MEETING OR EXCEEDING THE REQUIREMENTS OF ASTM D 3350 WITH A CELL CLASSIFICATION OF 345464A. POLY PROPYLENE DUCT SHALL BE FABRICATED FROM RESINS MEETING OR EXCEEDING THE REQUIREMENTS OF ASTM D 4101 WITH A CELL CLASSIFICATION RANGE OF PP0340B44544 TO PP0340B65884. ALL COSTS ASSOCIATED WITH PLACING THE DUCTS SHALL BE INCLUDED IN THE BID PRICE FOR EACH 900.645, "SPECIAL PROVISION, (CONTRACTOR-FABRICATED PRECAST CONCRETE STRUCTURE)" CONTRACT ITEM AS APPROPRIATE.

31. GROUT USED TO FILL CORRUGATED POST-TENSIONING DUCTS IN THE PRECAST APPROACH SLABS FOR DOWEL CONNECTIONS SHALL BE MORTAR, TYPE IV IN ACCORDANCE WITH SECTION 540 – PRECAST CONCRETE. ALL COSTS ASSOCIATED WITH PROVIDING AND PLACING GROUT FOR APPROACH SLAB DOWEL CONNECTIONS SHALL BE INCLUDED IN THE BID PRICE FOR ITEM 900.645, SPECIAL PROVISION (CONTRACTOR-FABRICATED PRECAST CONCRETE STRUCTURE)(APPROACH SLAB #1)- (APPROACH SLAB #4) AS APPROPRIATE.

32. WATER REPELLENT, SILANE SHALL BE APPLIED TO ALL EXPOSED CONCRETE SURFACES, EXCEPT THE UNDERSIDE OF THE DECK BETWEEN DRIP NOTCHES.

33. JOINTS AND SCORE MARKS IN CONCRETE SHALL BE CONSTRUCTED AS SHOWN IN THE PLANS OR AS DIRECTED BY THE RESIDENT ENGINEER.

34. THE KEY IN CONCRETE CONSTRUCTION JOINTS SHALL BE MONOLITHIC AND CONTINUOUS FOR THE FULL LENGTH OF THE JOINT.

35. ALL REINFORCING STEEL IN THE CAST IN PLACE CONCRETE DECK, BACKWALL, AND WINGWALLS ABOVE THE HORIZONTAL CONSTRUCTION JOINT SHALL MEET THE REQUIREMENTS FOR LEVEL III CORROSION RESISTANCE, AND BE PAID FOR UNDER ITEM 507.13, "REINFORCING STEEL, LEVEL III".

36. ALL REINFORCING STEEL IN THE BRIDGE RAILING SHALL MEET THE REQUIREMENTS FOR LEVEL III CORROSION RESISTANCE, AND BE INCLUDED IN THE UNIT PRICE FOR ITEM 525.70, "BRIDGE RAILING, CONCRETE F-SHAPE".

37. ALL REINFORCING STEEL IN THE PRECAST PRESTRESSED DECK PANELS SHALL MEET THE REQUIREMENTS FOR LEVEL III CORROSION RESISTANCE, AND BE INCLUDED IN THE UNIT PRICE FOR ITEM 900.670, SPECIAL PROVISION (PRECAST PRESTRESSED CONCRETE DECK PANEL)(3 ½").

38. ALL REINFORCING STEEL IN THE PRECAST APPROACH SLABS SHALL MEET THE REQUIREMENTS OF LEVEL II CORROSION RESISTANCE OR HIGHER, AND BE INCLUDED IN THE UNIT PRICE FOR ITEM 900.645, SPECIAL PROVISION (CONTRACTOR-FABRICATED PRECAST CONCRETE STRUCTURE)(APPROACH SLAB #1)- (APPROACH SLAB #4) AS APPROPRIATE.

39. ALL REINFORCING STEEL IN THE ABUTMENT FOOTINGS, STEM, WINGWALLS BELOW THE HORIZONTAL CONSTRUCTION JOINT, AND THE INDEPENDENT RETAINING WALLS SHALL MEET THE REQUIREMENTS FOR LEVEL I CORROSION RESISTANCE, AND BE PAID FOR UNDER ITEM 507.11, "REINFORCING STEEL, LEVEL I".

40. CUTTING AND REPAIRING DAMAGED AREAS OF COATED REINFORCING STEEL SHALL BE PERFORMED IN ACCORDANCE WITH SUBSECTION 507.04 OF THE STANDARD SPECIFICATIONS.

41. MINIMUM COVER FOR REINFORCING STEEL SHALL BE AS INDICATED IN THE PLANS.

42. REINFORCING STEEL PLACEMENT TOLERANCES SHALL BE:
    SPACING: +/- 1 INCH
    CLEARANCE: +/- 1/4 INCH

**PRECAST PRESTRESSED DECK PANELS**

43. DESIGN VALUES:
    a. CONCRETE COMPRESSIVE STRENGTH: f'c = 5 KSI
    b. CONCRETE COMPRESSIVE STRENGTH AT RELEASE: f'ci = 4 KSI
    c. PRESTRESSING STRANDS: 0.375 INCH DIAMETER, 270 KSI, LOW-RELAXATION 7-WIRE STRANDS
    d. JACKING FORCE PER PRESTRESSING STRAND = 17.2 KIPS
    e. ASSUMED MODULUS OF ELASTICITY FOR THE STRAND IS 28,500 KSI.

44. BEDDING STRIPS ACTING AS TEMPORARY SUPPORTS FOR THE PANELS SHALL BE CUT TO THE REQUIRED HEIGHT AFTER THE GIRDERS HAVE BEEN ERECTED AND PROFILED.

45. THE MINIMUM HEIGHT OF THE BEDDING STRIPS IS 1". IF THIS CANNOT BE MET, THE PROFILE GRADE MUST BE ADJUSTED.

46. BEDDING STRIPS SHALL BE HIGH-DENSITY EXTRUDED POLYSTYRENE WITH A MINIMUM COMPRESSIVE STRENGTH OF 60 PSI MEETING THE REQUIREMENTS OF SUBSECTION 735.01.

47. BEDDING STRIPS SHALL BE ATTACHED TO THE TOP FLANGE OF THE GIRDERS WITH AN APPROVED HIGH STRENGTH ADHESIVE. THE ADHESIVE SHALL BE ALLOWED TO CURE PER THE MANUFACTURER'S INSTRUCTIONS BEFORE SETTING PANELS.

48. TEMPORARY BRACING BETWEEN PANELS SHALL BE PROVIDED AS REQUIRED TO PREVENT PANEL MOVEMENT TRANSVERSE TO THE GIRDERS.

49. PANELS SHALL NOT BE USED TO SUPPORT HEAVY LOADS UNTIL THE FULL DECK IS CAST AND CURED.

50. THE GROUT BED SUPPORTING THE PANELS SHALL BE ALLOWED TO CURE FOR A MINIMUM OF 3 DAYS PRIOR TO PLACING THE CONCRETE DECK.

| | |
|---|---|
| PROJECT NAME: HARTFORD | |
| PROJECT NUMBER: IM 091-2(79) | |
| FILE NAME: sl2al32gen.dgn | PLOT DATE: 15-DEC-2014 |
| PROJECT LEADER: K. HIGGINS | DRAWN BY: R. KLINEFELTER |
| DESIGNED BY: W. LAMMER | CHECKED BY: W. LAMMER |
| GENERAL NOTES SHEET 1 | SHEET 4 OF 166 |

51. THE CONTRACTOR IS ADVISED THAT DURING THE PLACEMENT OF CONCRETE FOR THE TOP PORTION OF THE DECK, THE EXTERIOR GIRDERS MAY DEFLECT MORE THAN THE INTERIOR GIRDERS DUE TO THE PANEL DEAD LOAD DISTRIBUTION. ADJUSTMENTS TO THE SCREED MACHINE MAY BE NECESSARY TO ACCOUNT FOR THIS.

52. MORTAR, TYPE IV WITH EXPANSIVE ADDITIVES THAT REQUIRE ALL SURFACES TO BE CONFINED SHALL NOT BE USED FOR THE GROUT BEDS UNLESS THE CONTRACTOR PROVIDES A METHOD AND MEANS FOR CONFINEMENT THAT IS ACCEPTABLE TO THE ENGINEER.

53. IF THE CONTRACTOR ELECTS TO USE A TYPE IV MORTAR THAT IS NOT ON THE APPROVED PRODUCTS LIST OR OF THE STATED FORMULATION IN SECTION 707.03, THEN THE MIX MUST MEET 707.03 MORTAR, TYPE IV (c) PERFORMANCE REQUIREMENTS. SECTION 707.03(c)(2) MAY BE OMITTED IF THE MATERIAL WILL NOT HAVE DIRECT EXPOSURE TO MOISTURE IN FREEZE-THAW CONDITIONS. TESTING SHALL BE DONE BY AN INDEPENDENT LABORATORY ACCREDITED BY AMRL IN AASHTO T106 OR ASTM C109 AND IS CAPABLE OF PERFORMING ASTM C1090 AND AASHTO T106 (MODIFIED PER VAOT) OR ASTM C666 (MODIFIED PER VAOT). THE MIX SHALL BE TESTED AT THE MAXIMUM WATER/CEMENTIOUS RATIO.

54. ALL COSTS ASSOCIATED WITH PROVIDING AND PLACING BEDDING STRIPS AND MORTAR FOR GROUT BEDS SHALL BE INCLUDED IN THE BID PRICE FOR ITEM 900.670, SPECIAL PROVISION (PRECAST PRESTRESSED CONCRETE DECK PANEL)(3 ½").

**GEOTECHNICAL INFORMATION**

| GEOTECHNICAL DESIGN PARAMETERS | SOIL | ROCK |
|---|---|---|
| NOMINAL BEARING RESISTANCE (KSF) | 30.4 | 120.0 |
| BEARING RESISTANCE FACTOR | 0.45 | 0.45 |
| RET. WALL FOUNDATION SOIL, UNIT WEIGHT (PCF) | 125 | --- |
| RET. WALL FOUNDATION SOIL, FRICTION ANGLE (DEGREES) | 40 | --- |
| GRANULAR BACKFILL FOR STRUCTURES, UNIT WEIGHT (PCF) | 140 | --- |
| GRANULAR BACKFILL FOR STRUCTURES, FRICTION ANGLE (DEGREES) | 34 | --- |
| EARTH PRESSURE COEFFICIENT, ACTIVE | 0.28 | --- |

**SUBSTRUCTURES ON MICROPILES**

55. ABUTMENTS #1 - #3 WILL BE CONSTRUCTED ON MICROPILES.

56. NO MICROPILE LOAD TESTING IS REQUIRED BASED ON THIS DESIGN.

57. THE MICORPILES SHALL BE TYPE A MICROPILES, GROUTED UNDER GRAVITY HEAD ONLY.

58. PLUNGE LENGTH, SEATING LENGTH AND UNCASED LENGTH SHALL BE IN COMPETENT ROCK.

59. THE BATTERED PILES SHALL INCLUDE A PLUNGE LENGTH. THIS PLUNGE LENGTH IS PART OF THE BOND ZONE. GROUT SHALL SURROUND THE CASING IN AN OVERSIZED HOLE FOR THE PLUNGE LENGTH.

60. GROUT SHALL HAVE A MINIMUM 28 DAY COMPRESSIVE STRENGTH OF 4500 PSI WHEN TESTED IN ACCORDANCE WITH AASHTO T106.

61. BEARING PLATES SHALL MEET THE REQUIREMENTS OF ASTM A709 GRADE 50.

62. THE #14 THREADED STEEL BAR SHALL HAVE A MINIMUM YIELD STRENGTH OF 75 KSI.

63. STATIC LOADS, SUCH AS FORMS, REINFORCING STEEL, OR OTHER MATERIALS NECESSARY FOR CONSTRUCTION, SHALL NOT BE PLACED ON THE MICROPILES UNTIL THE GROUT HAS OBTAINED A COMPRESSIVE STRENGTH OF 2000 PSI .

64. MICROPILE DESIGN VALUES:

| | MAXIMUM FACTORED COMPRESSIVE AXIAL LOAD | |
|---|---|---|
| ABUTMENT | FRONT ROW (BATTERED) | BACK ROW (PLUMB) |
| ABUT 1 | 392 KIPS | 128 KIPS |
| ABUT 2 | 503 KIPS | 121 KIPS |
| ABUT 3 | 444 KIPS | 179 KIPS |

**SUBSTRUCTURES ON BEDROCK**

65. IT IS ANTICIPATED THAT BEDROCK WILL BE ENCOUNTERED AT ABUTMENT #4.

66. ABUTMENT #4 HAS BEEN DESIGNED FOR THE FOOTING ELEVATIONS SHOWN ON THE PLANS. THE INTENTION IS TO USE SUBFOOTINGS OF CONCRETE, CLASS "C" IN AREAS WHERE THE LEDGE IS MORE THAN 6 INCHES BELOW THE DESIGN BOTTOM OF FOOTING ELEVATIONS.

67. UPON COMPLETION OF THE EXCAVATION FOR SUBSTRUCTURES FOUNDED ON BEDROCK, AND PRIOR TO PLACING FORMWORK, THE RESIDENT ENGINEER SHALL NOTIFY PROJECT MANAGER AND THE VTRANS GEOLOGIST. THE SOILS AND FOUNDATION ENGINEER WILL DETERMINE IF THE BEDROCK IS COMPETENT TO OBTAIN THE NOMNAL BEARING RESISTANCE AS SHOWN ON THE PLANS. FIVE (5) WORKING DAYS FROM NOTICIFCATION SHALL BE ALLOWED TO MAKE THE INSPECTION AND THE DETERMINATION FOR THE COMPETENCY OF THE BEDROCK.

68. ONCE THE ELEVATION OF THE COMPETENT BEDROCK HAS BEEN DETERMINED, THE CONTRACTOR SHALL PROVIDE A BEDROCK PROFILE TO THE PROJECT MANAGER IN ORDER TO DETERMINE WHETHER THE DESIGN BOTTOM OF FOOTING ELEVATION SHALL BE LOWERED, AND WHETHER A SUBFOOTING SHALL BE REQUIRED. FOOTING ELEVATIONS SHALL NOT BE ADJUSTED WITHOUT APPROVAL OF THE PROJECT MANAGER. THREE (3) WORKING DAYS FROM RECEIPT OF THE BEDROCK PROFILE SHALL BE ALLOWED TO MAKE THIS DETERMINATION. NO WORK SHALL BE DONE ON THE FOOTINGS UNTIL A REPLY IS RECEIVED. THE MAXIMUM TOP OF FOOTING ELEVATION IS 548.00 FEET.

69. FOOTINGS OR SUBFOOTINGS FOR SUBSTRUCTURES FOUNDED ON BEDROCK SHALL BE PLACED ON CLEAN COMPETENT ROCK. ALL LOOSE ROCK AND DEBRIS SHALL BE REMOVED.

70. THE LIMITS OF ANY SUBFOOTING SHALL BE 1'-0" OUTSIDE OF THE HORIZONTAL LIMITS OF THE FOOTING. THE TOP SURFACE OF THE SUBFOOTING SHALL BE INTENTIONALLY ROUGHENED TO 1 / 4" AMPLITUDE TO HELP PREVENT SLIDING AT THE SUBFOOTING/FOOTING INTERFACE.

71. DOWELS SHALL BE DRILLED AND GROUTED INTO BEDROCK AS SHOWN ON THE PLANS. THE DOWELS SHALL HAVE A 2'-0" MINIMUM EMBEDMENT INTO COMPETENT BEDROCK AND SHALL EXTEND INTO THE FOOTING A MINIMUM OF 1'-6". IF A SUBFOOTING IS REQUIRED THE DOWELS SHALL EXTEND THROUGH THE SUBFOOTING INTO THE FOOTING. THE DOWELS SHALL MEET THE REQUIREMENTS FOR LEVEL III CORROSION RESISTANCE, AND BE PAID FOR UNDER ITEM 507.13, "REINFORCING STEEL, LEVEL III". VTRANS WILL PAY FOR 2 LINEAR FEET OF DRILLING AND GROUTING INTO BEDROCK AT EACH DOWEL LOCATION. IF THE CONTRACTOR ELECTS TO DRILL THE DOWELS THROUGH THE SUBFOOTING, IT WILL BE AT THEIR OWN EXPENSE.

72. ANY CONCRETE REQUIRED FOR SUBFOOTINGS SHALL BE PAID FOR AS ITEM 541.30 "CONCRETE, CLASS C". AN ESTIMATED QUANTITY OF CLASS C CONCRETE HAS BEEN INCLUDED IN THESE PLANS.

**TRAFFIC CONTROL**

73. THE CONTRACTOR SHALL BE RESPONSIBLE FOR SUPPLYING A SITE SPECIFIC TRAFFIC CONTROL PACKAGE IDENTIFYING CONSTRUCTION ACTIVITIES BEFORE, DURING, AND AFTER THE BRIDGE CLOSURE PERIOD. THE CONTRACTOR SHALL SUBMIT A DETAILED TRAFFIC CONTROL PLAN TO THE ENGINEER FOR ALL STAGES OF CONSTRUCTION, FOR APPROVAL PER SUBSECTION 105.03. ALL COSTS SHALL BE INCLUDED IN ITEM 641.10 "TRAFFIC CONTROL (I-91 NORTHBOUND)", ITEM 641.10 "TRAFFIC CONTROL (I-91 SOUTHBOUND)" AND ITEM 641.10 "TRAFFIC CONTROL (US RT 5)".

74. ALL ITEMS REQUIRED TO IMPLEMENT THE CONTRACTOR'S TRAFFIC CONTROL PLAN WILL NOT BE PAID FOR DIRECTLY BUT WILL BE CONSIDERED INCLUDED IN THE BID PRICE FOR ITEM 641.10 "TRAFFIC CONTROL (I-91 NORTHBOUND)", ITEM 641.10 "TRAFFIC CONTROL (I-91 SOUTHBOUND)" AND ITEM 641.10 "TRAFFIC CONTROL (US RT 5)". THOSE ITEMS ARE BUT NOT LIMITED TO:

- TYPE III BARRICADES
- TYPE III BARRICADES (MOD.)
- RETROREFLECTIVE PLASTIC DRUMS
- TRAFFIC CONES
- TEMPORARY PAVEMENT MARKINGS
- PAVEMENT MARKING REMOVAL
- TRAFFIC SIGNS, TYPE A
- SQUARE TUBE SIGN POST AND ANCHOR
- CHANNELIZING DEVICES
- ENERGY ABSORPTION ATTENUATOR
- SOLID BARRIER FENCE

75. ALL SIGNING SHALL BE IN ACCORDANCE WITH THE LATEST EDITION OF THE MUTCD. FOR ADDITIONAL SIGNING INSTRUCTIONS SEE THE T SERIES OF THE STANDARDS. WHERE CONFLICTS EXIST, THE MUTCD SHALL GOVERN.

76. THE CONTRACTOR SHALL ERECT AND MAINTAIN ALL TEMPORARY ON AND OFF PROJECT SIGNS AND TRAFFIC CONTROL DEVICES AS SHOWN IN THE PLANS AND DIRECTED BY THE ENGINEER. PAYMENT FOR THIS WORK SHALL BE CONSIDERED INCIDENTAL TO ITEM 641.10 "TRAFFIC CONTROL (I-91 NORTHBOUND)", ITEM 641.10 "TRAFFIC CONTROL (I-91 SOUTHBOUND)" AND ITEM 641.10 "TRAFFIC CONTROL (US RT 5)".

77. FULL ACCESS TO ALL SIDE ROAD AND DRIVES WITHIN THE PROJECT LIMITS SHALL BE MAINTAINED AT ALL TIMES. THIS WORK SHALL BE CONSIDERED INCIDENTAL TO ITEM 641.10 "TRAFFIC CONTROL (US RT 5)".

78. THE QUANTITY OF ITEM 621.90 TEMPORARY TRAFFIC BARRIER WAS CALCULATED BASED ON THE MAXIMUM AMOUNT OF BARRIER NECESSARY AT ANY ONE TIME DURING THE PROJECT DURATION. RE-USE OF THIS BARRIER FOR SUBSEQUENT PHASES OF CONSTRUCTION SHALL BE PAID AS ITEM 621.95 "REMOVE AND RESET TEMPORARY TRAFFIC BARRIER".

79. CONTINGENCY PLANS ARE PROVIDED IN THE TRANSPORTATION MANAGEMENT PLAN. IN THE EVENT OF AN INCIDENT IN THE WORK ZONE, THE CONTRACTOR SHALL IMPLEMENT THE APPROPRIATE CONTINGENCY PLAN WITHIN 30 MINUTES OF THE INCIDENT. ALL ITEMS ASSOCIATED WITH THE CONTINGENCY PLAN WILL BE PAID UNDER THE APPROPRIATE TRAFFIC CONTROL ITEM.

80. DURING EACH BRIDGE BCP A TOW TRUCK WILL BE ONSITE TO IMMEDIATELY REMOVE ANY DISABLED VEHICLES WITHIN THE PROJECT AREA. ALL COSTS SHALL BE INCLUDED IN ITEMS 641.10 TRAFFIC CONTROL (I-91 NORTHBOUND) AND TRAFFIC CONTROL (I-91 SOUTHBOUND)

81. A UTO SHALL BE STATIONED AT THE VA MEDICAL CENTER ENTRANCE (VETERANS DRIVE) AND US 5 WEEKDAYS FROM 4:00PM TO 5:00PM FOR THE DURATION OF THE PROJECT OR AS DIRECTED BY THE ENGINEER.

82. A UTO SHALL BE STATIONED AT THE INTERSECTION OF I-91 NORTHBOUND RAMPS AND US5 DURING THE DAYLIGHT HOURS FOR THE DURATION OF THE PROJECT OR AS DIRECTED BY THE ENGINEER.

83. SEE SPECIAL PROVISIONS FOR RESTRICTIONS ON TRAFFIC DELAYS.

84. A SOLID BARRIER FENCE SHALL BE INSTALLED DIRECTLY ON TOP OF THE TEMPORARY BARRIER ON EITHER SIDE OF US 5. THE FENCE SHALL HAVE A MINIMUM HEIGHT OF 6'-0".THIS WORK SHALL BE CONSIDERED INCIDENTAL TO ITEM 641.10 "TRAFFIC CONTROL (US RT 5)".

**PEDESTRIAN TRAFFIC CONTROL**

85. THE CONTRACTOR SHALL PROTECT PEDESTRIAN THROUGH MOVEMENTS FROM ONE END OF THE CONSTRUCTION AREA TO THE OTHER, ON AT LEAST ONE SIDE OF US 5 DURING CONSTRUCTION ALL TIMES WITH THE EXCEPTION OF EACH BCP. ALL COSTS SHALL BE INCLUDED IN ITEM 900.645, "SPECIAL PROVISION (PUBLIC PROTECTION FOR BRIDGE PROJECTS)".

86. THE SITE SPECIFIC TRAFFIC CONTROL PLANS FOR US 5 WILL INCLUDE ALL SIGNAGE FOR PEDESTRIAN MOBILITY. THIS WORK SHALL BE CONSIDERED INCIDENTAL TO ITEM 641.10 "TRAFFIC CONTROL (US RT 5)".

87. MAXIMUM PEDESTRIAN MOBILITY DELAYS SHALL BE AS IDENTIFIED IN THE SPECIAL PROVISIONS FOR TEMPORARY TRAFFIC DELAYS.

88. DURING EACH BCP, A SHUTTLE SHALL TRANSPORT PEDESTRIANS THRU THE WORK ZONE. THIS WORK SHALL BE PAID FOR UNDER ITEM 900.650 SPECIAL PROVISION (PEDESTRIAN SHUTTLE)(N.A.B.I.).

**TEMPORARY TRAFFIC SIGNALS**

89. THE BURN IN TIME FOR THE TEMPORARY SIGNALS SHALL BE REDUCED TO A WEEKEND FROM FRIDAY 6PM TO MONDAY 6AM. PCMS SHALL BE PLACED PRIOR TO SIGNALS DURING THE BURN IN TIME WARNING THE TRAVELLING PUBLIC.

90. ALL MATERIALS AND CONSTRUCTION SHALL CONFORM TO THE STATE OF VERMONT AGENCY OF TRANSPORTATION'S (VTrans) "STANDARD SPECIFICATIONS FOR CONSTRUCTION", DATED 2011, WITH CURRENT MODIFICATIONS.

91. TEMPORARY TRAFFIC SIGNAL SYSTEM SHALL BE DESIGNED AND INSTALLED IN ACCORDANCE WITH CONTRACT ITEM 678.40 – TEMPORARY TRAFFIC SIGNAL SYSTEM.

92. DESIGN OF THE SIGNAL SUPPORTS AND ANY REQUIRED GUYING SHALL BE THE RESPONSIBILITY OF THE CONTRACTOR.

93. SIGNAL FACES SHALL BE L.E.D AND CONSIST OF 12" LENSES (RED, YELLOW AND GREEN).

PROJECT NAME: HARTFORD
PROJECT NUMBER: IM 091-2(79)

FILE NAME: sl2al32gen.dgn
PROJECT LEADER: K. HIGGINS
DESIGNED BY: W. LAMMER
GENERAL NOTES SHEET 2

PLOT DATE: 15-DEC-2014
DRAWN BY: R. KLINEFELTER
CHECKED BY: W. LAMMER
SHEET 5 OF 166

94. THE BOTTOM OF THE HOUSING OF A SIGNAL FACE SUSPENDED OVER A ROADWAY SHALL NOT BE LESS THAN 16.5 FEET NOR MORE THAN 19.0 FEET ABOVE THE PAVEMENT GRADE AT THE CENTER OF THE ROADWAY. THE BOTTOM OF A SIGNAL FACE NOT MOUNTED OVER A ROADWAY SHALL NOT BE LESS THAN 8.0 FEET NOR MORE THAN 15.0 FEET ABOVE THE GROUND. CAUTION SHOULD BE USED TO ENSURE COMPLIANCE WITH THE HEIGHT REQUIREMENTS IN THE EVENT THE NEW APPROACH GRADES DIFFER SIGNIFICANTLY FROM THE OLD ROADWAY GRADE.

95. SIGNAL FACES FOR ANY ONE APPROACH SHALL NOT BE LESS THAN 8 FEET APART MEASURED HORIZONTALLY BETWEEN CENTER FACES.

96. SIGNAL HEADS MAY BE HUNG ON A SPAN WIRE OR ON A CANTILEVER MAST ARM. AT LEAST ONE SIGNAL HEAD SHALL BE UNMISTAKABLY IN LINE WITH THE CENTER OF APPROACHING TRAFFIC AT ALL TIMES. THE SECOND SIGNAL HEAD MAY BE POST MOUNTED, LOCATED AT A DISTANCE OF 14.5 FEET FROM THE CENTER OF THE APPROACH LANE WHEN THE STOP BAR IS 40 FEET FROM THE SIGNAL HEAD. CONSULT THE LATEST EDITION OF THE MUTCD FOR ADDITIONAL INFORMATION CONCERNING SIGNAL PLACEMENT.

97. SIGNAL HEAD PLACEMENT IS CRITICAL. HEADS SHALL BE ADJUSTED TO REFLECT LANE LOCATION CHANGES.

98. THE SIGNAL SYSTEM SHALL CONSIST OF POLES, SIGNS AND POSTS, WARNING SIGNS, LUMINAIRES, FLASHING BEACONS, ASSOCIATED PAVEMENT MARKINGS AND SIGNAL EQUIPMENT TO PROVIDE FOR AN ADEQUATE DESIGN. IT ALSO INCLUDES PERMITS AND COSTS ASSOCIATED WITH PROVIDING ELECTRICAL POWER.

99. INSTALL WIRING BETWEEN SIGNAL POLES TO PROVIDE FOR A SAFE INSTALLATION. ATTACHMENT TO UTILITY POLES SHALL BE COORDINATED BY THE CONTRACTOR WITH THE UTILITY COMPANY.

100. PLACE TEMPORARY POLES BEHIND GUARDRAIL OR OUTSIDE OF THE CLEAR ZONE.

101. POLES SUPPORTING SPAN WIRES AND/OR MAST ARMS SHALL BE ADEQUATELY BRACED OR GUYED AND SHALL NOT BE PLACED SO AS TO CREATE A HAZARD TO THE TRAVELING PUBLIC.

102. THE GPS TIME CLOCK INSTALLED AT THE INTERSECTION OF US RT 5 AND SYKES AVE SHALL REMAIN IN PLACE AFTER THE PROJECT IS COMPLETED. THIS WORK SHALL BE INCLUDED IN THE BID PRICE FOR ITEM 900.620 “SPECIAL PROVISION (GPS TIME CLOCK)”.

**MISCELLANEOUS**

103. EXISTING CONDITIONS SHEET HAS BEEN INCLUDED FOR THE CONTRACTOR TO USE FOR SUBMITTALS.

| | |
|---|---|
| PROJECT NAME: | HARTFORD |
| PROJECT NUMBER: | IM 091-2(79) |
| FILE NAME: sl2al32gen.dgn | PLOT DATE: 15-DEC-2014 |
| PROJECT LEADER: K. HIGGINS | DRAWN BY: R. KLINEFELTER |
| DESIGNED BY: W. LAMMER | CHECKED BY: W. LAMMER |
| GENERAL NOTES SHEET 3 | SHEET 6 OF 166 |

STATE OF VERMONT
AGENCY OF TRANSPORTATION

# QUANTITY SHEET 1

## SUMMARY OF ESTIMATED QUANTITIES

| ROADWAY 91S | TRAINING | EROSION CONTROL | BRIDGE 43S | FULL C.E. ITEMS | ROADWAY 91N | BRIDGE 43N | ROADWAY RT 5 | ROADWAY COMMON | GRAND TOTAL | FINAL | UNIT | ITEMS | ITEM NUMBER | ROUND |
|---|---|---|---|---|---|---|---|---|---|---|---|---|---|---|
| 1 | | | | | | | | | 1 | | LS | CLEARING AND GRUBBING, INCLUDING INDIVIDUAL TREES AND STUMPS | 201.10 | |
| 550 | | | | | 600 | | 1410 | | 2560 | | CY | COMMON EXCAVATION | 203.15 | |
| | | | | | | | 240 | | 240 | | CY | SOLID ROCK EXCAVATION | 203.16 | |
| 300 | | | | | | | | | 300 | | CY | EXCAVATION OF SURFACES AND PAVEMENTS | 203.28 | |
| | | | | | | | 70 | | 70 | | CY | SAND BORROW | 203.31 | |
| 710 | | | | | 630 | | 430 | | 1770 | | CY | GRANULAR BORROW | 203.32 | |
| | | | | | 25 | | | | 25 | | CY | TRENCH EXCAVATION OF EARTH | 204.20 | |
| 10 | | | | | 12 | | | | 22 | | CY | TRENCH EXCAVATION OF ROCK | 204.21 | |
| 1 | | | | | | | | | 1 | | CY | TRENCH EXCAVATION OF EARTH, EXPLORATORY (N.A.B.I.) | 204.22 | |
| | | | | | | 731.2 | | | 731.2 | | CY | STRUCTURE EXCAVATION (ABUTMENT #4) | 204.25 | |
| | | | 1517.7 | | | 433.6 | | | 1951.3 | | CY | STRUCTURE EXCAVATION (ABUTMENTS #1- #3) | 204.25 | |
| | | | 1305.4 | | 15 | 1058.7 | | | 2379.1 | | CY | GRANULAR BACKFILL FOR STRUCTURES | 204.30 | |
| 1000 | | | | | 800 | | 8260 | | 10060 | | SY | COLD PLANING, BITUMINOUS PAVEMENT | 210.10 | |
| 190 | | | | | 700 | | | | 890 | | LF | MILLED RUMBLE STRIPS | 213.10 | |
| 960 | | | | | 1050 | | 230 | | 2240 | | CY | SUBBASE OF DENSE GRADED CRUSHED STONE | 301.35 | |
| 50 | | | | | 85 | | | | 135 | | CY | AGGREGATE SHOULDERS, IN PLACE | 402.10 | |
| 16 | | | | | 13 | | 60 | | 89 | | CWT | EMULSIFIED ASPHALT | 404.65 | |
| | | | | | | | | 1 | 1 | | LU | PRICE ADJUSTMENT, ASPHALT CEMENT (N.A.B.I.) | 406.50 | |
| 820 | | | | | 670 | | 1000 | | 2490 | | TON | SUPERPAVE BITUMINOUS CONCRETE PAVEMENT | 490.30 | |
| | | | | | | | | 1 | 1 | | LU | AIR VOIDS PAY ADJUSTMENT (N.A.B.I.) | 490.31 | |
| | | | | | | | | 1 | 1 | | LU | MAT DENSITY PAY ADJUSTMENT (N.A.B.I.) | 490.32 | |
| | | | 193 | | | 177 | | | 370 | | CY | CONCRETE, HIGH PERFORMANCE CLASS A | 501.33 | |
| | | | 800 | | | 695 | | | 1495 | | CY | CONCRETE, HIGH PERFORMANCE CLASS B | 501.34 | |
| | | | | | | 34682 | | | 34682 | | LB | STRUCTURAL STEEL, ROLLED BEAM (W30x90 DIAPHRAGM) | 506.50 | |
| | | | 45832 | | | | | | 45832 | | LB | STRUCTURAL STEEL, ROLLED BEAM (W40 x 149 DIAPHRAGM) | 506.50 | |
| | | | 229060 | | | 139240 | | | 368300 | | LB | STRUCTURAL STEEL, PLATE GIRDER | 506.55 | |
| | | | 73436 | | | 60744 | | | 134180 | | LB | REINFORCING STEEL, LEVEL I | 507.11 | |
| | | | 63317 | | | 60310 | | | 123627 | | LB | REINFORCING STEEL, LEVEL III | 507.13 | |
| | | | | | | 144 | | | 144 | | LF | DRILLING AND GROUTING DOWELS | 507.16 | |
| | | | 100 | | | 100 | | | 200 | | EACH | MECHANICAL BAR CONNECTOR | 507.19 | |
| | | | 1 | | | | | | 1 | | LS | SHEAR CONNECTORS (2634 EA. - 7/8" X 7")(BRIDGE 43S) | 508.15 | |
| | | | | | | 1 | | | 1 | | LS | SHEAR CONNECTORS (3072 EA. - 7/8" X 7")(BRIDGE 43N) | 508.15 | |
| | | | 686 | | | 656 | | | 1342 | | SY | LONGITUDINAL DECK GROOVING | 509.10 | |
| | | | 96 | | | 99 | | | 195 | | GAL | WATER REPELLENT, SILANE | 514.10 | |
| | | | 100 | | | 95 | | | 195 | | LF | BRIDGE EXPANSION JOINT, ASPHALTIC PLUG | 516.10 | |
| | | | 100 | | | 95 | | | 195 | | LF | JOINT SEALER, HOT POURED | 524.11 | |
| | | | 277 | | | 277 | | | 554 | | LF | BRIDGE RAILING, CONCRETE F-SHAPE | 525.70 | |
| | | | | | | 1 | | | 1 | | EACH | PARTIAL REMOVAL OF STRUCTURE (SUBSTRUCTURE 43N) | 529.20 | |
| | | | 1 | | | | | | 1 | | EACH | PARTIAL REMOVAL OF STRUCTURE (SUBSTRUCTURE 43S) | 529.20 | |
| | | | | | | 1 | | | 1 | | EACH | PARTIAL REMOVAL OF STRUCTURE (SUPERSTRUCTURE 43N) | 529.20 | |

## DETAILED SUMMARY OF QUANTITIES

| QUANTITIES | UNIT | ITEMS |
|---|---|---|
| | | **TRAFFIC CONTROL (I-91 NORTHBOUND)** |
| 288 | SF | TRAFFIC SIGNS, TYPE A |
| 540 | LF | SQUARE TUBE SIGN POST AND ANCHOR |
| 1700 | LF | TEMPORARY 6 INCH WHITE LINE |
| 1350 | LF | TEMPORARY 6 INCH YELLOW LINE |
| 2700 | LF | PAVEMENT MARKING MASK |
| 110 | TON | TEMPORARY PAVEMENT |
| 250 | CY | COMMON EXCAVATION |
| 225 | CY | SUBBASE OF DENSE GRADED CRUSHED STONE |
| 370 | LF | GRANITE SLOPE EDGING |
| 5 | EA | DELINEATOR WITH STEEL POST |
| 5 | EA | REMOVAL OF EXISTING DELINEATOR |
| | | **TRAFFIC CONTROL (I-91 SOUTHBOUND)** |
| 900 | SF | TRAFFIC SIGNS, TYPE A |
| 1450 | LF | SQUARE TUBE SIGN POST AND ANCHOR |
| | | **TRAFFIC CONTROL (US RT 5)** |
| 260 | SF | TRAFFIC SIGNS, TYPE A |
| 570 | LF | SQUARE TUBE SIGN POST AND ANCHOR |
| 3200 | LF | TEMPORARY 4 INCH WHITE LINE |
| 2625 | LF | TEMPORARY 4 INCH YELLOW LINE |
| 560 | LF | TEMPORARY 8 INCH WHITE LINE |
| 150 | LF | TEMPORARY 24 INCH STOP BAR |
| 26 | EA | TEMPORARY LETTER OR SYMBOL |
| 850 | LF | REMOVAL OF EXISTING PAVEMENT MARKINGS |

PROJECT NAME: HARTFORD
PROJECT NUMBER: IM 091-2(79)

FILE NAME: sl2al32qs.dgn
PROJECT LEADER: K. HIGGINS
DESIGNED BY: W. LAMMER
QUANTITY SHEET 1

PLOT DATE: 15-DEC-2014
DRAWN BY: K. FRIEDLAND
CHECKED BY: J. SALVATORI
SHEET 7 OF 166

STATE OF VERMONT
AGENCY OF TRANSPORTATION

# QUANTITY SHEET 2

| SUMMARY OF ESTIMATED QUANTITIES | | | | | | | | | TOTALS | | DESCRIPTIONS | | | |
|---|---|---|---|---|---|---|---|---|---|---|---|---|---|---|
| ROADWAY 91S | TRAINING | EROSION CONTROL | BRIDGE 43S | FULL C.E. ITEMS | ROADWAY 91N | BRIDGE 43N | ROADWAY RT 5 | ROADWAY COMMON | GRAND TOTAL | FINAL | UNIT | ITEMS | ITEM NUMBER | ROUND |
| | | | 1 | | | | | | 1 | | EACH | PARTIAL REMOVAL OF STRUCTURE (SUPERSTRUCTURE 43S) | 529.20 | |
| | | | 12 | | | 12 | | | 24 | | EACH | BEARING DEVICE ASSEMBLY, ELASTOMERIC PAD W/ EXT. LOAD PLATES | 531.18 | |
| | | | | | | 50 | | | 50 | | CY | CONCRETE, CLASS C | 541.30 | |
| | | | | | | | | | | | | BEGIN OPTION AA | | |
| | | | | | 30 | | | | 30 | | LF | 18" CSP .064 (2-2/3 X 1/2) | 601.0015 | |
| | | | | | 30 | | | | 30 | | LF | 18" CAAP .060 (2-2/3 X 1/2) | 601.0215 | |
| | | | | | 30 | | | | 30 | | LF | 18" PCCSP .079 (2-2/3 X 1/2) | 601.0416 | |
| | | | | | 30 | | | | 30 | | LF | 18" RCP CLASS III | 601.0815 | |
| | | | | | 30 | | | | 30 | | LF | 18" CPEP | 601.0915 | |
| | | | | | 30 | | | | 30 | | LF | 18" CPPP (SL) | 601.2815 | |
| | | | | | | | | | | | | END OPTION AA | | |
| | | | | | 1 | | | | 1 | | EACH | PRECAST REINFORCED CONCRETE DROP INLET WITH CAST IRON GRATE | 604.18 | |
| 1 | | | | | | | 1 | | 2 | | EACH | CHANGING ELEVATION OF DROP INLETS, CATCH BASINS, OR MANHOLES | 604.40 | |
| | | | | | | | 1 | | 1 | | EACH | CAST IRON COVER WITH FRAME | 604.55 | |
| | | 280 | | | | | | | 280 | | MGAL | DUST CONTROL WITH WATER | 609.10 | |
| | | 2 | | | | | | | 2 | | TON | DUST AND ICE CONTROL WITH CALCIUM CHLORIDE | 609.15 | |
| 90 | | | | | 2 | | | | 92 | | CY | STONE FILL, TYPE II | 613.11 | |
| | | | | | | | 648 | | 648 | | LF | GRANITE SLOPE EDGING | 616.20 | |
| | | | | | | | 362 | | 362 | | LF | VERTICAL GRANITE CURB | 616.21 | |
| 58 | | | | | 48 | | | | 106 | | LF | BITUMINOUS CONCRETE CURB, TYPE A | 616.305 | |
| 4 | | | | | 2 | | 5 | | 11 | | EACH | STEEL MARKER POSTS | 619.16 | |
| | | | | | | | 90 | | 90 | | LF | REMOVING AND RESETTING FENCE | 620.50 | |
| 389.5 | | | | | 564.5 | | | | 954 | | LF | STEEL BEAM GUARDRAIL, GALVANIZED | 621.20 | |
| | | | | | 58 | | | | 58 | | LF | STEEL BEAM GUARDRAIL, GALVANIZED W/8 FEET POSTS | 621.205 | |
| | | | | | 1 | | | | 1 | | EACH | MANUFACTURED TERMINAL SECTION, FLARED | 621.50 | |
| 1 | | | | | 5 | | | | 6 | | EACH | ANCHOR FOR STEEL BEAM RAIL | 621.60 | |
| 4 | | | | | 4 | | | | 8 | | EACH | GUARDRAIL APPROACH SECTION TO CONCRETE BRIDGE RAILING, TL-3 | 621.747 | |
| 100 | | | | | 75 | | | | 175 | | LF | REMOVE AND RESET GUARDRAIL | 621.75 | |
| 375 | | | | | 650 | | 300 | | 1325 | | LF | REMOVAL AND DISPOSAL OF GUARDRAIL | 621.80 | |
| | | | | | 1310 | | 1600 | | 2910 | | LF | TEMPORARY TRAFFIC BARRIER | 621.90 | |
| 810 | | | | | | | | | 810 | | LF | REMOVE AND RESET TEMPORARY TRAFFIC BARRIER | 621.95 | |
| 2250 | | | | | 2250 | | | | 4500 | | HR | FLAGGERS | 630.15 | |
| | | | | 1 | | | | | 1 | | LS | FIELD OFFICE, ENGINEERS | 631.10 | |
| | | | | 1 | | | | | 1 | | LS | TESTING EQUIPMENT, CONCRETE | 631.16 | |
| | | | | 1 | | | | | 1 | | LS | TESTING EQUIPMENT, BITUMINOUS | 631.17 | |
| | | | | 5000 | | | | | 5000 | | DL | FIELD OFFICE TELEPHONE (N.A.B.I.) | 631.26 | |
| | 1040 | | | | | | | | 1040 | | HR | EMPLOYEE TRAINEESHIP | 634.10 | |
| | | | | | | | | 1 | 1 | | LS | MOBILIZATION/DEMOBILIZATION | 635.11 | |
| | | | | | 1 | | | | 1 | | LS | TRAFFIC CONTROL (I-91 NORTHBOUND) | 641.10 | |
| 1 | | | | | | | | | 1 | | LS | TRAFFIC CONTROL (I-91 SOUTHBOUND) | 641.10 | |

| DETAILED SUMMARY OF QUANTITIES | | |
|---|---|---|
| QUANTITIES | UNIT | ITEMS |

PROJECT NAME: HARTFORD
PROJECT NUMBER: IM 091-2(79)

FILE NAME: sl2al32qs.dgn
PROJECT LEADER: K. HIGGINS
DESIGNED BY: W. LAMMER
QUANTITY SHEET 2

PLOT DATE: 15-DEC-2014
DRAWN BY: K. FRIEDLAND
CHECKED BY: J. SALVATORI
SHEET 8 OF 166

STATE OF VERMONT
AGENCY OF TRANSPORTATION

# QUANTITY SHEET 3

| SUMMARY OF ESTIMATED QUANTITIES | | | | | | | | | TOTALS | | DESCRIPTIONS | | | | DETAILED SUMMARY OF QUANTITIES | | |
|---|---|---|---|---|---|---|---|---|---|---|---|---|---|---|---|---|---|
| ROADWAY 91S | TRAINING | EROSION CONTROL | BRIDGE 43S | FULL C.E. ITEMS | ROADWAY 91N | BRIDGE 43N | ROADWAY RT 5 | ROADWAY COMMON | GRAND TOTAL | FINAL | UNIT | ITEMS | ITEM NUMBER | ROUND | QUANTITIES | UNIT | ITEMS |
| | | | | | | | 1 | | 1 | | LS | TRAFFIC CONTROL (US RT 5) | 641.10 | | | | |
| 2 | | | | | 2 | | 2 | | 6 | | EACH | PORTABLE CHANGEABLE MESSAGE SIGN | 641.15 | | | | |
| | | | | | | | 3750 | | 3750 | | LF | DURABLE 4 INCH WHITE LINE, POLYUREA | 646.404 | | | | |
| | | | | | | | 4040 | | 4040 | | LF | DURABLE 4 INCH YELLOW LINE, POLYUREA | 646.414 | | | | |
| 861 | | | | | 654 | | | | 1515 | | LF | DURABLE 6 INCH WHITE LINE, RECESSED POLYUREA | 646.426 | | | | |
| 550 | | | | | 528 | | | | 1078 | | LF | DURABLE 6 INCH YELLOW LINE, RECESSED POLYUREA | 646.436 | | | | |
| | | | | | | | 835 | | 835 | | LF | DURABLE 8 INCH WHITE LINE, POLYUREA | 646.444 | | | | |
| | | | | | | | 500 | | 500 | | LF | DURABLE 8 INCH YELLOW LINE, POLYUREA | 646.454 | | | | |
| 50 | | | | | | | | | 50 | | LF | DURABLE 12 INCH WHITE LINE, RECESSED POLYUREA | 646.466 | | | | |
| | | | | | | | 60 | | 60 | | LF | DURABLE 24 INCH STOP BAR, POLYUREA | 646.484 | | | | |
| | | | | | | | 49 | | 49 | | EACH | DURABLE LETTER OR SYMBOL, POLYUREA | 646.494 | | | | |
| 825 | | | | | 800 | | | | 1625 | | SY | GEOTEXTILE FOR ROADBED SEPARATOR | 649.11 | | | | |
| 180 | | | | | 3 | | | | 183 | | SY | GEOTEXTILE UNDER STONE FILL | 649.31 | | | | |
| | | 1600 | | | | | | | 1600 | | SY | GEOTEXTILE FOR SILT FENCE | 649.51 | | | | |
| | | 105 | | | | | | | 105 | | LB | SEED | 651.15 | | | | |
| | | 860 | | | | | | | 860 | | LB | FERTILIZER | 651.18 | | | | |
| | | 4 | | | | | | | 4 | | TON | AGRICULTURAL LIMESTONE | 651.20 | | | | |
| | | 4 | | | | | | | 4 | | TON | HAY MULCH | 651.25 | | | | |
| | | 930 | | | | | | | 930 | | CY | TOPSOIL | 651.35 | | | | |
| | | 1 | | | | | | | 1 | | LS | EPSC PLAN | 652.10 | | | | |
| | | 200 | | | | | | | 200 | | HR | MONITORING EPSC PLAN | 652.20 | | | | |
| | | 1 | | | | | | | 1 | | LU | MAINTENANCE OF EPSC PLAN (N.A.B.I.) | 652.30 | | | | |
| | | 1425 | | | | | | | 1425 | | SY | TEMPORARY EROSION MATTING | 653.20 | | | | |
| | | 20 | | | | | | | 20 | | CY | TEMPORARY STONE CHECK DAM, TYPE I | 653.25 | | | | |
| | | 200 | | | | | | | 200 | | CY | VEHICLE TRACKING PAD | 653.35 | | | | |
| | | 11 | | | | | | | 11 | | EACH | INLET PROTECTION DEVICE, TYPE I | 653.40 | | | | |
| | | 3925 | | | | | | | 3925 | | LF | BARRIER FENCE | 653.50 | | | | |
| 4.66 | | | | | 4.66 | | 68.63 | | 77.95 | | SF | TRAFFIC SIGNS, TYPE A | 675.20 | | | | |
| 24 | | | | | 24 | | 135 | | 183 | | LF | SQUARE TUBE SIGN POST AND ANCHOR | 675.341 | | | | |
| 6 | | | | | 3 | | 25 | | 34 | | EACH | REMOVING SIGNS | 675.50 | | | | |
| | | | | | | | 8 | | 8 | | EACH | ERECTING SALVAGED SIGNS | 675.60 | | | | |
| | | | | | 2 | | | | 2 | | EACH | DELINEATOR WITH STEEL POST (BLUE) | 676.10 | | | | |
| 1 | | | | | 1 | | | | 2 | | EACH | DELINEATOR WITH STEEL POST (GREEN) | 676.10 | | | | |
| 2 | | | | | 2 | | | | 4 | | EACH | DELINEATOR WITH STEEL POST (YELLOW) | 676.10 | | | | |
| 2 | | | | | 3 | | 6 | | 11 | | EACH | REMOVAL OF EXISTING DELINEATOR | 676.12 | | | | |
| | | | | | | | 1 | | 1 | | EACH | REMOVE AND RESET OVERHEAD TRAFFIC SIGN SUPPORT | 677.25 | | | | |
| | | | | | | | 2 | | 2 | | EACH | TEMPORARY TRAFFIC SIGNAL SYSTEM | 678.40 | | | | |
| | | | | | | | 1 | | 1 | | EACH | REMOVING AND RESETTING LIGHT POLE | 679.25 | | | | |
| | | | | | | | | 1 | 1 | | LU | PRICE ADJUSTMENT, FUEL (N.A.B.I.) | 690.50 | | | | |
| | | | 2 | | | 2 | | | 4 | | CY | SPECIAL PROVISION (HIGH PERFORMANCE CONCRETE, RAPID SET)(FPQ) | 900.608 | | | | |

PROJECT NAME: HARTFORD
PROJECT NUMBER: IM 091-2(79)

FILE NAME: sl2al32qs.dgn
PROJECT LEADER: K. HIGGINS
DESIGNED BY: W. LAMMER
QUANTITY SHEET 3

PLOT DATE: 15-DEC-2014
DRAWN BY: K. FRIEDLAND
CHECKED BY: J. SALVATORI

STATE OF VERMONT
AGENCY OF TRANSPORTATION

# QUANTITY SHEET 4

| SUMMARY OF ESTIMATED QUANTITIES | | | | | | | | | TOTALS | | DESCRIPTIONS | | | | DETAILED SUMMARY OF QUANTITIES | | |
|---|---|---|---|---|---|---|---|---|---|---|---|---|---|---|---|---|---|
| ROADWAY 91S | TRAINING | EROSION CONTROL | BRIDGE 43S | FULL C.E. ITEMS | ROADWAY 91N | BRIDGE 43N | ROADWAY RT 5 | ROADWAY COMMON | GRAND TOTAL | FINAL | UNIT | ITEMS | ITEM NUMBER | ROUND | QUANTITIES | UNIT | ITEMS |
| | | | | | | 50000 | | | 50000 | | DL | SPECIAL PROVISION (INCENTIVE/DISINCENTIVE)(N.A.B.I.)(BRIDGE 43N) | 900.615 | | | | |
| | | | 50000 | | | | | | 50000 | | DL | SPECIAL PROVISION (INCENTIVE/DISINCENTIVE)(N.A.B.I.)(BRIDGE 43S) | 900.615 | | | | |
| | | | | | | | 8625 | | 8625 | | DL | SPECIAL PROVISION (PEDESTRIAN SHUTTLE)(N.A.B.I) | 900.615 | | | | |
| 110000 | | | | | 110000 | | | | 220000 | | DL | SPECIAL PROVISION (UNIFORMED TRAFFIC OFFICERS) | 900.615 | | | | |
| | | | | 8 | | | | | 8 | | EACH | SPECIAL PROVISION (CPM SCHEDULE) | 900.620 | | | | |
| | | | | | | | 1 | | 1 | | EACH | SPECIAL PROVISION (GPS TIME CLOCK) | 900.620 | | | | |
| | | | 1 | | | 1 | | | 2 | | EACH | SPECIAL PROVISION (TEMPORARY SUPPORTS AND HORIZONTAL SLIDE) | 900.620 | | | | |
| 5 | | | | | 5 | | | | 10 | | HR | SPECIAL PROVISION (JET DRYER) | 900.630 | | | | |
| | | | 20 | | | 20 | | | 40 | | HR | SPECIAL PROVISION (UNEXPECTED OBSTRUCTION DRILLING) | 900.630 | | | | |
| | | | | | | 88470 | | | 88470 | | LB | SPECIAL PROVISION (STRUCTURAL STEEL, PLATE GIRDER, GRADE HPS 70W) | 900.635 | | | | |
| | | | 960 | | | 450 | | | 1410 | | LF | SPECIAL PROVISION (MICROPILE, CASED)(9.625") | 900.640 | | | | |
| | | | 235 | | | 95 | | | 330 | | LF | SPECIAL PROVISION (MICROPILE, UNCASED)(8.535") | 900.640 | | | | |
| | | | 1 | | | | | | 1 | | LS | SPECIAL PROVISION (CONTRACTOR-FABRICATED PRECAST CONCRETE STRUCTURE)(APPROACH SLAB #1) | 900.645 | | | | |
| | | | 1 | | | | | | 1 | | LS | SPECIAL PROVISION (CONTRACTOR-FABRICATED PRECAST CONCRETE STRUCTURE)(APPROACH SLAB #2) | 900.645 | | | | |
| | | | | | | 1 | | | 1 | | LS | SPECIAL PROVISION (CONTRACTOR-FABRICATED PRECAST CONCRETE STRUCTURE)(APPROACH SLAB #3) | 900.645 | | | | |
| | | | | | | 1 | | | 1 | | LS | SPECIAL PROVISION (CONTRACTOR-FABRICATED PRECAST CONCRETE STRUCTURE)(APPROACH SLAB #4) | 900.645 | | | | |
| | | | | | | 1 | | | 1 | | LS | SPECIAL PROVISION (CPM SCHEDULE)(BRIDGE 43N) | 900.645 | | | | |
| | | | 1 | | | | | | 1 | | LS | SPECIAL PROVISION (CPM SCHEDULE)(BRIDGE 43S) | 900.645 | | | | |
| | | | 1 | | | | | | 1 | | LS | SPECIAL PROVISION (FURNISHING EQUIPMENT FOR INSTALLING MICROPILES) | 900.645 | | | | |
| | | | 1 | | | | | | 1 | | LS | SPECIAL PROVISION (PUBLIC PROTECTION FOR BRIDGE PROJECTS) | 900.645 | | | | |
| | | | | | | | 1 | | 1 | | LS | SPECIAL PROVISION (SMART WORK ZONE) | 900.645 | | | | |
| | | | 4402 | | | 4260 | | | 8662 | | SF | SPECIAL PROVISION (PRECAST PRESTRESSED CONCRETE DECK PANEL)(3 1/2") | 900.670 | | | | |

PROJECT NAME: HARTFORD
PROJECT NUMBER: IM 091-2(79)

FILE NAME: sl2al32qs.dgn
PROJECT LEADER: K. HIGGINS
DESIGNED BY: W. LAMMER
QUANTITY SHEET 4

PLOT DATE: 15-DEC-2014
DRAWN BY: K. FRIEDLAND
CHECKED BY: J. SALVATORI
SHEET 10 OF 166

STATE OF VERMONT
AGENCY OF TRANSPORTATION

# BRIDGE QUANTITY SHEET 1

| SUMMARY OF BRIDGE QUANTITIES | | | | | | | | | TOTALS | DESCRIPTIONS | | | DETAILED SUMMARY OF QUANTITIES | | |
|---|---|---|---|---|---|---|---|---|---|---|---|---|---|---|---|
| | | | | | DECK | APP SLAB 3 | APP SLAB 4 | ABUT 3 | ABUT 4 | BRIDGE TOTAL | UNIT | ITEMS | ITEM NUMBER | QUANTITIES | UNIT | ITEMS |
| | | | | | | | | | 731.2 | 731.2 | CY | STRUCTURE EXCAVATION (ABUTMENT #4) | 204.25 | | | |
| | | | | | | | | 433.6 | | 433.6 | CY | STRUCTURE EXCAVATION (ABUTMENTS #1- #3) | 204.25 | | | |
| | | | | 1058.7 | | | | | | 1058.7 | CY | GRANULAR BACKFILL FOR STRUCTURES | 204.30 | | | |
| | | | | | 177 | | | | | 177 | CY | CONCRETE, HIGH PERFORMANCE CLASS A | 501.33 | | | |
| | | | | 695 | | | | | | 695 | CY | CONCRETE, HIGH PERFORMANCE CLASS B | 501.34 | | | |
| | | | | | 34682 | | | | | 34682 | LB | STRUCTURAL STEEL, ROLLED BEAM (W30x90 DIAPHRAGM) | 506.50 | | | |
| | | | | | 139240 | | | | | 139240 | LB | STRUCTURAL STEEL, PLATE GIRDER | 506.55 | | | |
| | | | | 60744 | | | | | | 60744 | LB | REINFORCING STEEL, LEVEL I | 507.11 | | | |
| | | | | 60310 | | | | | | 60310 | LB | REINFORCING STEEL, LEVEL III | 507.13 | | | |
| | | | | | | | | | 144 | 144 | LF | DRILLING AND GROUTING DOWELS | 507.16 | | | |
| | | | | | | | | 50 | 50 | 100 | EACH | MECHANICAL BAR CONNECTOR | 507.19 | | | |
| | | | | | 1 | | | | | 1 | LS | SHEAR CONNECTORS (3072 EA. - 7/8" X 7")(BRIDGE 43N) | 508.15 | | | |
| | | | | | 656 | | | | | 656 | SY | LONGITUDINAL DECK GROOVING | 509.10 | | | |
| | | | | 99 | | | | | | 99 | GAL | WATER REPELLENT, SILANE | 514.10 | | | |
| | | | | | 95 | | | | | 95 | LF | BRIDGE EXPANSION JOINT, ASPHALTIC PLUG | 516.10 | | | |
| | | | | | 95 | | | | | 95 | LF | JOINT SEALER, HOT POURED | 524.11 | | | |
| | | | | | 277 | | | | | 277 | LF | BRIDGE RAILING, CONCRETE F-SHAPE | 525.70 | | | |
| | | | | | | | | 0.5 | 0.5 | 1 | EACH | PARTIAL REMOVAL OF STRUCTURE (SUBSTRUCTURE 43N) | 529.20 | | | |
| | | | | | 1 | | | | | 1 | EACH | PARTIAL REMOVAL OF STRUCTURE (SUPERSTRUCTURE 43N) | 529.20 | | | |
| | | | | | | | | 6 | 6 | 12 | EACH | BEARING DEVICE ASSEMBLY, ELASTOMERIC PAD W/ EXT. LOAD PLATES | 531.18 | | | |
| | | | | | | | | | 50 | 50 | CY | CONCRETE, CLASS C | 541.30 | | | |
| | | | | | | 1 | 1 | | | 2 | CY | SPECIAL PROVISION (HIGH PERFORMANCE CONCRETE, RAPID SET)(FPQ) | 900.608 | | | |
| | | | | | 50000 | | | | | 50000 | DL | SPECIAL PROVISION (INCENTIVE/DISINCENTIVE)(N.A.B.I.)(BRIDGE 43N) | 900.615 | | | |
| | | | | 1 | | | | | | 1 | EACH | SPECIAL PROVISION (TEMPORARY SUPPORTS AND HORIZONTAL SLIDE) | 900.620 | | | |
| | | | | | | | | 20 | | 20 | HR | SPECIAL PROVISION (UNEXPECTED OBSTRUCTION DRILLING) | 900.630 | | | |
| | | | | | 88470 | | | | | 88470 | LB | SPECIAL PROVISION (STRUCTURAL STEEL, PLATE GIRDER, GRADE HPS 70W) | 900.635 | | | |
| | | | | | | | | 450 | | 450 | LF | SPECIAL PROVISION (MICROPILE, CASED)(9.625") | 900.640 | | | |
| | | | | | | | | 95 | | 95 | LF | SPECIAL PROVISION (MICROPILE, UNCASED)(8.535") | 900.640 | | | |
| | | | | | | 1 | | | | 1 | LS | SPECIAL PROVISION (CONTRACTOR-FABRICATED PRECAST CONCRETE STRUCTURE)(APPROACH SLAB #3) | 900.645 | | | |
| | | | | | | | 1 | | | 1 | LS | SPECIAL PROVISION (CONTRACTOR-FABRICATED PRECAST CONCRETE STRUCTURE)(APPROACH SLAB #4) | 900.645 | | | |
| | | | | | 1 | | | | | 1 | LS | SPECIAL PROVISION (CPM SCHEDULE)(BRIDGE 43N) | 900.645 | | | |
| | | | | | 4260 | | | | | 4260 | SF | SPECIAL PROVISION (PRECAST PRESTRESSED CONCRETE DECK PANEL)(3 1/2") | 900.670 | | | |

PROJECT NAME: HARTFORD
PROJECT NUMBER: IM 091-2(79)

FILE NAME: sl2al32qs.dgn
PROJECT LEADER: K. HIGGINS
DESIGNED BY: W. LAMMER
BRIDGE QUANTITY SHEET 43N

PLOT DATE: 15-DEC-2014
DRAWN BY: K. FRIEDLAND
CHECKED BY: J. SALVATORI
SHEET 11 OF 166

STATE OF VERMONT
AGENCY OF TRANSPORTATION

# BRIDGE QUANTITY SHEET 2

| SUMMARY OF BRIDGE QUANTITIES | | | | | | | | | | TOTALS | DESCRIPTIONS | | | DETAILED SUMMARY OF QUANTITIES | | |
|---|---|---|---|---|---|---|---|---|---|---|---|---|---|---|---|---|
| | | | | | DECK | APP SLAB 1 | APP SLAB 2 | ABUT 1 | ABUT 2 | BRIDGE TOTAL | UNIT | ITEMS | ITEM NUMBER | QUANTITIES | UNIT | ITEMS |
| | | | | 1517.7 | | | | | | 1517.7 | CY | STRUCTURE EXCAVATION (ABUTMENTS #1- #3) | 204.25 | | | |
| | | | | 1305.4 | | | | | | 1305.4 | CY | GRANULAR BACKFILL FOR STRUCTURES | 204.30 | | | |
| | | | | | 193 | | | | | 193 | CY | CONCRETE, HIGH PERFORMANCE CLASS A | 501.33 | | | |
| | | | | 800 | | | | | | 800 | CY | CONCRETE, HIGH PERFORMANCE CLASS B | 501.34 | | | |
| | | | | | 45832 | | | | | 45832 | LB | STRUCTURAL STEEL, ROLLED BEAM (W40 x 149 DIAPHRAGM) | 506.50 | | | |
| | | | | | 229060 | | | | | 229060 | LB | STRUCTURAL STEEL, PLATE GIRDER | 506.55 | | | |
| | | | | 73436 | | | | | | 73436 | LB | REINFORCING STEEL, LEVEL I | 507.11 | | | |
| | | | | 63317 | | | | | | 63317 | LB | REINFORCING STEEL, LEVEL III | 507.13 | | | |
| | | | | | | | | 50 | 50 | 100 | EACH | MECHANICAL BAR CONNECTOR | 507.19 | | | |
| | | | | | 1 | | | | | 1 | LS | SHEAR CONNECTORS (2634 EA. - 7/8" X 7")(BRIDGE 43S) | 508.15 | | | |
| | | | | | 686 | | | | | 686 | SY | LONGITUDINAL DECK GROOVING | 509.10 | | | |
| | | | | 96 | | | | | | 96 | GAL | WATER REPELLENT, SILANE | 514.10 | | | |
| | | | | | 100 | | | | | 100 | LF | BRIDGE EXPANSION JOINT, ASPHALTIC PLUG | 516.10 | | | |
| | | | | | 100 | | | | | 100 | LF | JOINT SEALER, HOT POURED | 524.11 | | | |
| | | | | | 277 | | | | | 277 | LF | BRIDGE RAILING, CONCRETE F-SHAPE | 525.70 | | | |
| | | | | | | | | 0.5 | 0.5 | 1 | EACH | PARTIAL REMOVAL OF STRUCTURE (SUBSTRUCTURE 43S) | 529.20 | | | |
| | | | | | 1 | | | | | 1 | EACH | PARTIAL REMOVAL OF STRUCTURE (SUPERSTRUCTURE 43S) | 529.20 | | | |
| | | | | | | | | 6 | 6 | 12 | EACH | BEARING DEVICE ASSEMBLY, ELASTOMERIC PAD W/ EXT. LOAD PLATES | 531.18 | | | |
| | | | | | | 1 | 1 | | | 2 | CY | SPECIAL PROVISION (HIGH PERFORMANCE CONCRETE, RAPID SET)(FPQ) | 900.608 | | | |
| | | | | | 50000 | | | | | 50000 | DL | SPECIAL PROVISION (INCENTIVE/DISINCENTIVE)(N.A.B.I.)(BRIDGE 43S) | 900.615 | | | |
| | | | | | 1 | | | | | 1 | EACH | SPECIAL PROVISION (TEMPORARY SUPPORTS AND HORIZONTAL SLIDE) | 900.620 | | | |
| | | | | | | | | 10 | 10 | 20 | HR | SPECIAL PROVISION (UNEXPECTED OBSTRUCTION DRILLING) | 900.630 | | | |
| | | | | 960 | | | | | | 960 | LF | SPECIAL PROVISION (MICROPILE, CASED)(9.625") | 900.640 | | | |
| | | | | 235 | | | | | | 235 | LF | SPECIAL PROVISION (MICROPILE, UNCASED)(8.535") | 900.640 | | | |
| | | | | | | 1 | | | | 1 | LS | SPECIAL PROVISION (CONTRACTOR-FABRICATED PRECAST CONCRETE STRUCTURE)(APPROACH SLAB #1) | 900.645 | | | |
| | | | | | | | 1 | | | 1 | LS | SPECIAL PROVISION (CONTRACTOR-FABRICATED PRECAST CONCRETE STRUCTURE)(APPROACH SLAB #2) | 900.645 | | | |
| | | | | | 1 | | | | | 1 | LS | SPECIAL PROVISION (CPM SCHEDULE)(BRIDGE 43S) | 900.645 | | | |
| | | | | | | | | 1 | | 1 | LS | SPECIAL PROVISION (FURNISHING EQUIPMENT FOR INSTALLING MICROPILES) | 900.645 | | | |
| | | | | | 1 | | | | | 1 | LS | SPECIAL PROVISION (PUBLIC PROTECTION FOR BRIDGE PROJECTS) | 900.645 | | | |
| | | | | | 4402 | | | | | 4402 | SF | SPECIAL PROVISION (PRECAST PRESTRESSED CONCRETE DECK PANEL)(3 1/2") | 900.670 | | | |

PROJECT NAME: HARTFORD
PROJECT NUMBER: IM 091-2(79)

FILE NAME: sl2al32qs.dgn
PROJECT LEADER: K. HIGGINS
DESIGNED BY: W. LAMMER
BRIDGE QUANTITY SHEET 43S

PLOT DATE: 15-DEC-2014
DRAWN BY: K. FRIEDLAND
CHECKED BY: J. SALVATORI
SHEET 12 OF 166

* 1½" SUPERPAVE BITUMINOUS CONCRETE PAVEMENT, TYPE IVS OVER
½" SUPERPAVE BITUMINOUS CONCRETE PAVEMENT, TYPE IV SHIM

** 1½" SUPERPAVE BITUMINOUS CONCRETE PAVEMENT, TYPE IVS OVER
½" SUPERPAVE BITUMINOUS CONCRETE PAVEMENT SHIM, TYPE IVS OVER
2½" SUPERPAVE BITUMINOUS CONCRETE PAVEMENT, TYPE IIS OVER
2½" SUPERPAVE BITUMINOUS CONCRETE PAVEMENT, TYPE IIS

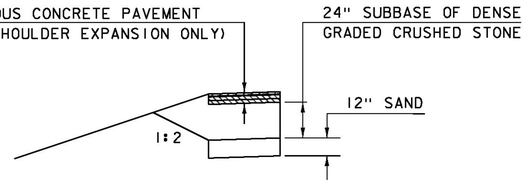


## US ROUTE 5 SHOULDER EXPANSION

SCALE: ¼" = 1'-0"




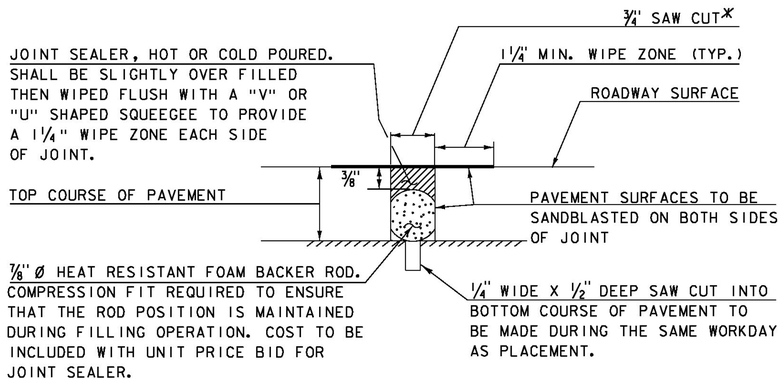


## SAWED PAVEMENT JOINT DETAIL

(NOT TO SCALE)

*JOINT IS TO BE LOCATED ACCURATELY BY STRING LINING, OR OTHER MEANS, PRIOR TO PAVING, SO THAT THE SAW CUTS WILL BE MADE DIRECTLY OVER THE END OF CONCRETE DECK. JOINT SHALL BE CUT DRY IN A SINGLE PASS AND BE SEALED WITHIN 24 HOURS OR PRIOR TO EXPOSURE TO TRAFFIC. JOINT SHALL BE CLEANED PRIOR TO APPLYING THE JOINT SEALER.

## US ROUTE 5 PROPOSED TYPICAL SECTION

SCALE: ¼" = 1'-0"

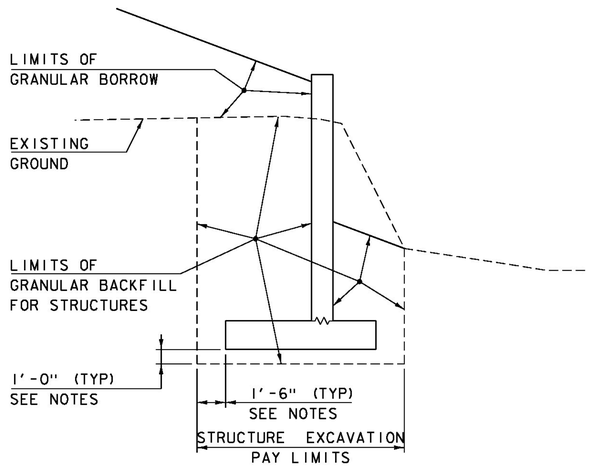


## TYPICAL EARTHWORK SECTION FOR RETAINING WALL

NOT TO SCALE

| | |
|---|---|
| PROJECT NAME: | HARTFORD |
| PROJECT NUMBER: | IM 091-2(79) |
| FILE NAME: sl2al32typical.dgn | PLOT DATE: 15-DEC-2014 |
| PROJECT LEADER: K. HIGGINS | DRAWN BY: K. FRIEDLAND |
| DESIGNED BY: W. LAMMER | CHECKED BY: J. SALVATORI |
| TYPICAL SECTIONS 1 | SHEET 13 OF 166 |

* 1½" SUPERPAVE BITUMINOUS CONCRETE PAVEMENT, TYPE IVS OVER
1½" SUPERPAVE BITUMINOUS CONCRETE PAVEMENT, TYPE IVS OVER
3¼" SUPERPAVE BITUMINOUS CONCRETE PAVEMENT, TYPE IIS OVER
3¼" SUPERPAVE BITUMINOUS CONCRETE PAVEMENT, TYPE IIS

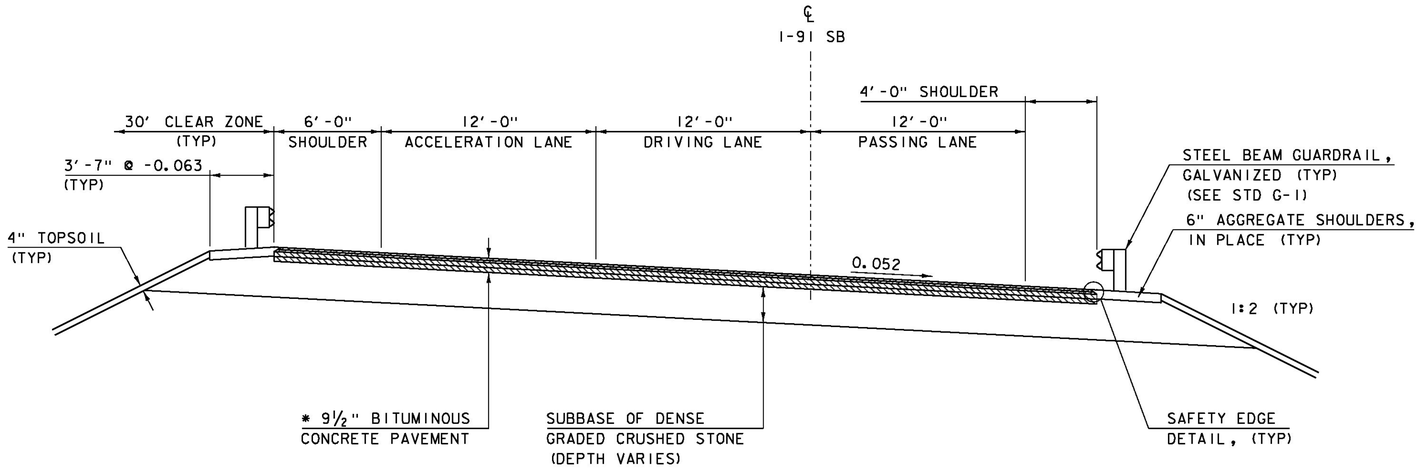


## I-91 SOUTHBOUND TYPICAL SECTION

SCALE: ¼" = 1'-0"

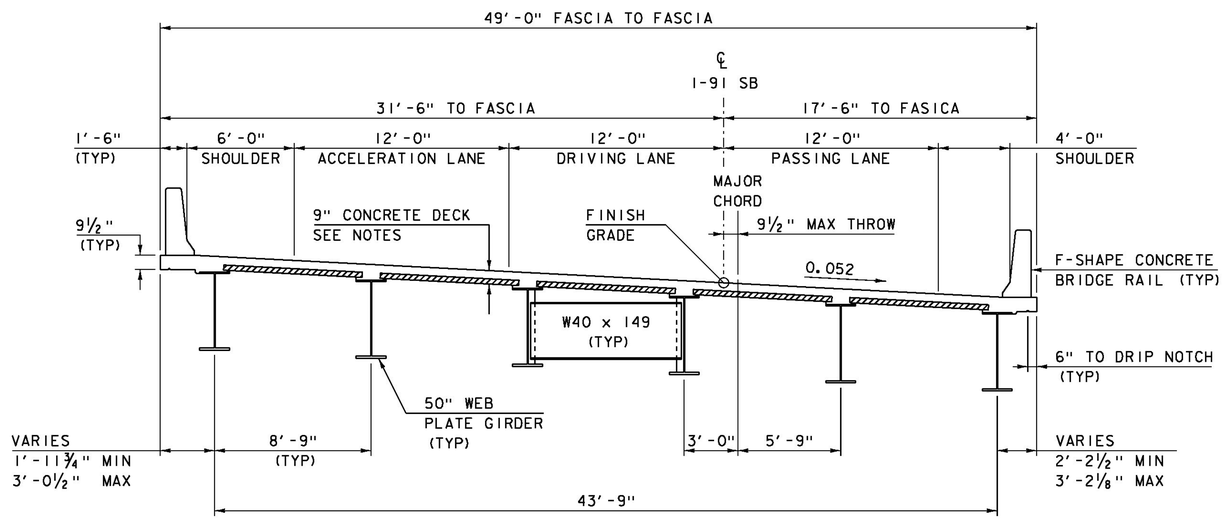


## BRIDGE 43S TYPICAL SECTION

SCALE: ¼" = 1'-0"

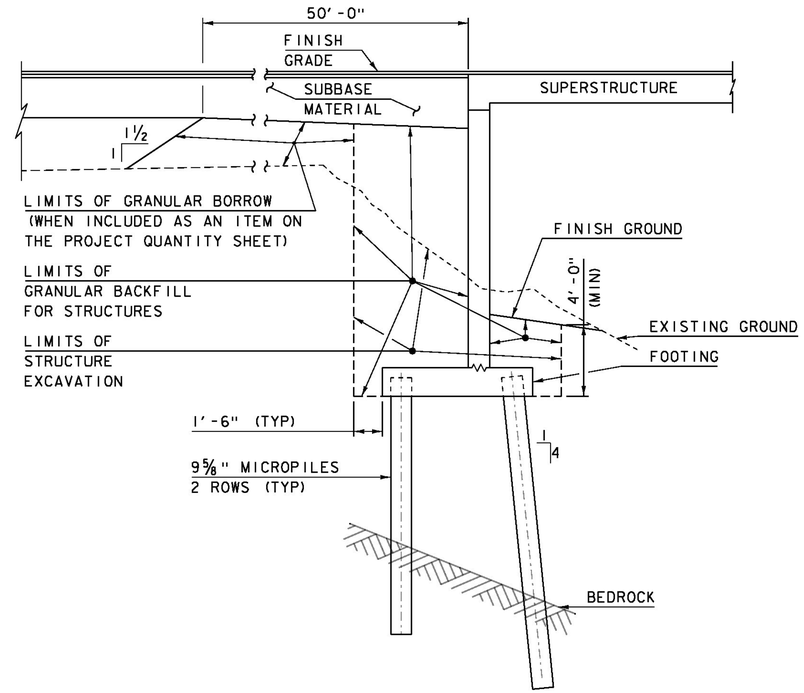


## TYPICAL EARTHWORK SECTION FOR ABUTMENT ON MICROPILES

NOT TO SCALE

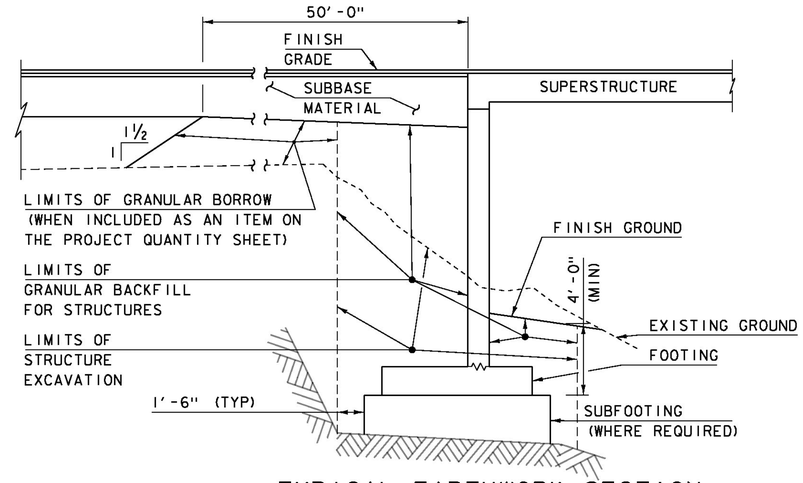


## TYPICAL EARTHWORK SECTION FOR ABUTMENT ON SPREAD FOOTING

NOT TO SCALE

NOTES:

1) 9" DECK (3½" SPECIAL PROVISION "PRECAST PRESTRESSED CONCRETE DECK PANEL" AND 5½" HPC, CLASS A)

| | |
|---|---|
| PROJECT NAME: HARTFORD | |
| PROJECT NUMBER: IM 091-2(79) | |
| FILE NAME: sl2al32typical.dgn | PLOT DATE: 15-DEC-2014 |
| PROJECT LEADER: K. HIGGINS | DRAWN BY: K. FRIEDLAND |
| DESIGNED BY: W. LAMMER | CHECKED BY: J. SALVATORI |
| TYPICAL SECTIONS 2 | SHEET 14 OF 166 |

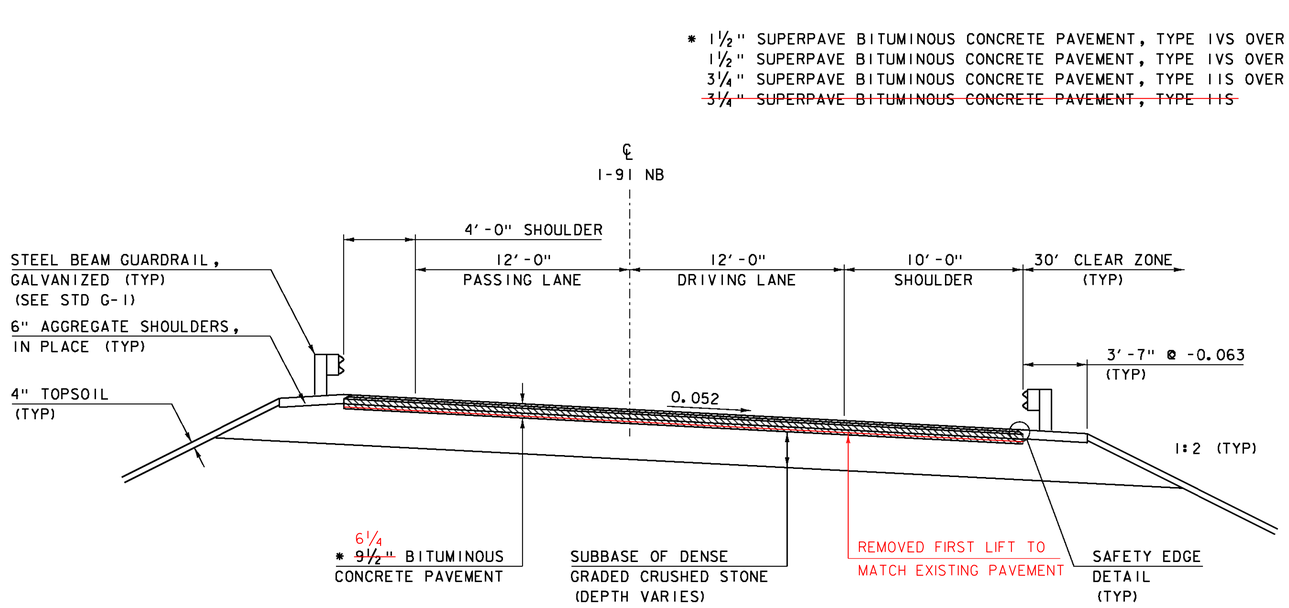


## I-91 NORTHBOUND TYPICAL SECTION

SCALE: ¼" = 1'-0"

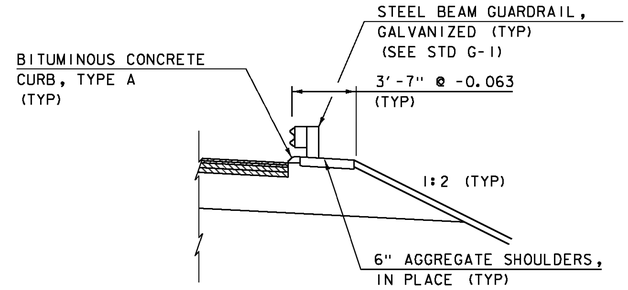


## I-91 TYPICAL CURB SECTION

SCALE: ¼" = 1'-0"

### MATERIAL TOLERANCES
(IF USED ON PROJECT)

| | |
|---|---|
| SURFACE | |
| - PAVEMENT (TOTAL THICKNESS) | +/- ¼" |
| - AGGREGATE SURFACE COURSE | +/- ½" |
| SUBBASE | +/- 1" |
| SAND BORROW | +/- 1" |

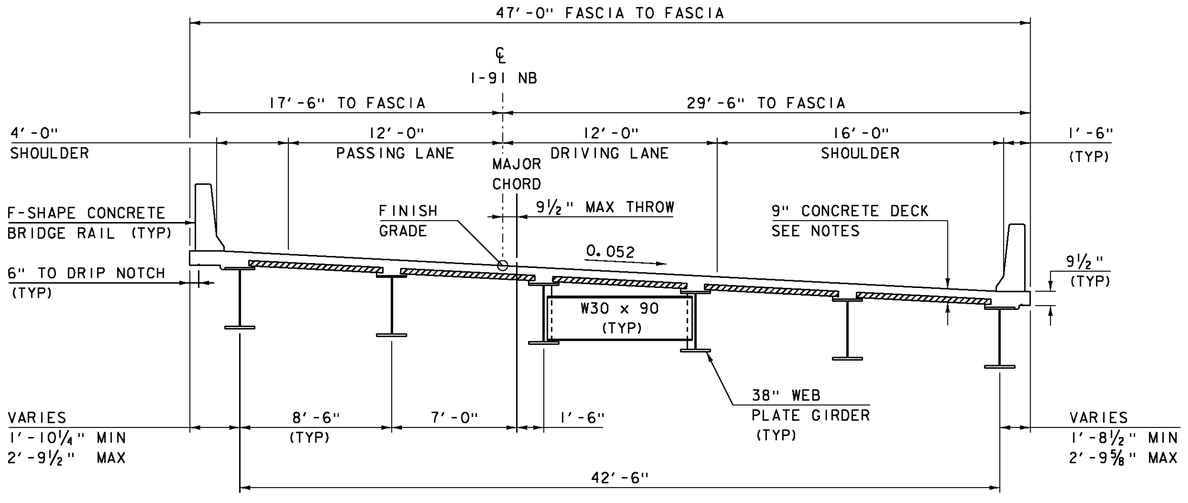


## BRIDGE 43N TYPICAL SECTION

SCALE: ¼" = 1'-0"

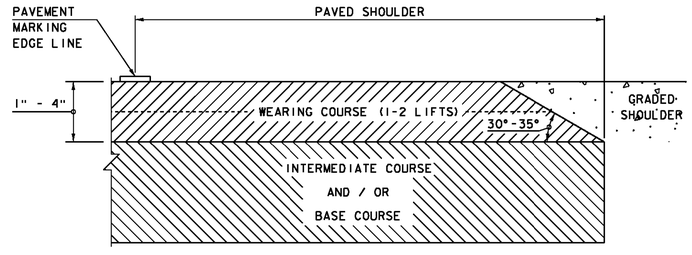


## SAFETY EDGE DETAIL

NOT TO SCALE

NOTES:
1. LEVELING COURSE MAY INCLUDE THE "SAFETY EDGE" AT THE CONTRACTOR'S CHOICE.
2. THE EDGE OF PAVEMENT SHALL BE FORMED IN SUCH A WAY THAT THE BITUMINOUS CONCRETE PAVEMENT IS EXTRUDED OR COMPRESSED TO FORM THE 30 TO 35 DEGREE ANGLE. DEVICES THAT SIMPLY STRIKE-OFF THE MIX WITHOUT PROVIDING ANY COMPACTIVE EFFORT WILL NOT BE ALLOWED.

NOTES:

1) 9" DECK (3½" SPECIAL PROVISION "PRECAST PRESTRESSED CONCRETE DECK PANEL" AND 5½" HPC, CLASS A)

PROJECT NAME: HARTFORD
PROJECT NUMBER: IM 091-2(79)

FILE NAME: sl2al32typical.dgn
PROJECT LEADER: K. HIGGINS
DESIGNED BY: W. LAMMER
TYPICAL SECTIONS 3

PLOT DATE: 15-DEC-2014
DRAWN BY: K. FRIEDLAND
CHECKED BY: J. SALVATORI
SHEET 15 OF 166

## GENERAL INFORMATION

### SYMBOLOGY LEGEND NOTE

THE SYMBOLOGY ON THIS SHEET IS INTENDED TO COVER STANDARD CONVENTIONAL SYMBOLOGY. THE SYMBOLOGY IS USED FOR EXISTING & PROPOSED FEATURES WITH HEAVIER LINEWEIGHT, IN COMBINATION WITH PROJECT ANNOTATION, AS NOTED ON PROJECT PLAN SHEETS. THIS LEGEND SHEET COVERS THE BASICS. SYMBOLOGY ON PLANS MAY VARY, PLAN ANNOTATIONS AND NOTES SHOULD BE USED TO CLARIFY AS NEEDED.

## R.O.W. ABBREVIATIONS (CODES) & SYMBOLS

| POINT | CODE | DESCRIPTION |
|---|---|---|
| | CH | CHANNEL EASEMENT |
| | CONST | CONSTRUCTION EASEMENT |
| | CUL | CULVERT EASEMENT |
| | D&C | DISCONNECT & CONNECT |
| | DIT | DITCH EASEMENT |
| | DR | DRAINAGE EASEMENT |
| | DRIVE | DRIVEWAY EASEMENT |
| | EC | EROSION CONTROL |
| | HWY | HIGHWAY EASEMENT |
| | I&M | INSTALL & MAINTAIN EASEMENT |
| | LAND | LANDSCAPE EASEMENT |
| | R&RES | REMOVE & RESET |
| | R&REP | REMOVE & REPLACE |
| | SR | SLOPE RIGHT |
| | UE | UTILITY EASEMENT |
| | (P) | PERMANENT EASEMENT |
| | (T) | TEMPORARY EASEMENT |
| ■ | BNDNS | BOUND SET |
| ⊡ | BNDNS | BOUND TO BE SET |
| ● | IPNS | IRON PIN SET |
| ◎ | IPNS | IRON PIN TO BE SET |
| ⊠ | CALC | EXISTING ROW POINT |
| ○ | PROW | PROPOSED ROW POINT |
| [LENGTH] | | LENGTH CARRIED ON NEXT SHEET |

## COMMON TOPOGRAPHIC POINT SYMBOLS

| POINT | CODE | DESCRIPTION |
|---|---|---|
| | APL | BOUND APPARENT LOCATION |
| | BM | BENCHMARK |
| | BND | BOUND |
| | CB | CATCH BASIN |
| | COMB | COMBINATION POLE |
| | DITHR | DROP INLET THROATED DNC |
| | EL | ELECTRIC POWER POLE |
| | FPOLE | FLAGPOLE |
| | GASFIL | GAS FILLER |
| | GP | GUIDE POST |
| | GSO | GAS SHUT OFF |
| | GUY | GUY POLE |
| | GUYW | GUY WIRE |
| | GV | GATE VALUE |
| | H | TREE HARDWOOD |
| | HCTRL | CONTROL HORIZONTAL |
| | HVCTRL | CONTROL HORIZ. & VERTICAL |
| | HYD | HYDRANT |
| | IP | IRON PIN |
| | IPIPE | IRON PIPE |
| | LI | LIGHT - STREET OR YARD |
| | MB | MAILBOX |
| | MH | MANHOLE (MH) |
| | MM | MILE MARKER |
| | PM | PARKING METER |
| | PMK | PROJECT MARKER |
| | POST | POST STONE/WOOD |
| | RRSIG | RAILROAD SIGNAL |
| | RRSL | RAILROAD SWITCH LEVER |
| | S | TREE SOFTWOOD |
| | SAT | SATELLITE DISH |
| | SHRUB | SHRUB |
| | SIGN | SIGN |
| | STUMP | STUMP |
| | TEL | TELEPHONE POLE |
| | TIE | TIE |
| | TSIGN | SIGN W/DOUBLE POST |
| | VCTRL | CONTROL VERTICAL |
| | WELL | WELL |
| | WSO | WATER SHUT OFF |

THESE ARE COMMON VAOT SURVEY POINT SYMBOLS FOR EXISTING FEATURES, ALSO USED FOR PROPOSED FEATURES WITH HEAVIER LINEWEIGHT, IN COMBINATION WITH PROPOSED ANNOTATION.

## PROPOSED GEOMETRY CODES

| CODE | DESCRIPTION |
|---|---|
| PC | POINT OF CURVATURE |
| PI | POINT OF INTERSECTION |
| CC | CENTER OF CURVE |
| PT | POINT OF TANGENCY |
| PCC | POINT OF COMPOUND CURVE |
| PRC | POINT OF REVERSE CURVE |
| POB | POINT OF BEGINNING |
| POE | POINT OF ENDING |
| STA | STATION PREFIX |
| AH | AHEAD STATION SUFFIX |
| BK | BACK STATION SUFFIX |
| D | CURVE DEGREE OF (100FT) |
| R | CURVE RADUIS OF |
| T | CURVE TANGENT LENGTH |
| L | CURVE LENGTH OF |
| E | CURVE EXTERNAL DISTANCE |

## UTILITY SYMBOLOGY

### UNDERGROUND UTILITIES

- UTILITY (GENERIC-UNKNOWN)
- UT — TELEPHONE
- UE — ELECTRIC
- UC — CABLE (TV)
- UEC — ELECTRIC+CABLE
- UET — ELECTRIC+TELEPHONE
- UCT — CABLE+TELEPHONE
- UECT — ELECTRIC+CABLE+TELEP.
- G — GAS LINE
- W — WATER LINE
- S — SANITARY SEWER (SEPTIC)

### ABOVE GROUND UTILITIES (AERIAL)

- UTILITY (GENERIC-UNKNOWN)
- T — TELEPHONE
- E — ELECTRIC
- C — CABLE (TV)
- EC — ELECTRIC+CABLE
- ET — ELECTRIC+TELEPHONE
- AER E&T — ELECTRIC+TELEPHONE
- CT — CABLE+TELEPHONE
- ECT — ELECTRIC+CABLE+TELEP.
- UTILITY POLE GUY WIRE

## PROJECT CONSTRUCTION SYMBOLOGY

### PROJECT DESIGN & LAYOUT SYMBOLOGY

- CZ — CLEAR ZONE
- PLAN LAYOUT MATCHLINE

### PROJECT CONSTRUCTION FEATURES

- TOP OF CUT SLOPE
- TOE OF FILL SLOPE
- STONE FILL
- BOTTOM OF DITCH ℄
- CULVERT PROPOSED
- STRUCTURE SUBSURFACE
- PDF — PDF — PROJECT DEMARCATION FENCE
- BF — BF — BARRIER FENCE
- TREE PROTECTION ZONE (TPZ)
- STRIPING LINE REMOVAL
- SHEET PILES

## CONVENTIONAL BOUNDARY SYMBOLOGY

### BOUNDARY LINES

- TOWN LINE — TOWN BOUNDARY LINE
- COUNTY LINE — COUNTY BOUNDARY LINE
- STATE LINE — STATE BOUNDARY LINE
- PROPOSED STATE R.O.W. (LIMITED ACCESS)
- PROPOSED STATE R.O.W.
- STATE ROW (LIMITED ACCESS)
- STATE ROW
- TOWN ROW
- PERMANENT EASEMENT LINE (P)
- TEMPORARY EASEMENT LINE (T)
- SURVEY LINE
- P/L — PROPERTY LINE (P/L)
- SR SR SR — SLOPE RIGHTS
- 6F — 6F — 6F PROPERTY BOUNDARY
- 4F — 4F — 4F PROPERTY BOUNDARY
- HAZ — HAZ — HAZARDOUS WASTE

## EPSC LAYOUT PLAN SYMBOLOGY

### EPSC MEASURES

- FILTER CURTAIN
- SILT FENCE
- SILT FENCE WOVEN WIRE
- CHECK DAM
- DISTURBED AREAS REQUIRING RE-VEGETATION
- EROSION MATTING

SEE EPSC DETAIL SHEETS FOR ADDITIONAL SYMBOLOGY

### ENVIRONMENTAL RESOURCES

- WETLAND BOUNDARY
- RIPARIAN BUFFER ZONE
- WETLAND BUFFER ZONE
- SOIL TYPE BOUNDARY
- T&E — THREATENED & ENDANGERED SPECIES
- HAZ — HAZ — HAZARDOUS WASTE AREA
- AG — AGRICULTURAL LAND
- HABITAT — FISH & WILDLIFE HABITAT
- FLOOD PLAIN — FLOOD PLAIN
- OHW — ORDINARY HIGH WATER (OHW)
- STORM WATER
- USDA FOREST SERVICE LANDS
- WILDLIFE HABITAT SUIT/CONN

### ARCHEOLOGICAL & HISTORIC

- ARCH — ARCHEOLOGICAL BOUNDARY
- HISTORIC DIST — HISTORIC DISTRICT BOUNDARY
- HISTORIC — HISTORIC AREA
- (H) HISTORIC STRUCTURE

## CONVENTIONAL TOPOGRAPHIC SYMBOLOGY

### EXISTING FEATURES

- ROAD EDGE PAVEMENT
- ROAD EDGE GRAVEL
- DRIVEWAY EDGE
- DITCH
- FOUNDATION
- FENCE (EXISTING)
- FENCE WOOD POST
- FENCE STEEL POST
- GARDEN
- ROAD GUARDRAIL
- RAILROAD TRACKS
- CULVERT (EXISTING)
- STONE WALL
- WALL
- WOOD LINE
- BRUSH LINE
- HEDGE
- BODY OF WATER EDGE
- LEDGE EXPOSED

PROJECT NAME: HARTFORD
PROJECT NUMBER: IM 091-2(79)

FILE NAME: 12al32/sl2al32excel.dgn
PROJECT LEADER: K. HIGGINS
DESIGNED BY: W. LAMMER
LEGEND SHEET

PLOT DATE: 15-DEC-2014
DRAWN BY: K. FRIEDLAND
CHECKED BY: J. SALVATORI
SHEET 16 OF 166

## GPS CONTROL POINTS

PT #1 EXIT 4
NORTH = 416856.520
EAST = 1683631.840
ELEV. = 570.79

THE STATION IS LOCATED ABOUT 1.6 KM (1.00 MI) NORTH OF THE INTERSTATE 91 AND 89 INTERCHANGE IN HARTFORD, WHITE RIVER JUNCTION, AT THE DEPARTMENT OF TRANSPORTATION DISTRICT OFFICE. TO REACH FROM THE INTERSTATE HIGHWAY 91 BRIDGES OVER U.S. ROUTE 5 IN WHITE RIVER JUNCTION, GO NORTHEAST ALONG U.S. ROUTE 5 FOR 0.2 MI (0.3 KM) TO HOLIDAY INN DRIVE ON THE RIGHT. TURN RIGHT AND GO EAST 0.08 KM (0.05 MI) TO THE INTERSECTION OF BESWICK DRIVE ON THE RIGHT. TURN RIGHT AND GO SOUTH ON BESWICK DRIVE FOR 0.32 KM (0.20 MI) TO THE GATE TO THE VERMONT AGENCY OF TRANSPORTATION DISTRICT 4 OFFICE. PASS THROUGH GATE AND CONTINUE ON PAVED ROAD FOR 0.08 KM (0.05 MI) TO THE STATION ON THE LEFT, IN A GRASS AREA JUST NORTH OF THE STORAGE UTILITY BUILDING. STATION MARK IS A STATE OF VERMONT SURVEY MARK DISK SET IN THE TOP OF A ROCK OUTCROP FLUSH WITH GROUND SURFACE. IT IS 245 FT (74.7 M) SOUTHEAST OF THE SOUTHEAST CORNER OF THE DISTRICT 4 OFFICE, 27.5 FT (8.4 M) NORTHEAST OF THE NORTHWEST CORNER OF THE UTILITY STORAGE BUILDING, 44.7 FT (13.6 M) NORTHWEST OF THE NORTHEAST CORNER OF THE UTILITY STORAGE BUILDING, 55 FT (16.8 M) EAST OF THE EAST EDGE OF THE PAVED GARAGE YARD AND 5.7 FT (1.7 M) NORTH OF A CARSONITE WITNESS POST.

PT #10 E 56
NORTH = 418205.760
EAST = 1683404.010
ELEV. = 573.98

THE STATION IS LOCATED APPROXIMATELY 6.88 KM (4.25 MI) WEST OF LEBANON NEW HAMPSHIRE, 5.88 KM (3.65 MI) NORTH OF NORTH HARTLAND VERMONT, 1.63 KM (1.00 MI) WEST OF WHITE RIVER JUNCTION VERMONT, AND IS AT THE JUNCTION OF INTERSTATE 91 (EXIT 5) AND STATE HIGHWAY 5. TO REACH THE STATION FROM THE JUNCTION OF INTERSTATES 89 AND 91, PROCEED NORTH 0.35 MI (0.56 KM) ALONG INTERSTATE 91 TO THE JUNCTION OF INTERSTATE 91 (EXIT 5) AND STATE HIGHWAY 5. TURN LEFT FROM THE INTERSTATE 91 OFFRAMP, AND PROCEED SOUTHWEST 0.1 MI, (0.2 KM) PASSING UNDERNEATH INTERSTATE 91, TO THE ONRAMP FOR INTERSTATE 91 SOUTHBOUND ON THE RIGHT. TURN RIGHT AND PROCEED NORTHERLY AND THEN EASTERLY 0.3 MI (0.5 KM) ALONG THE ONRAMP TO THE STATION ON THE LEFT IN THE MEDIAN BETWEEN INTERSTATE 91 SOUTHBOUND AND THE ONRAMP. THE STATION IS AN STANDARD NGS VERTICAL CONTROL DISK STAMPED--E 56 1978-- SET FLUSH IN THE TOP OF A ROCK OUTCROP APPROXIMATELY 4 M (13.1 FT) BY 6 M (19.7 FT) IN SIZE AND PROJECTING 1.3 M (4.3 FT) ABOVE THE GROUND. THE STATION IS LOCATED 27.00 M (88.58 FT) ON A BEARING OF NORTH 15 DEGREES EAST FROM A CATCH BASIN NEAR THE JOINING OF THE ONRAMP AND THE HIGHWAY, 12.70 M (41.67FT) ON A BEARING OF NORTH 60 DEGREES WEST FROM THE EAST EDGE OF PAVEMENT OF THE ONRAMP, 11.75 M (38.55 FT) ON A BEARING OF NORTH 74 DEGREES EAST FROM THE WEST EDGE OF PAVEMENT OF THE HIGHWAY, 10.19 M (33.43 FT) ON A BEARING OF NORTH 12 DEGREES WEST FROM THE WEST POST OF A DOUBLE POSTED SIGN--MERGING LANE--, AND 1.14 M (3.74 FT) ON A BEARING OF NORTH 80 DEGREES EAST FROM A CARSONITE MARKER. ALL DISTANCES ARE SLOPE DISTANCES AND THE DIRECTIONS ARE MAGNETIC COMPASS BEARINGS.

## TRAVERSE TIES

| HVCTRL #2 | | | | |
|---|---|---|---|---|
| NORTH = 416899.63 | NORTH = | NORTH = | NORTH = | NORTH = |
| EAST = 1683297.867 | EAST = | EAST = | EAST = | EAST = |
| ELEV. = 566.447 | ELEV. = | ELEV. = | ELEV. = | ELEV. = |

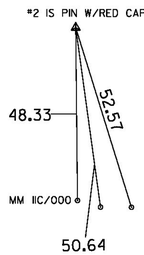


## ALIGNMENT TIES

| | | | | |
|---|---|---|---|---|
| NORTH = | NORTH = | NORTH = | NORTH = | NORTH = |
| EAST = | EAST = | EAST = | EAST = | EAST = |
| ELEV. = | ELEV. = | ELEV. = | ELEV. = | ELEV. = |

DATUM
VERTICAL NAVD88
HORIZONTAL NAD83(2011)
ADJUSTMENT COMPASS

PROJECT NAME: HARTFORD
PROJECT NUMBER: IM 091-2(79)

FILE NAME: X12A132T1.DGN
PROJECT LEADER: K. HIGGINS
DESIGNED BY: VTRANS
TIE SHEET

PLOT DATE: 15-DEC-2014
DRAWN BY: C. CYR
CHECKED BY: P. BEYOR

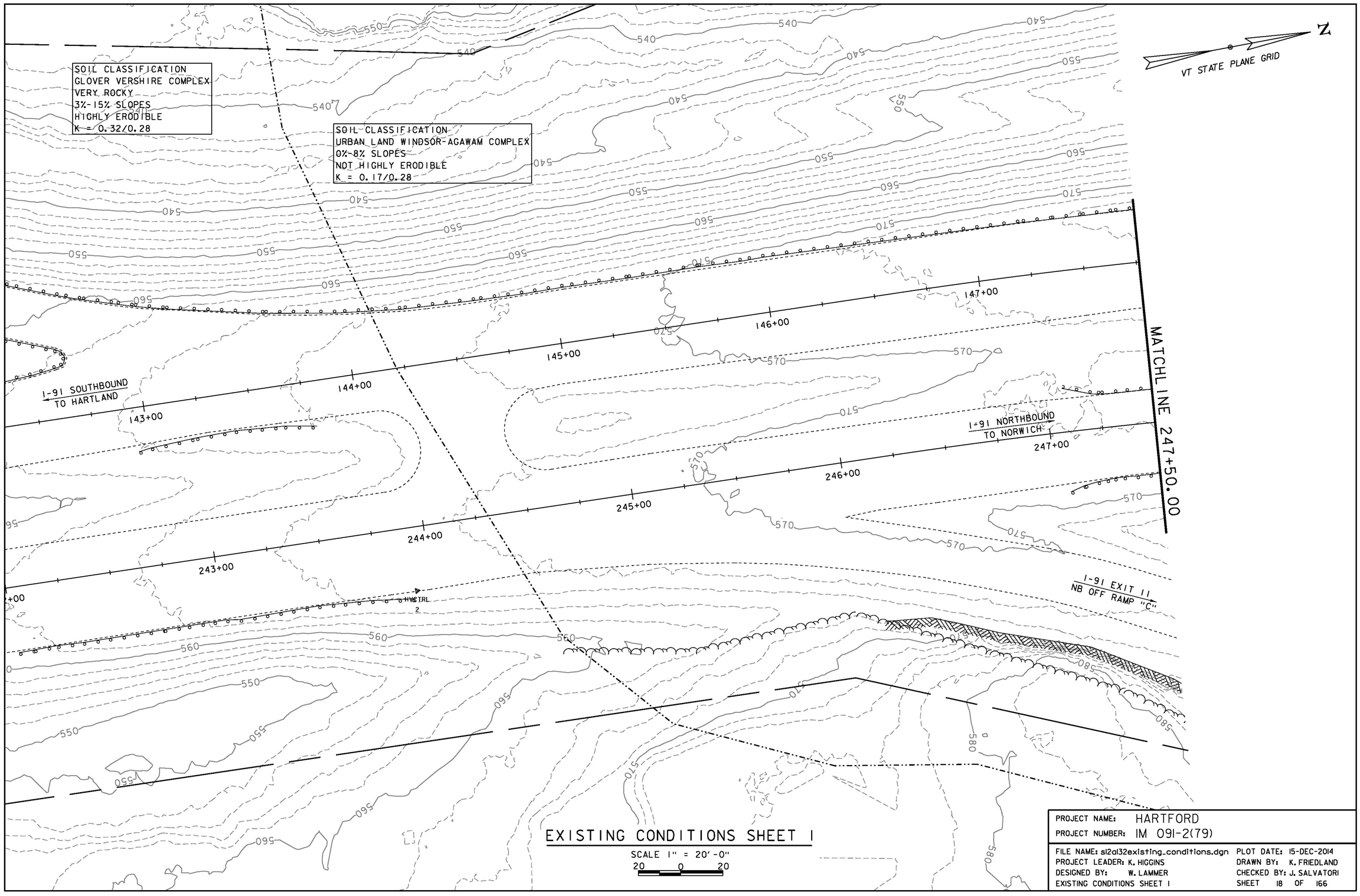


# EXISTING CONDITIONS SHEET 1

SCALE 1" = 20'-0"
20 0 20

| | |
|---|---|
| PROJECT NAME: | HARTFORD |
| PROJECT NUMBER: | IM 091-2(79) |
| FILE NAME: sl2al32existing_conditions.dgn | PLOT DATE: 15-DEC-2014 |
| PROJECT LEADER: K. HIGGINS | DRAWN BY: K. FRIEDLAND |
| DESIGNED BY: W. LAMMER | CHECKED BY: J. SALVATORI |
| EXISTING CONDITIONS SHEET 1 | SHEET 18 OF 166 |

SOIL CLASSIFICATION
GLOVER VERSHIRE COMPLEX
VERY ROCKY
15%-35% SLOPES
HIGHLY ERODIBLE
K = 0.32/0.28

VT STATE PLANE GRID

BENCHMARK
HIGHWAY DEPT.
BM-1912-2
ELEV.=577.34

US-5
TO HARTLAND

I-91 EXIT 11
SB ON-RAMP "A"

FENCE

I-91 SOUTHBOUND
TO HARTLAND

MATCHLINE 247+50.00

MATCHLINE 253+25.00

I-91 NORTHBOUND
TO NORWICH

I-91 EXIT 11
NB OFF RAMP "C"

US-5
TO NORWICH

EXISTING BRIDGE DATA
3 SPAN ROLLED BEAM
LENGTH = 202.0'
WIDTH 37.3' (43N) & 42' (43S)
BUILT IN 1966

SOIL CLASSIFICATION
URBAN LAND-WINDSOR-AGAWAM COMPLEX
0%-8% SLOPES
NOT HIGHLY ERODIBLE
K = 0.17/0.28

# EXISTING CONDITIONS SHEET 2

SCALE 1" = 20'-0"
20 0 20

| | |
|---|---|
| PROJECT NAME: | HARTFORD |
| PROJECT NUMBER: | IM 091-2(79) |
| FILE NAME: sl2al32existing_conditions.dgn | PLOT DATE: 15-DEC-2014 |
| PROJECT LEADER: K. HIGGINS | DRAWN BY: K. FRIEDLAND |
| DESIGNED BY: W. LAMMER | CHECKED BY: J. SALVATORI |
| EXISTING CONDITIONS SHEET 2 | SHEET 19 OF 166 |

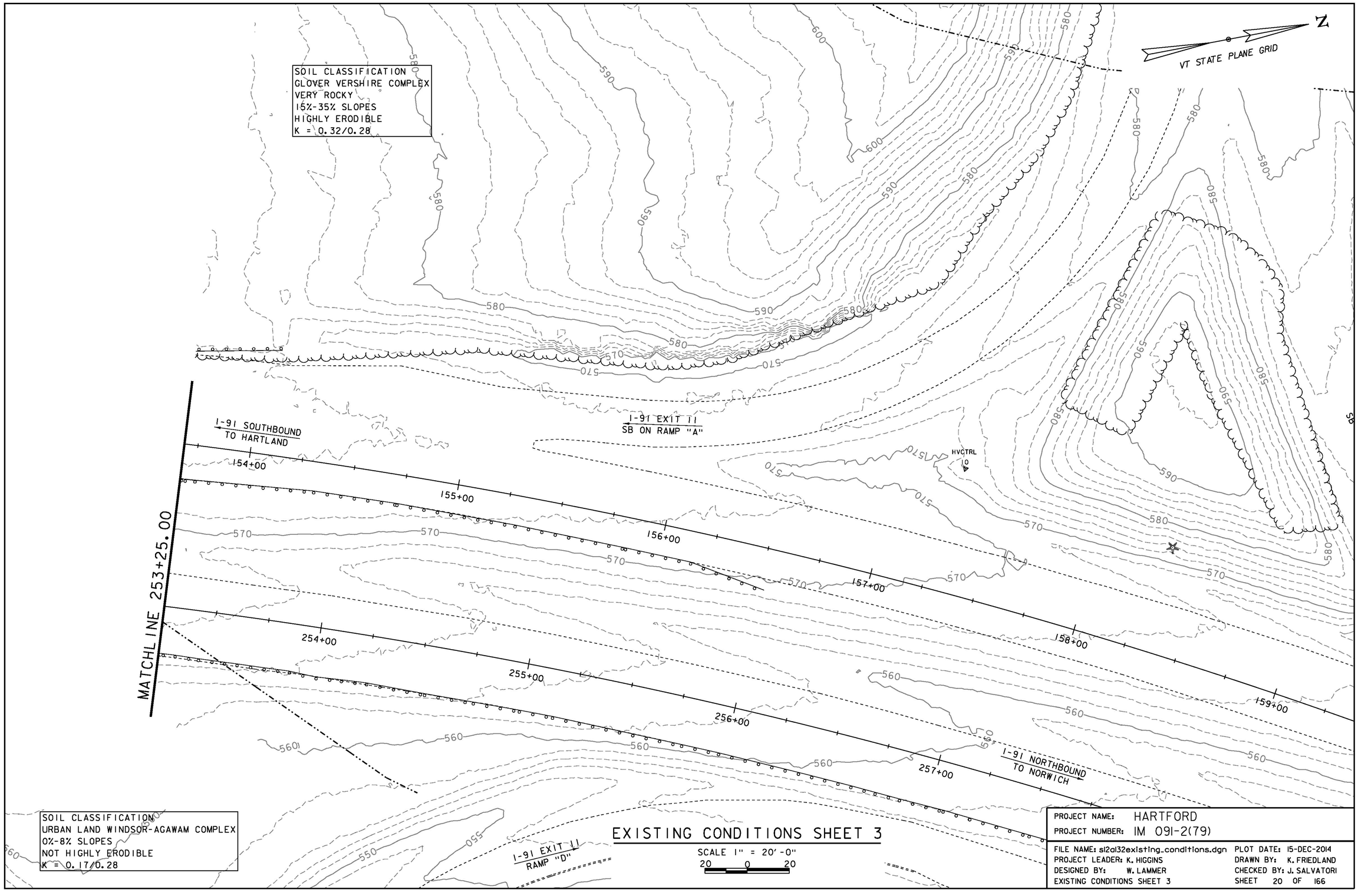


# EXISTING CONDITIONS SHEET 3

SCALE 1" = 20'-0"
20 0 20

| | |
|---|---|
| PROJECT NAME: | HARTFORD |
| PROJECT NUMBER: | IM 091-2(79) |
| FILE NAME: sl2al32existing_conditions.dgn | PLOT DATE: 15-DEC-2014 |
| PROJECT LEADER: K. HIGGINS | DRAWN BY: K. FRIEDLAND |
| DESIGNED BY: W. LAMMER | CHECKED BY: J. SALVATORI |
| EXISTING CONDITIONS SHEET 3 | SHEET 20 OF 166 |

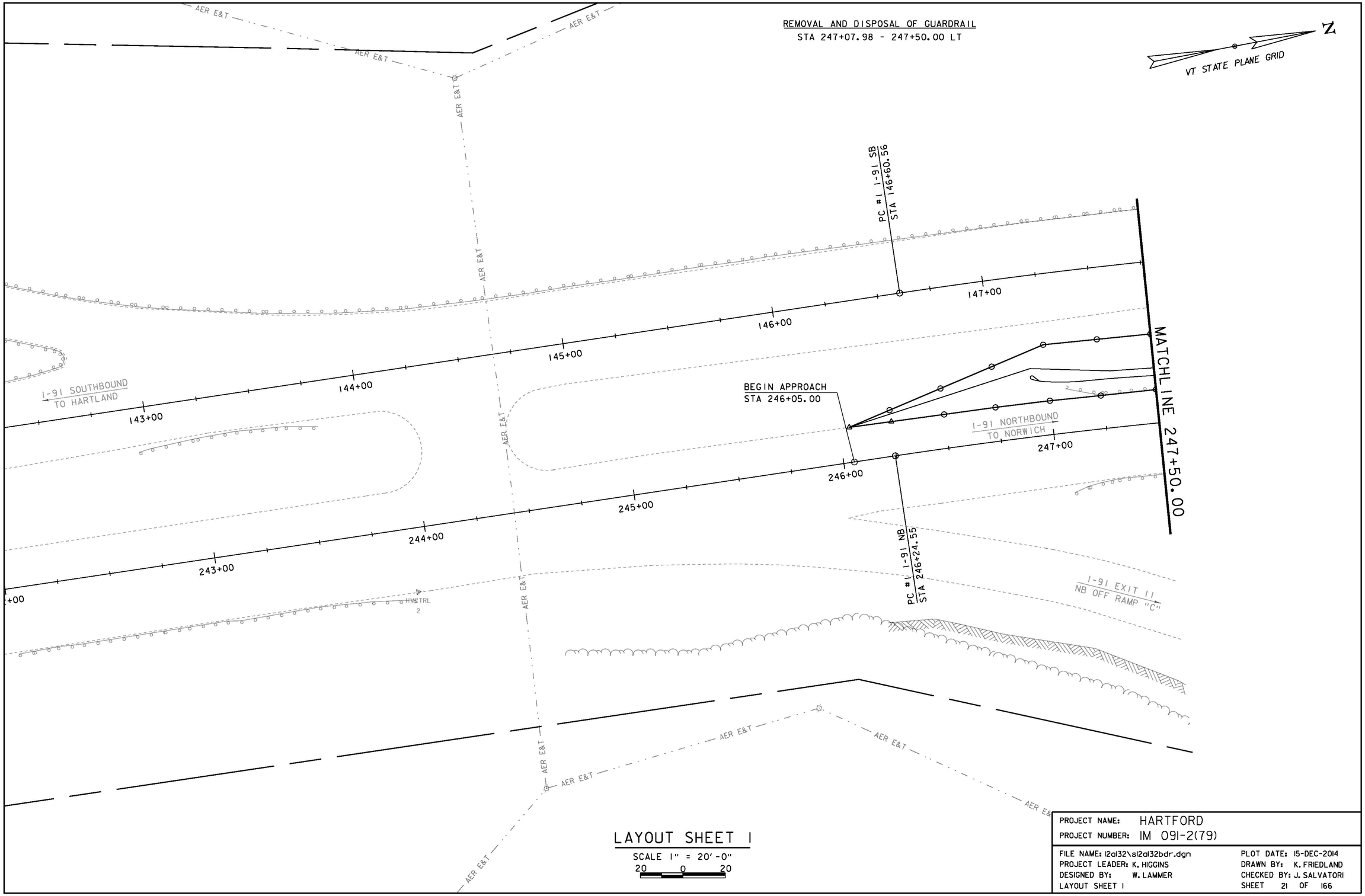


LAYOUT SHEET 1

SCALE 1" = 20'-0"

20 0 20

| | |
|---|---|
| PROJECT NAME: HARTFORD | |
| PROJECT NUMBER: IM 091-2(79) | |
| FILE NAME: 12a132\s12a132bdr.dgn | PLOT DATE: 15-DEC-2014 |
| PROJECT LEADER: K. HIGGINS | DRAWN BY: K. FRIEDLAND |
| DESIGNED BY: W. LAMMER | CHECKED BY: J. SALVATORI |
| LAYOUT SHEET 1 | SHEET 21 OF 166 |

N

VT STATE PLANE GRID

BEGIN BRIDGE 43S
STA 149+97.96
FG = 575.13

BEGIN APPROACH / PAVEMENT
STA 148+00.00

BEGIN PROJECT
STA 149+50.00

CL BEARING
STA 150+02.00
FG = 575.15

CL BEARING
STA 151+30.00
FG = 575.44

STONE FILL, TYPE II (TYP)

BENCHMARK
HIGHWAY DEPT.
BM 1912 2
ELEV. = 577.34

END BRIDGE 43S
STA 151+34.12
FG = 575.44

END PROJECT
STA 151+75.00

END APPROACH / PAVEMENT
STA 153+50.00

GUIDE SIGN
(WOODSTOCK
RUTLAND
NEXT RIGHT)

I-91 SOUTHBOUND
TO HARTLAND

I-91 EXIT 11
SB ON RAMP "A"

US-5
TO HARTLAND

SIGN
DIRECTION GROUP

I-91 NORTHBOUND
TO NORWICH

US-5
TO NORWICH

MATCHLINE 247+50.00

MATCHLINE 253+25.00

BEGIN PAVEMENT
STA 247+75.00

BEGIN PROJECT
STA 249+50.00

BEGIN BRIDGE 43N
STA 249+89.46
FG = 572.67

CL BEARING
STA 249+93.50
FG = 572.64

CL BEARING
STA 251+21.50
FG = 571.78

END PROJECT
STA 251+75.00

END BRIDGE 43N
STA 251+25.62
FG = 571.74

END APPROACH / PAVEMENT
STA 253+00.00

REMOVAL AND DISPOSAL OF GUARDRAIL

STA 148+45.38 - 149+44.06 LT
STA 148+57.07 - 149+64.67 RT
STA 151+66.05 - 152+42.00 LT
STA 151+87.09 - 152+60.53 RT

STA 248+41.00 - 249+61.25 RT
STA 247+07.98 - 249+39.71 LT
STA 249+28.12 - 249+35.28 FLT
STA 251+50.58 - 251+60.14 FLT
STA 251+58.68 - 252+61.02 LT
STA 251+84.80 - 252+95.05 RT

BITUMINOUS CONCRETE CURB, TYPE A

STA 149+31.89 - 149+90.20 RT

STA 251+50.66 - 251+98.52 RT

NOTES:

1. FOR ADDITIONAL INFORMATION ON RAIL, UTILITIES DRAINAGE, SIGNS AND PAVEMENT MARKINGS, SEE THOSE INDIVIDUAL SHEETS.

# LAYOUT SHEET 2

SCALE 1" = 20'-0"
20 0 20

PROJECT NAME: HARTFORD
PROJECT NUMBER: IM 091-2(79)

FILE NAME: 12a132\sl2a132bdr.dgn
PROJECT LEADER: K. HIGGINS
DESIGNED BY: W. LAMMER
LAYOUT SHEET 2

PLOT DATE: 15-DEC-2014
DRAWN BY: K. FRIEDLAND
CHECKED BY: J. SALVATORI
SHEET 22 OF 166

| CURVE I-91 SOUTH | CURVE I-91 NORTH |
|---|---|
| DELTA = 39° 10' 51" | DELTA = 39° 14' 03" |
| D = 2° 12' 13" | D = 2° 13' 30" |
| R = 2600.00' | R = 2575.00' |
| T = 925.33' | T = 917.78' |
| L = 1777.98' | L = 1763.27' |
| E = 159.75' | E = 158.67' |
| e (max) = 0.06 | e (max) = 0.06 |

N

VT STATE PLANE GRID

PI #1 I-91 SB
STA 155+85.89

PI #1 I-91 NB
STA 255+42.33

I-91 SOUTHBOUND
TO HARTLAND

I-91 EXIT 11
SB ON RAMP "A"

HVCTRL
10

MATCHLINE 253+25.00

154+00
155+00
156+00
157+00
158+00
159+00
254+00
255+00
256+00
257+00

I-91 NORTHBOUND
TO NORWICH

I-91 EXIT 11
RAMP "D"

# LAYOUT SHEET 3

SCALE 1" = 20'-0"
20 0 20

| | |
|---|---|
| PROJECT NAME: | HARTFORD |
| PROJECT NUMBER: | IM 091-2(79) |
| FILE NAME: l2al32\sl2al32bdr.dgn | PLOT DATE: 15-DEC-2014 |
| PROJECT LEADER: K. HIGGINS | DRAWN BY: K. FRIEDLAND |
| DESIGNED BY: W. LAMMER | CHECKED BY: J. SALVATORI |
| LAYOUT SHEET 3 | SHEET 23 OF 166 |

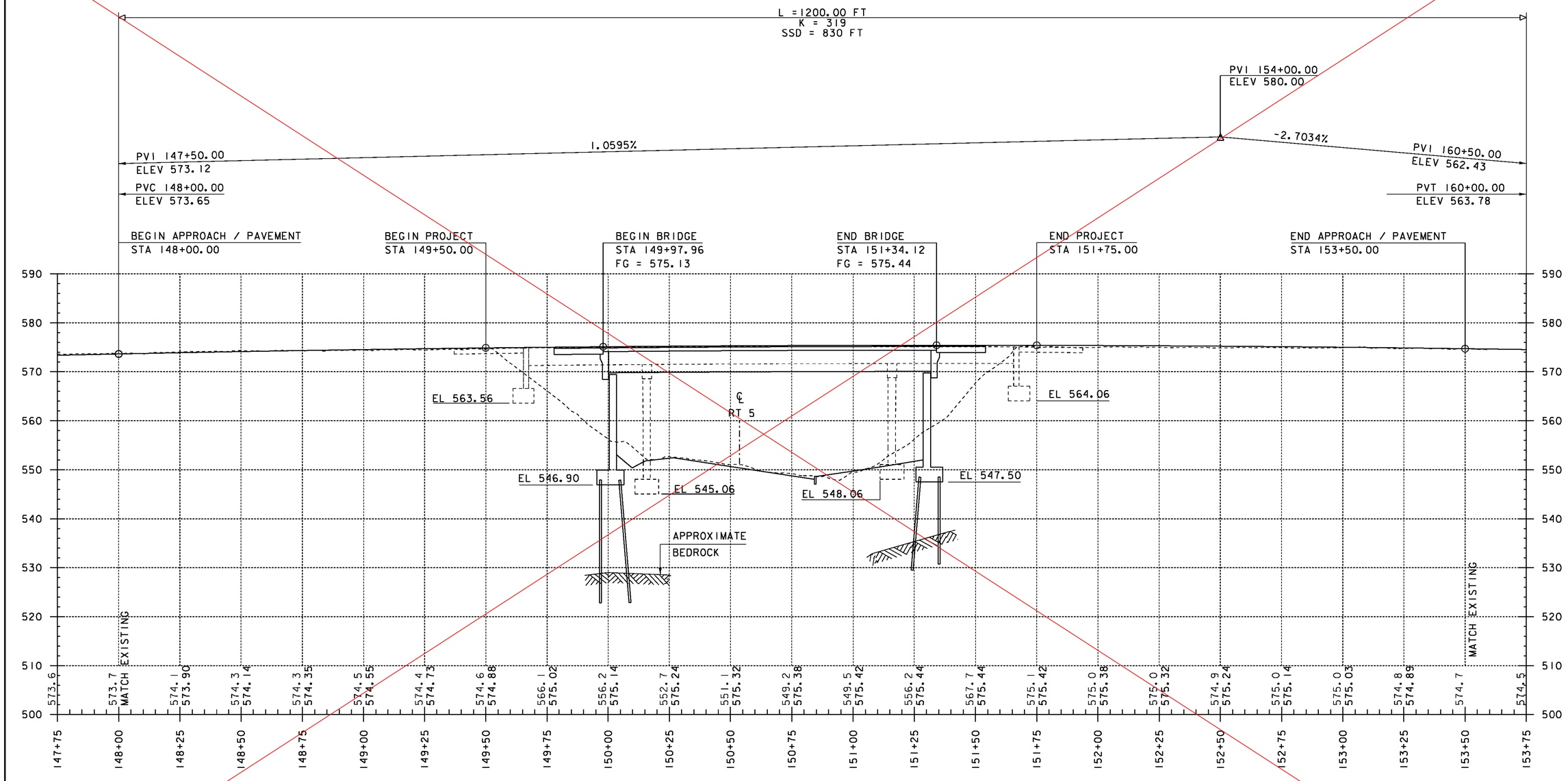


## I-91 SB PROFILE

HOR. SCALE 1" = 20'-0"
VER. SCALE 1" = 10'-0"

EXISTING GROUND IS FROM LIDAR IMAGERY.

THE GRADES SHOWN TO THE NEAREST TENTH ARE THE EXISTING GROUND ELEVATIONS ALONG THE PROPOSED ALIGNMENT.

THE GRADES SHOWN TO THE NEAREST HUNDREDTH ARE THE FINISHED GROUND ELEVATIONS ALONG THE PROPOSED ALIGNMENT.

SEE SHEET 24-R

PROJECT NAME: HARTFORD
PROJECT NUMBER: IM 091-2(79)

FILE NAME: sl2al32profile.dgn
PROJECT LEADER: K. HIGGINS
DESIGNED BY: W. LAMMER
I-91 SOUTHBOUND PROFILE

PLOT DATE: 15-DEC-2014
DRAWN BY: K. FRIEDLAND
CHECKED BY: J. SALVATORI
SHEET 24 OF 166

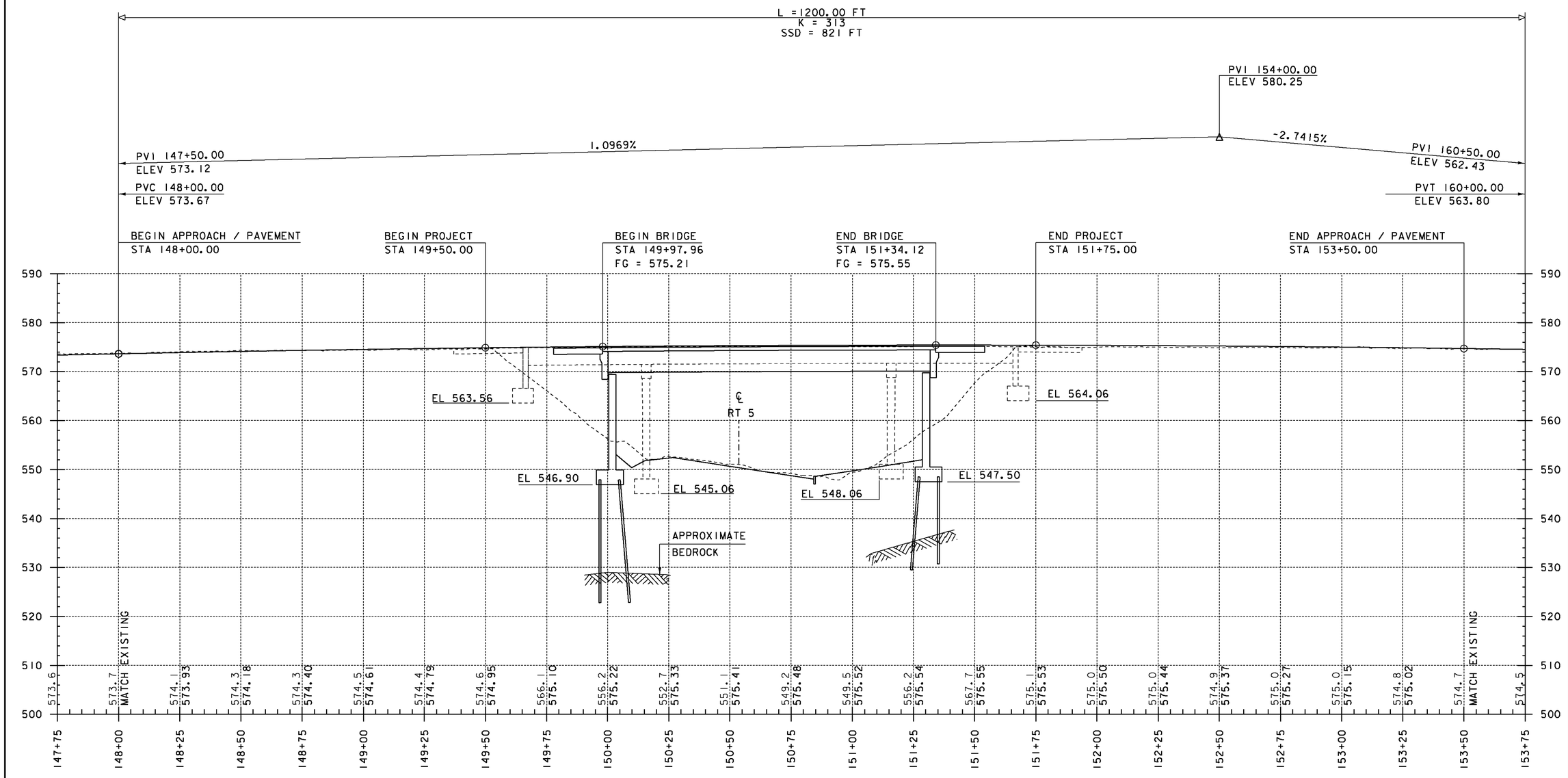


## I-91 SB PROFILE

HOR. SCALE 1" = 20'-0"
VER. SCALE 1" = 10'-0"

EXISTING GROUND IS FROM LIDAR IMAGERY.

THE GRADES SHOWN TO THE NEAREST TENTH ARE THE EXISTING GROUND ELEVATIONS ALONG THE PROPOSED ALIGNMENT.

THE GRADES SHOWN TO THE NEAREST HUNDREDTH ARE THE FINISHED GROUND ELEVATIONS ALONG THE PROPOSED ALIGNMENT.

| REVISION | DATE | DESCRIPTION | BY |
|---|---|---|---|
| 1 | 06-29-2015 | REVISED DUE TO BEAM PROFILES | JTS |

PROJECT NAME: HARTFORD
PROJECT NUMBER: IM 091-2(79)

FILE NAME: sl2al32profile.dgn
PROJECT LEADER: K. HIGGINS
DESIGNED BY: W. LAMMER
I-91 SOUTHBOUND PROFILE

PLOT DATE: 29-JUN-2015
DRAWN BY: K. FRIEDLAND
CHECKED BY: J. SALVATORI
SHEET 24R OF 166

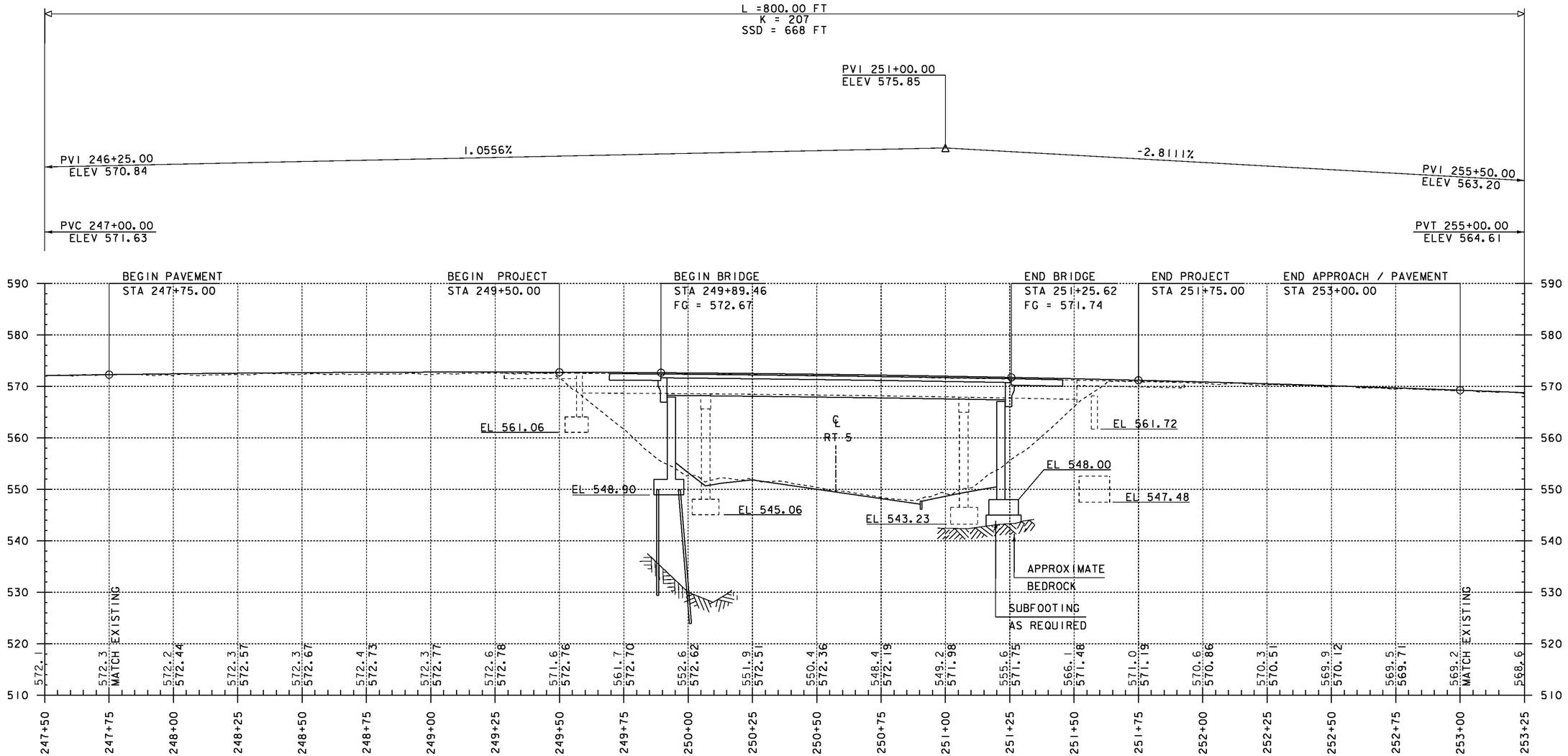


## I-91 NB PROFILE

HOR. SCALE 1" = 20'-0"
VER. SCALE 1" = 10'-0"

EXISTING GROUND IS FROM LIDAR IMAGERY.

THE GRADES SHOWN TO THE NEAREST TENTH ARE THE EXISTING GROUND ELEVATIONS ALONG THE PROPOSED ALIGNMENT.

THE GRADES SHOWN TO THE NEAREST HUNDREDTH ARE THE FINISHED GROUND ELEVATIONS ALONG THE PROPOSED ALIGNMENT.

PROJECT NAME: HARTFORD
PROJECT NUMBER: IM 091-2(79)

FILE NAME: sl2al32profile.dgn
PROJECT LEADER: K. HIGGINS
DESIGNED BY: W. LAMMER
I-91 NORTHBOUND PROFILE

PLOT DATE: 15-DEC-2014
DRAWN BY: K. FRIEDLAND
CHECKED BY: J. SALVATORI
SHEET 25 OF 166

N

VT STATE PLANE GRID

R=50'

CZ

MATCHLINE 350+50.00

US5 PT #1
STA 346+42.03

US 5 SOUTHBOUND
TO HARTLAND

345+00
" E

346+00

347+00

348+00

349+00

350+00

US 5 NORTHBOUND
TO WILDER

BEGIN PAVEMENT
~~STA 348+00.00~~
STA 347+64.00

## US 5 LAYOUT SHEET 1

SCALE 1" = 20'-0"
20 0 20

| | |
|---|---|
| PROJECT NAME: | HARTFORD |
| PROJECT NUMBER: | IM 091-2(79) |

| | |
|---|---|
| FILE NAME: si2al32bdr_rte5.dgn | PLOT DATE: 15-DEC-2014 |
| PROJECT LEADER: K. HIGGINS | DRAWN BY: K. FRIEDLAND |
| DESIGNED BY: W. LAMMER | CHECKED BY: J. SALVATORI |
| US 5 LAYOUT SHEET 1 | SHEET 26 OF 166 |

REMOVAL AND DISPOSAL OF GUARDRAIL
STA 350+90.77 - 353+74.00 RT

REMOVING AND RESETTING LIGHT POLE
STA 351+78.39 RT

REMOVING AND RESETTING FENCE
STA 351+06.24 - 351+95.34 RT

VERTICAL GRANITE CURB
STA 351+00.00 + 354+75.00 LT

GRANITE SLOPE EDGING
STA 353+54.40 - 355+73.10 RT
STA 356+04.25 - 356+95.35 RT

N

VT STATE PLANE GRID

MATCHLINE 350+50.00

MATCHLINE 355+50.00

US5 PC#2
STA 350+97.02

US5 PT#3 / PC#4
STA 355+13.06

US 5 SOUTHBOUND
TO HARTLAND

US 5 NORTHBOUND
TO WILDER

351+00

352+00

353+00

354+00

355+00

S 89°37'44" E

N 67°58'17" E

R=3'-6"

R=1200'

US5 PI#2
STA 352+41.96

US5 PT#2
STA 353+83.19

US5 PC#3
STA 354+27.79

US5 PI#3
STA 354+70.45

FENCE

STREET LIGHT

152+00

151+00

252+00

150+00

250+00

149+00

249+00

US-5 CURVE (2)
DELTA = 22°24'00"
D = 7°49'38"
R = 732.00'
T = 144.94'
L = 286.18'
E = 14.21'

US-5 CURVE (3)
DELTA = 4°59'07"
D = 5°50'47"
R = 980.00'
T = 42.66'
L = 85.27'
E = 0.93'

# US 5 LAYOUT SHEET 2

SCALE 1" = 20'-0"
20 0 20

| | |
|---|---|
| PROJECT NAME: | HARTFORD |
| PROJECT NUMBER: | IM 091-2(79) |
| FILE NAME: sl2al32bdr_rte5.dgn | PLOT DATE: 15-DEC-2014 |
| PROJECT LEADER: K. HIGGINS | DRAWN BY: K. FRIEDLAND |
| DESIGNED BY: W. LAMMER | CHECKED BY: J. SALVATORI |
| US 5 LAYOUT SHEET 2 | SHEET 27 OF 166 |

GRANITE SLOPE EDGING
STA 356+03.75 - 356+95.86 RT
STA 355+50.00 - 355+74.51 RT

US-5 CURVE (4)
DELTA = 28°39'25"
D = 6°01'52"
R = 950.00'
T = 242.65'
L = 475.15'
E = 30.50'

N

VT STATE PLANE GRID

MATCHLINE 355+50.00

R=55'

R=55'

US 5 SOUTHBOUND
TO HARTLAND

R=225'

356+00

R=3'-6"

357+00

R=16' (TYP)

R=45'

R=5'

R=6'

R=5'

N 62°59'09" E

N 34°19'45" E

358+00

359+00

360+00

END PAVEMENT
~~STA 358+00.00~~ STA 358+60 & STA 359+00

US5 PT#4
STA 359+88.21

US5 POE
STA 360+00.00

US 5 NORTHBOUND
TO WILDER

US5 PI#4
STA 357+55.72

# US 5 LAYOUT SHEET 3

SCALE 1" = 20'-0"
20 0 20

| | |
|---|---|
| PROJECT NAME: | HARTFORD |
| PROJECT NUMBER: | IM 091-2(79) |
| FILE NAME: sl2al32bdr_rte5.dgn | PLOT DATE: 15-DEC-2014 |
| PROJECT LEADER: K. HIGGINS | DRAWN BY: K. FRIEDLAND |
| DESIGNED BY: W. LAMMER | CHECKED BY: J. SALVATORI |
| US 5 LAYOUT SHEET 3 | SHEET 28 OF 166 |

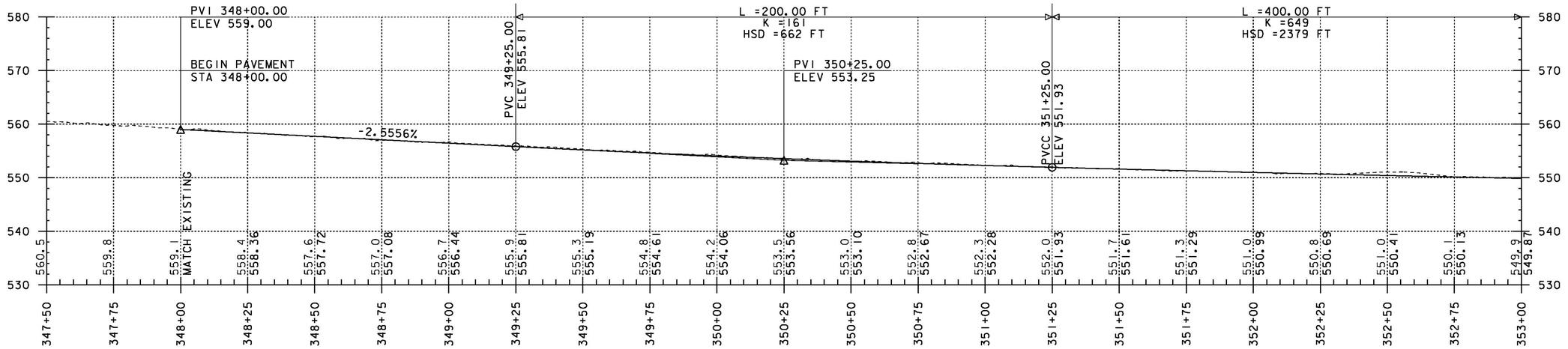


## US 5 PROFILE
## (STA 347+50 - 353+00)

HOR. SCALE 1" = 20'-0"
VER. SCALE 1" = 10'-0"

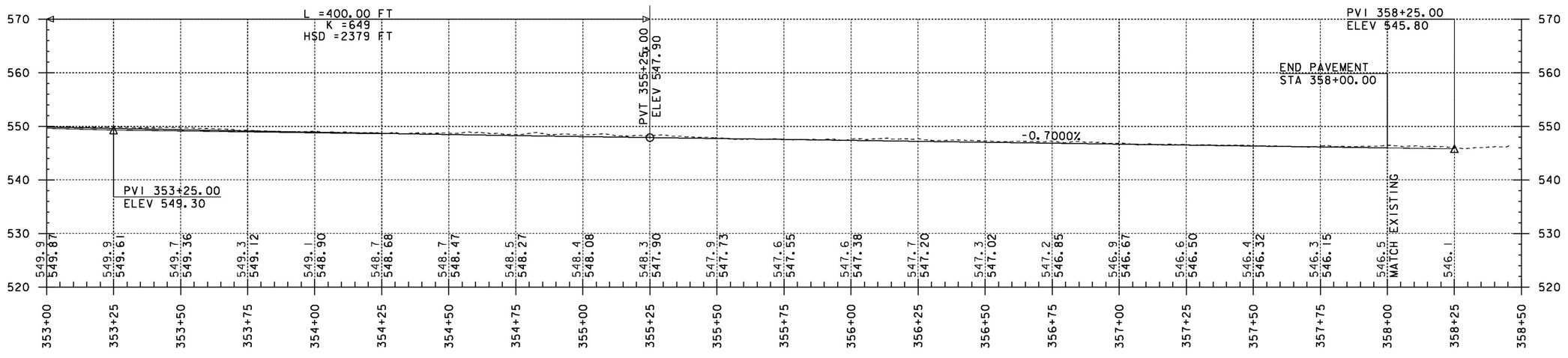


## US 5 PROFILE
## (STA 353+00 - 358+50)

HOR. SCALE 1" = 20'-0"
VER. SCALE 1" = 10'-0"

EXISTING GROUND IS FROM LIDAR IMAGERY.

THE GRADES SHOWN TO THE NEAREST TENTH ARE THE EXISTING GROUND ELEVATIONS ALONG THE PROPOSED ALIGNMENT.

THE GRADES SHOWN TO THE NEAREST HUNDREDTH ARE THE FINISHED GROUND ELEVATIONS ALONG THE PROPOSED ALIGNMENT.

PROJECT NAME: HARTFORD
PROJECT NUMBER: IM 091-2(79)

FILE NAME: s12a132profile.dgn
PROJECT LEADER: K. HIGGINS
DESIGNED BY: W. LAMMER
US 5 PROFILE

PLOT DATE: 15-DEC-2014
DRAWN BY: K. FRIEDLAND
CHECKED BY: J. SALVATORI
SHEET 29 OF 166

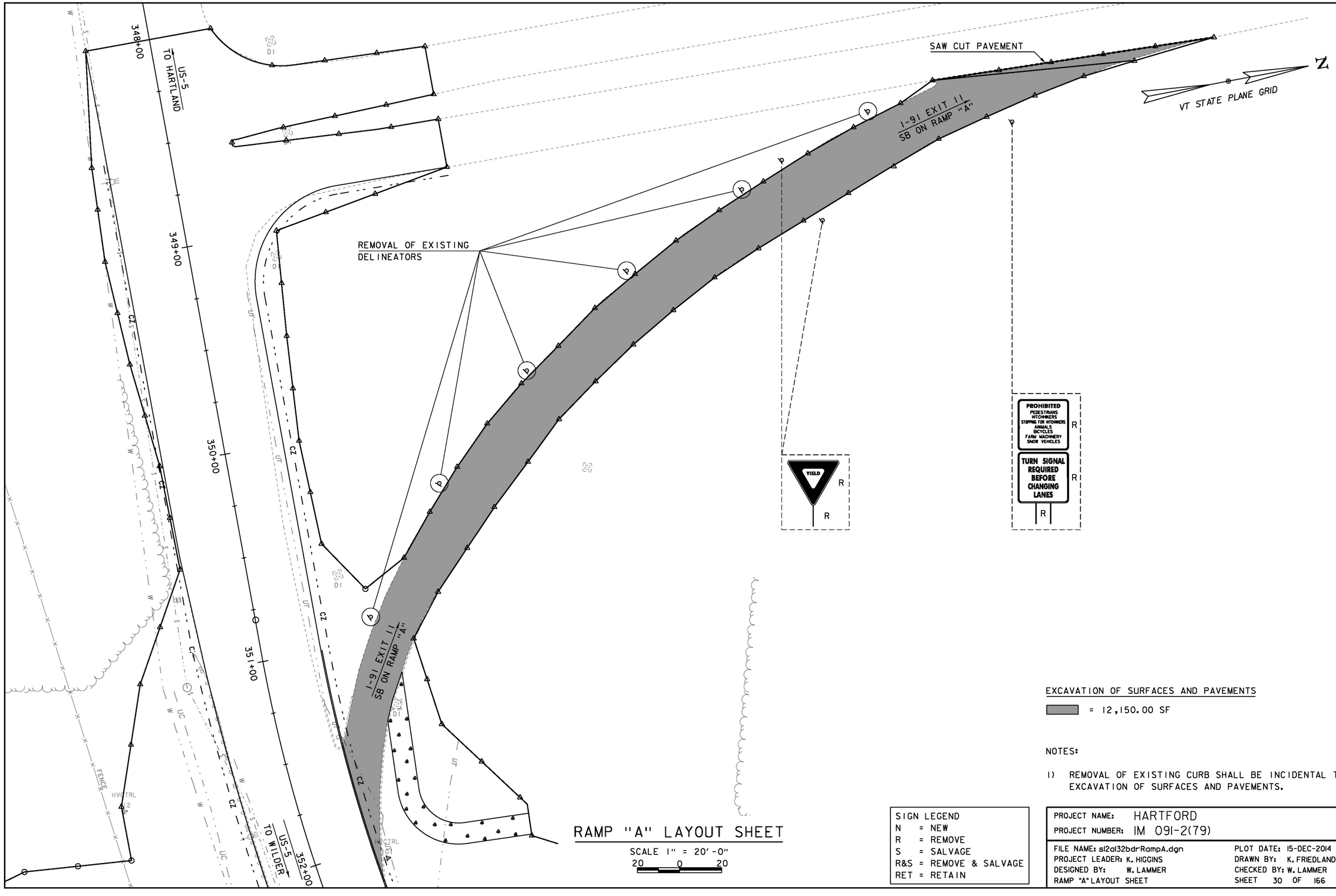


## RAMP "A" LAYOUT SHEET

SCALE 1" = 20'-0"

20 0 20

EXCAVATION OF SURFACES AND PAVEMENTS

= 12,150.00 SF

NOTES:

1) REMOVAL OF EXISTING CURB SHALL BE INCIDENTAL TO EXCAVATION OF SURFACES AND PAVEMENTS.

| SIGN LEGEND | |
|---|---|
| N | = NEW |
| R | = REMOVE |
| S | = SALVAGE |
| R&S | = REMOVE & SALVAGE |
| RET | = RETAIN |

| | |
|---|---|
| PROJECT NAME: | HARTFORD |
| PROJECT NUMBER: | IM 091-2(79) |

| | |
|---|---|
| FILE NAME: sl2al32bdrRampA.dgn | PLOT DATE: 15-DEC-2014 |
| PROJECT LEADER: K. HIGGINS | DRAWN BY: K. FRIEDLAND |
| DESIGNED BY: W. LAMMER | CHECKED BY: W. LAMMER |
| RAMP "A" LAYOUT SHEET | SHEET 30 OF 166 |




⇨ FLOW OF TRAFFIC
● RETROREFLECTIVE PLASTIC DRUM
FLASHING ARROW PANEL
ENERGY ABSORPTION ATTENUATOR
TYPE III BARRICADE
TYPE III (MOD.) BARRICADE
PAVEMENT MARKING REMOVAL

# I-91 SB TRAFFIC CONTROL PLAN 1

## (LEFT LANE CLOSURE)

SCALE 1" = 50'-0"
50 0 50

NOTE TO REVIEWER. THIS SHEET IS FOR ESTIMATING PURPOSES ONLY. CONTRACTOR IS TO FOLLOW THE APPRORIATE T STANDARDS.

PROJECT NAME: HARTFORD
PROJECT NUMBER: IM 091-2(79)

FILE NAME: s12a132detour91_bdr_south.dgn
PROJECT LEADER: K. HIGGINS
DESIGNED BY: J. SALVATORI
I-91SB TRAFFIC CONTROL PLAN 1
PLOT DATE: 15-DEC-2014
DRAWN BY: J. SALVATORI
CHECKED BY: M. MILLER
SHEET 31 OF 166

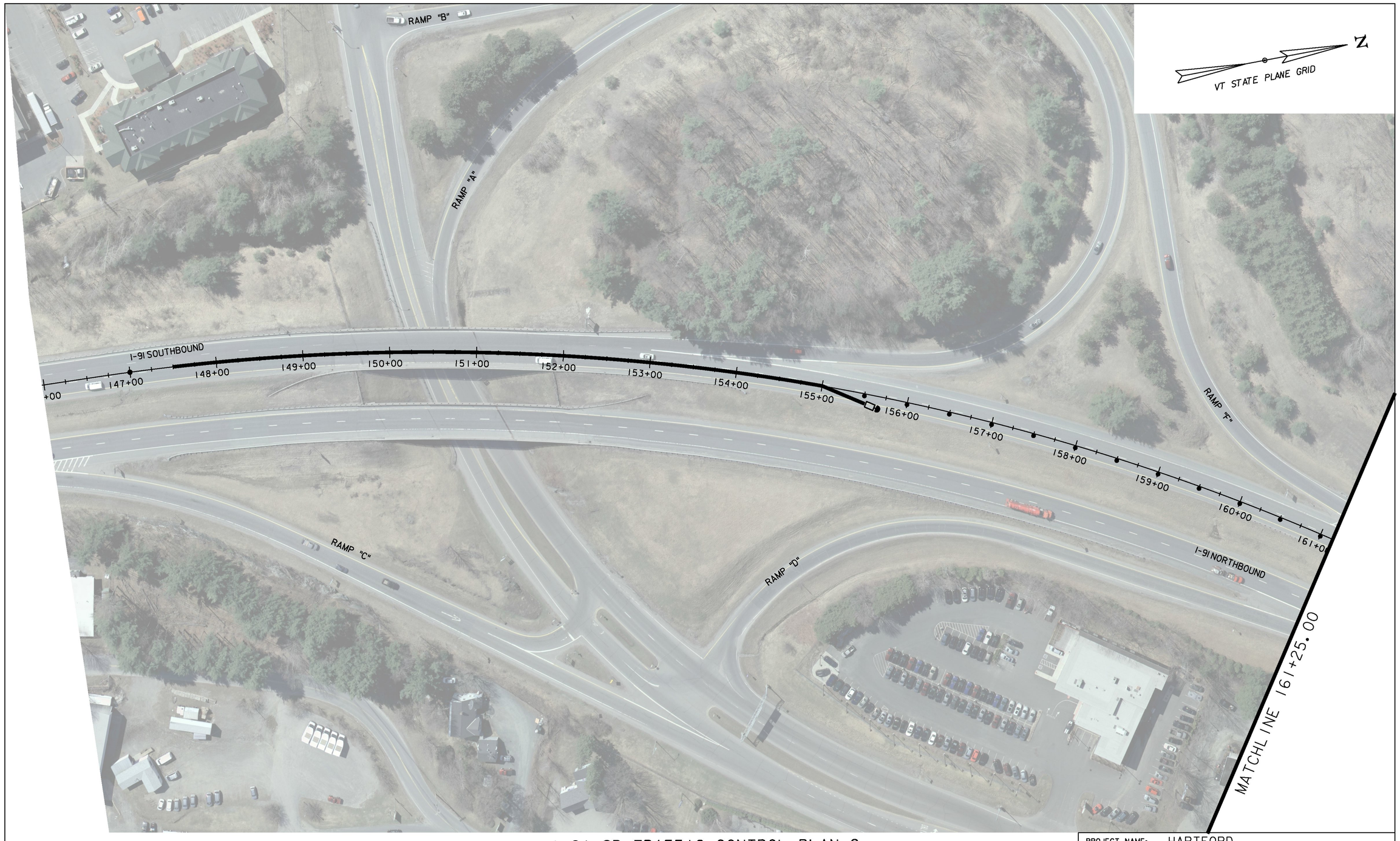


# I-91 SB TRAFFIC CONTROL PLAN 2

## (LEFT LANE CLOSURE)

SCALE 1" = 50'-0"

50 0 50

NOTE TO REVIEWER. THIS SHEET IS FOR ESTIMATING PURPOSES ONLY. CONTRACTOR IS TO FOLLOW THE APPRORIATE T STANDARDS.

PROJECT NAME: HARTFORD
PROJECT NUMBER: IM 091-2(79)

FILE NAME: sl2al32detour91_bdr_south.dgn
PROJECT LEADER: K. HIGGINS
DESIGNED BY: J. SALVATORI
I-91 SB TRAFFIC CONTROL PLAN 2

PLOT DATE: 15-DEC-2014
DRAWN BY: J. SALVATORI
CHECKED BY: M. MILLER
SHEET 32 OF 166




# I-91 SB TRAFFIC CONTROL PLAN 3
## (DURING BRIDGE CLOSURE)

SCALE 1" = 50'-0"
50 0 50

NOTE TO REVIEWER. THIS SHEET IS FOR ESTIMATING PURPOSES ONLY. CONTRACTOR IS TO FOLLOW THE APPRORIATE T STANDARDS.

| | |
|---|---|
| PROJECT NAME: | HARTFORD |
| PROJECT NUMBER: | IM 091-2(79) |
| FILE NAME: s12a132detour91_bdr_south.dgn | PLOT DATE: 15-DEC-2014 |
| PROJECT LEADER: K. HIGGINS | DRAWN BY: J. SALVATORI |
| DESIGNED BY: J. SALVATORI | CHECKED BY: M. MILLER |
| I-91 SB TRAFFIC CONTROL PLAN 3 | SHEET 33 OF 166 |




FOR ADDITIONAL DETAILS SEE STANDARDS
T-1, T-20 AND T-28

# I-91SB TRAFFIC CONTROL PLAN 4
## (DURING BRIDGE CLOSURE)

SCALE 1" = 50'-0"
50 0 50

NOTE TO REVIEWER. THIS SHEET IS FOR ESTIMATING PURPOSES ONLY. CONTRACTOR IS TO FOLLOW THE APPRORIATE T STANDARDS.

PROJECT NAME: HARTFORD
PROJECT NUMBER: IM 091-2(79)

FILE NAME: s12a132detour91_bdr_south.dgn
PROJECT LEADER: K. HIGGINS
DESIGNED BY: J. SALVATORI
I-91 SB TRAFFIC CONTROL PLAN 4

PLOT DATE: 15-DEC-2014
DRAWN BY: J. SALVATORI
CHECKED BY: M. MILLER
SHEET 34 OF 166




FLOW OF TRAFFIC
RETROREFLECTIVE PLASTIC DRUM
FLASHING ARROW PANEL
ENERGY ABSORPTION ATTENUATOR
TYPE III BARRICADE
TYPE III (MOD.) BARRICADE
PAVEMENT MARKING REMOVAL

# I-91 NB TRAFFIC CONTROL PLAN 1
## (LEFT LANE CLOSURE)

SCALE 1" = 50'-0"
50 0 50

NOTE TO REVIEWER. THIS SHEET IS FOR ESTIMATING PURPOSES ONLY. CONTRACTOR IS TO FOLLOW THE APPRORIATE T STANDARDS.

PROJECT NAME: HARTFORD
PROJECT NUMBER: IM 091-2(79)

FILE NAME: sl2al32detour91_bdr_north.dgn
PROJECT LEADER: K. HIGGINS
DESIGNED BY: J. SALVATORI
I-91NB TRAFFIC CONTROL PLAN 1
PLOT DATE: 15-DEC-2014
DRAWN BY: J. SALVATORI
CHECKED BY: M. MILLER
SHEET 35 OF 166




FOR ADDITIONAL DETAILS SEE STANDARDS
T-1, T-11, T-12, T-13 AND T-31

# I-91 NB TRAFFIC CONTROL PLAN 2
## (LEFT LANE CLOSURE)

SCALE 1" = 50'-0"
50 0 50

NOTE TO REVIEWER. THIS SHEET IS FOR ESTIMATING PURPOSES ONLY. CONTRACTOR IS TO FOLLOW THE APPRORIATE T STANDARDS.

| | |
|---|---|
| PROJECT NAME: | HARTFORD |
| PROJECT NUMBER: | IM 091-2(79) |
| FILE NAME: sl2al32detour91_bdr_north.dgn | PLOT DATE: 15-DEC-2014 |
| PROJECT LEADER: K. HIGGINS | DRAWN BY: J. SALVATORI |
| DESIGNED BY: J. SALVATORI | CHECKED BY: M. MILLER |
| I-91NB TRAFFIC CONTROL PLAN 2 | SHEET 36 OF 166 |

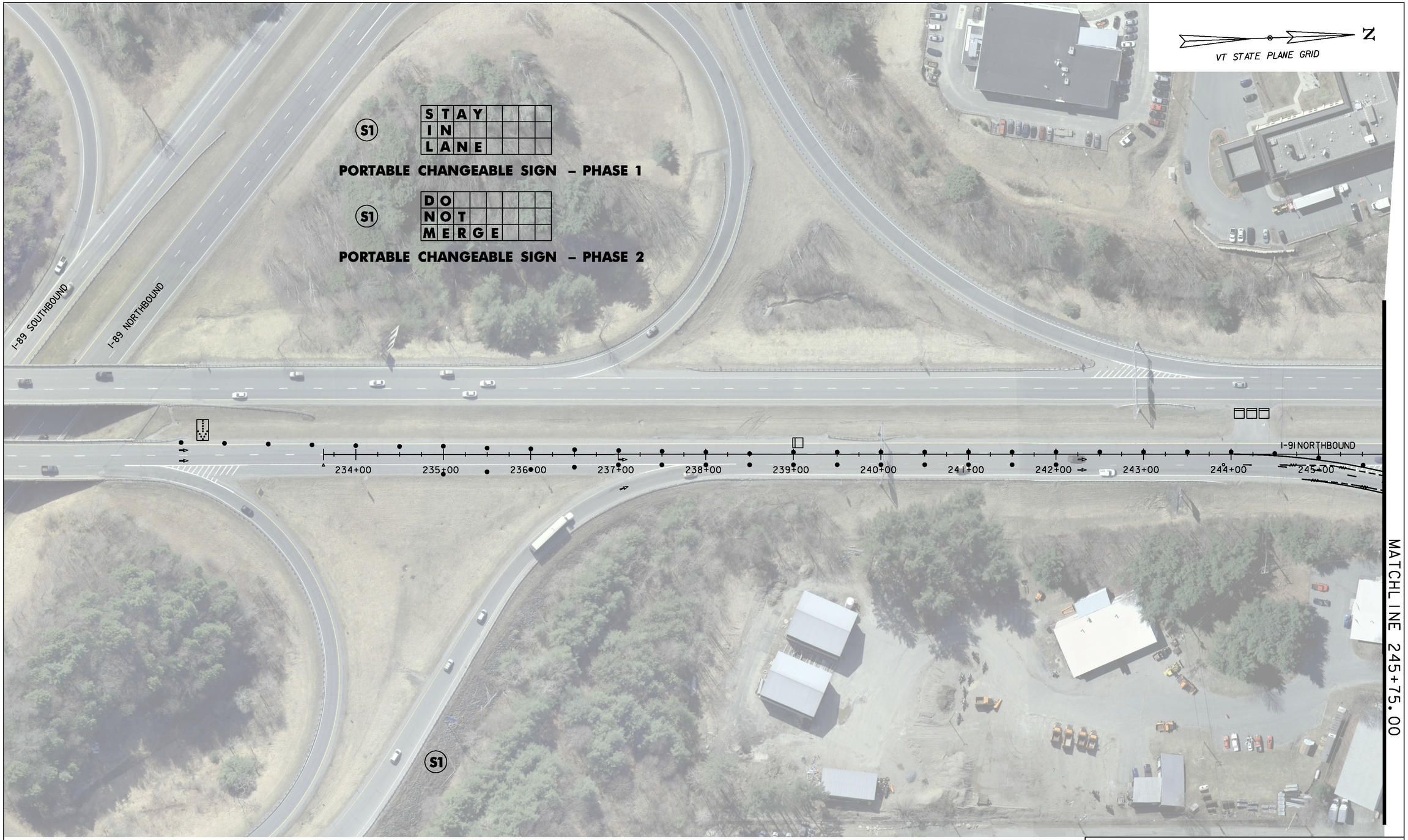


FOR ADDITIONAL DETAILS SEE STANDARDS
T-1, T-20 AND T-28

# I-91 NB TRAFFIC CONTROL PLAN 3
## (DURING BRIDGE CLOSURE)

SCALE 1" = 50'-0"
50 0 50

PROJECT NAME: HARTFORD
PROJECT NUMBER: IM 091-2(79)

FILE NAME: s12a132detour91_bdr_north.dgn
PROJECT LEADER: K. HIGGINS
DESIGNED BY: J. SALVATORI
I-91NB TRAFFIC CONTROL PLAN 3

PLOT DATE: 15-DEC-2014
DRAWN BY: J. SALVATORI
CHECKED BY: M. MILLER
SHEET 37 OF 166

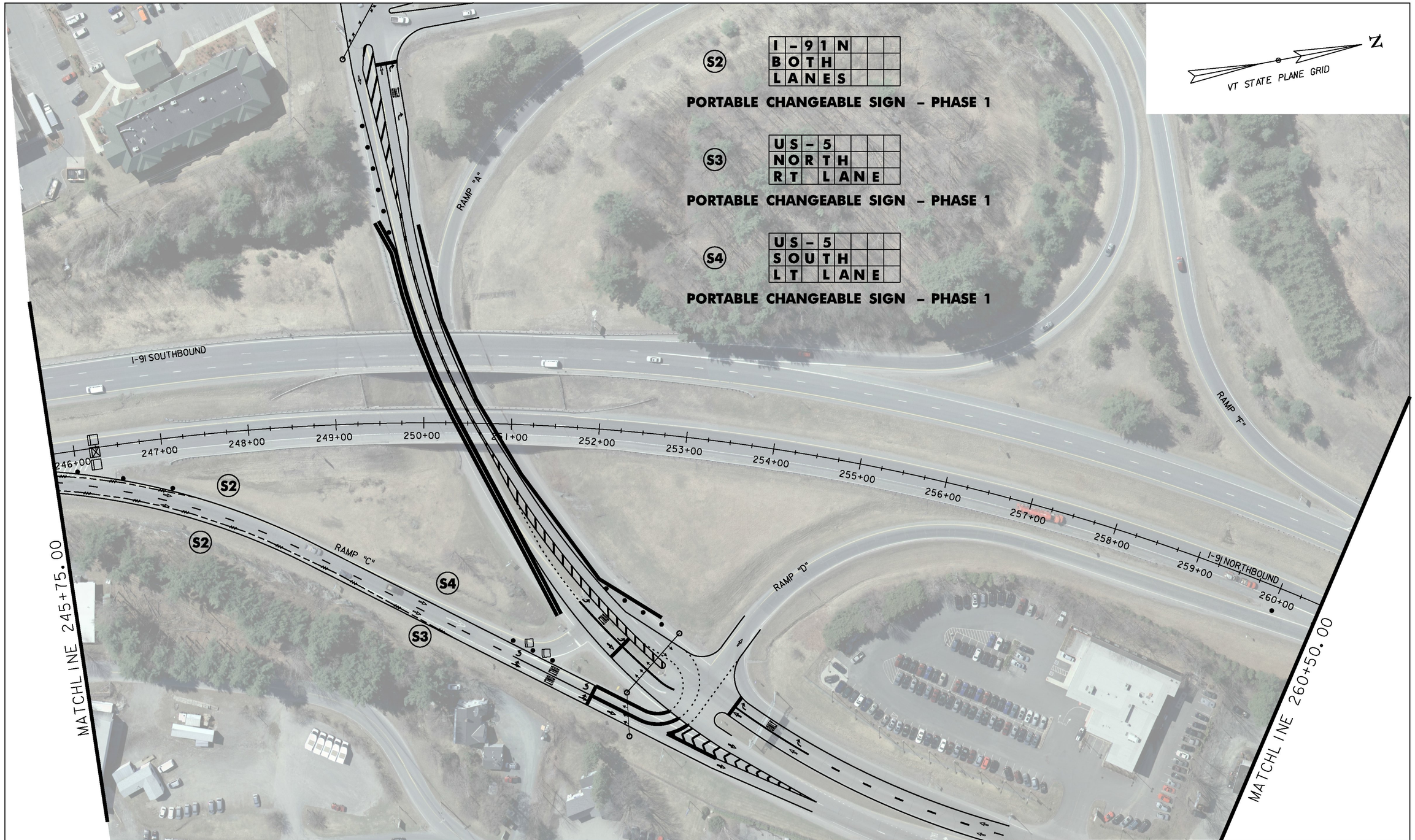


# I-91 NB TRAFFIC CONTROL PLAN 4
## (DURING BRIDGE CLOSURE)

SCALE 1" = 50'-0"

50 0 50

| | |
|---|---|
| PROJECT NAME: | HARTFORD |
| PROJECT NUMBER: | IM 091-2(79) |
| FILE NAME: sl2al32detour91_bdr_north.dgn | PLOT DATE: 15-DEC-2014 |
| PROJECT LEADER: K. HIGGINS | DRAWN BY: J. SALVATORI |
| DESIGNED BY: J. SALVATORI | CHECKED BY: M. MILLER |
| I-91NB TRAFFIC CONTROL PLAN 4 | SHEET 38 OF 166 |




# I-91 NB TRAFFIC CONTROL PLAN 5
## (DURING BRIDGE CLOSURE)

SCALE 1" = 50'-0"
50 0 50

| | |
|---|---|
| PROJECT NAME: | HARTFORD |
| PROJECT NUMBER: | IM 091-2(79) |
| FILE NAME: sl2al32detour91_bdr_north.dgn | PLOT DATE: 15-DEC-2014 |
| PROJECT LEADER: K. HIGGINS | DRAWN BY: J. SALVATORI |
| DESIGNED BY: J. SALVATORI | CHECKED BY: M. MILLER |
| I-91 NB TRAFFIC CONTROL PLAN 5 | SHEET 39 OF 166 |




## RAMP C LAYOUT 1

SCALE 1" = 20'-0"
20 0 20

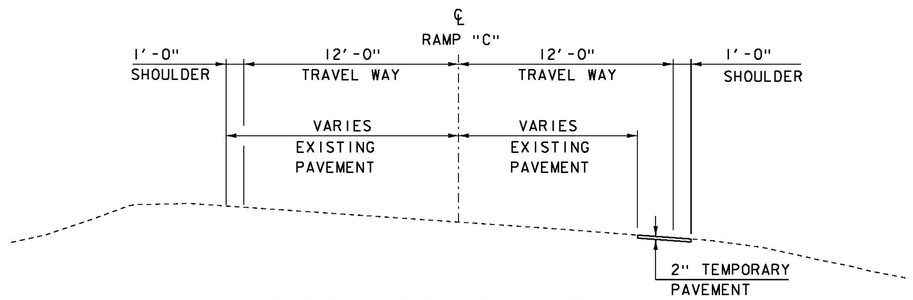


## RAMP C TYPICAL SECTION

SCALE: 1/4" = 1'-0"

AREA OF TEMPORARY EXPANSION

PROJECT NAME: HARTFORD
PROJECT NUMBER: IM 091-2(79)

FILE NAME: sl2al32rampc.dgn
PROJECT LEADER: K. HIGGINS
DESIGNED BY: J. SALVATORI
RAMP C TEMPORARY EXPANSION 1

PLOT DATE: 15-DEC-2014
DRAWN BY: J. SALVATORI
CHECKED BY: ------
SHEET 40 OF 166

MATCHLINE STA 16+50

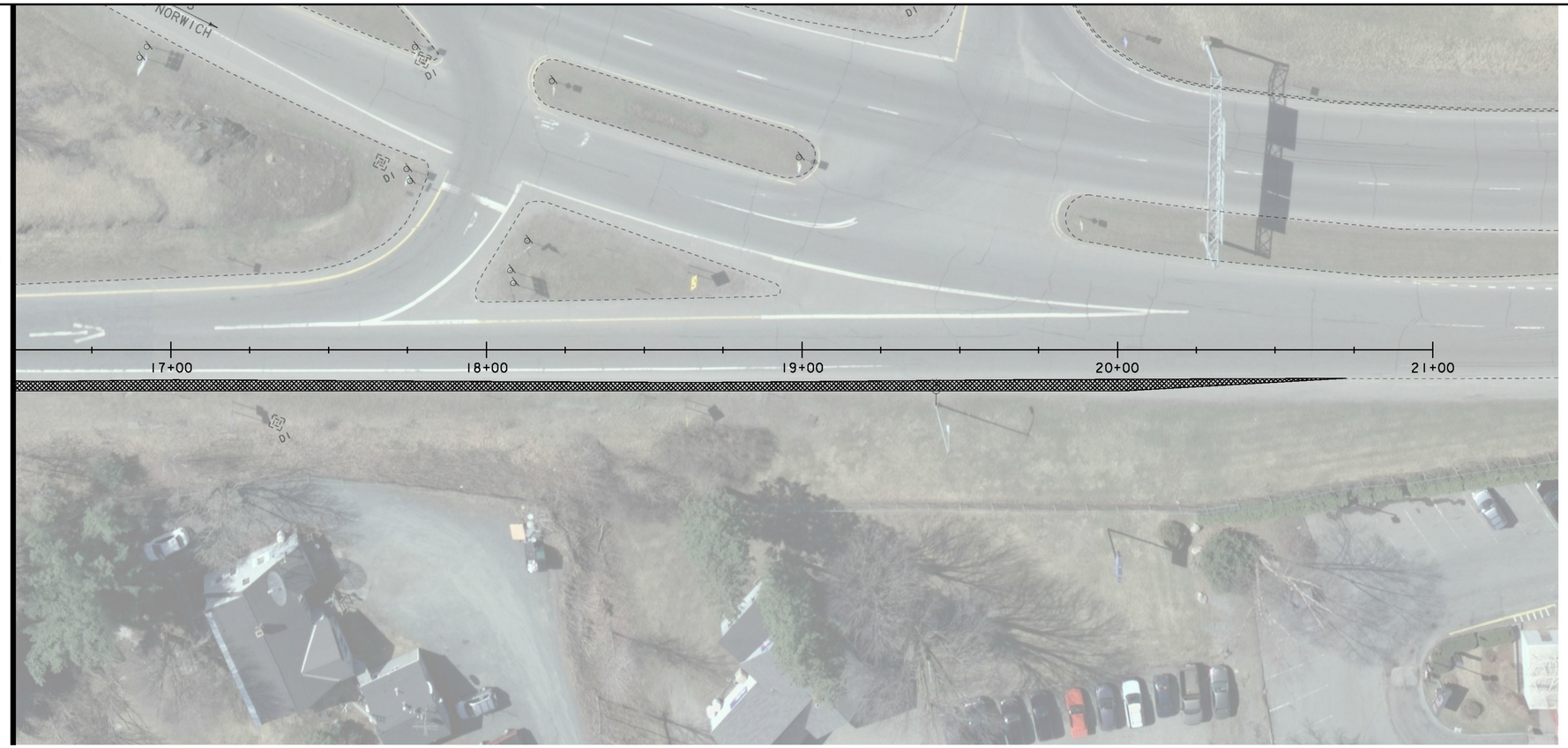


N

VT STATE PLANE GRID

## RAMP C LAYOUT 2

SCALE 1" = 20'-0"
20 0 20

AREA OF TEMPORARY EXPANSION

PROJECT NAME: HARTFORD
PROJECT NUMBER: IM 091-2(79)

FILE NAME: s12a132rampc.dgn
PROJECT LEADER: K. HIGGINS
DESIGNED BY: J. SALVATORI
RAMP C TEMPORARY EXPANSION 2

PLOT DATE: 15-DEC-2014
DRAWN BY: J. SALVATORI
CHECKED BY: ------
SHEET 41 OF 166

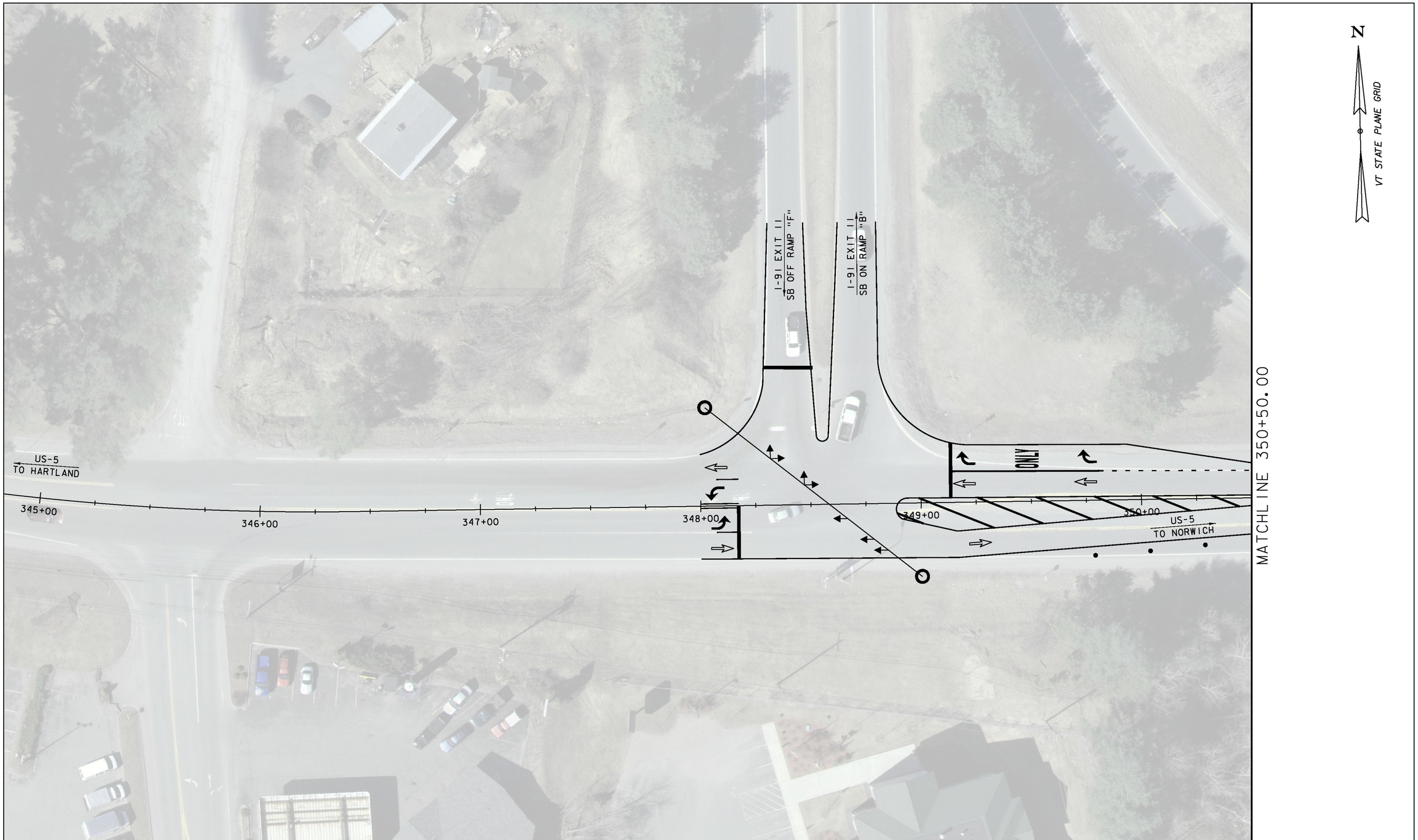


FLOW OF TRAFFIC
RETROREFLECTIVE PLASTIC DRUM
FLASHING ARROW PANEL
TYPE III BARRICADE
TYPE III (MOD.) BARRICADE
PAVEMENT MARKING REMOVAL

# US5 TRAFFIC CONTROL PLAN 1
## (DURING NON-CLOSURE)

SCALE 1" = 20'-0"
20 0 20

PROJECT NAME: HARTFORD
PROJECT NUMBER: IM 091-2(79)

FILE NAME: sl2al32bdr_rte5_tcp.dgn
PROJECT LEADER: K. HIGGINS
DESIGNED BY: J. SALVATORI
US5 TRAFFIC CONTROL PLAN 1

PLOT DATE: 15-DEC-2014
DRAWN BY: J. SALVATORI
CHECKED BY: M. MILLER
SHEET 42 OF 166

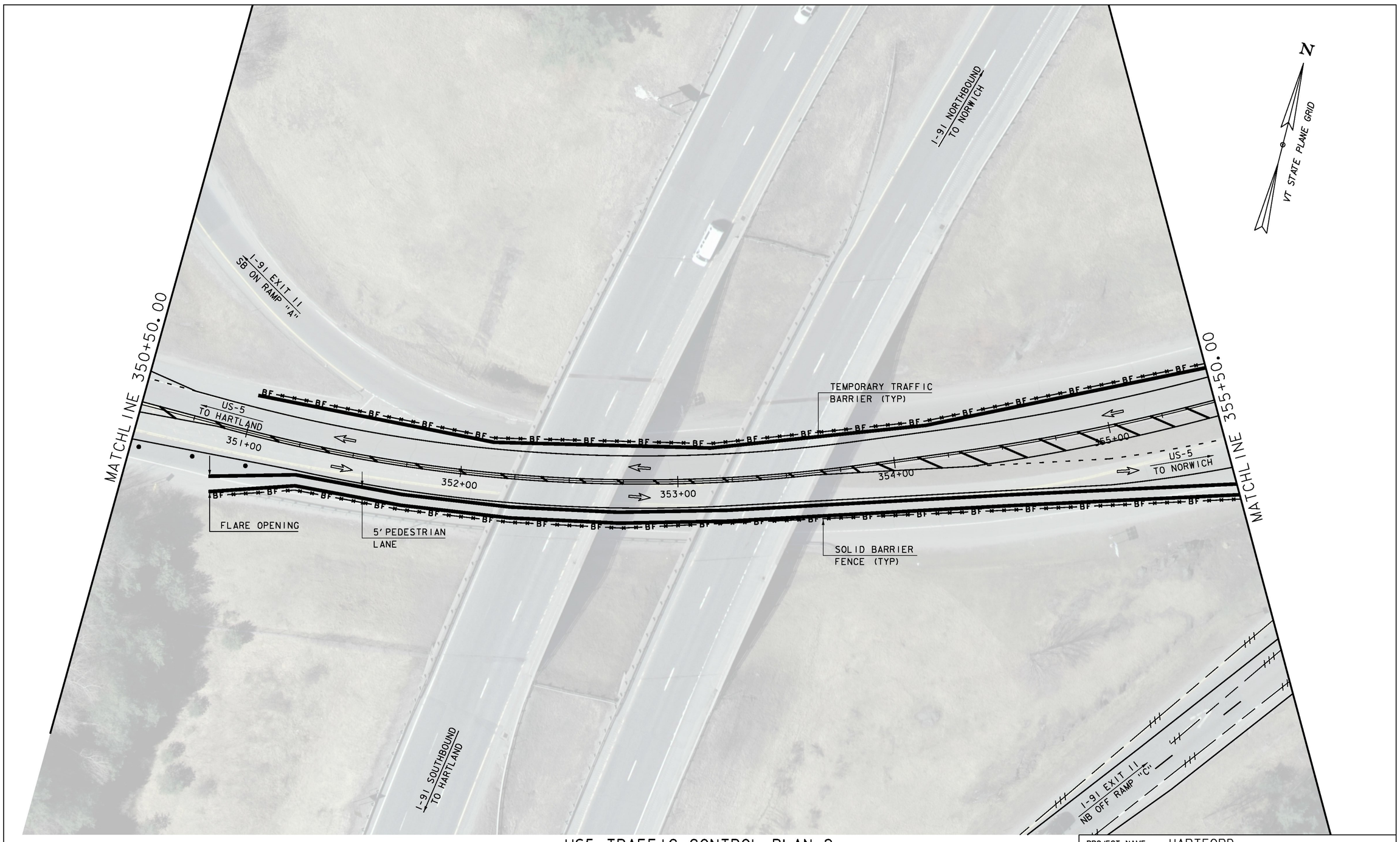


# US5 TRAFFIC CONTROL PLAN 2
## (DURING NON-CLOSURE)

SCALE 1" = 20'-0"
20 0 20

| | |
|---|---|
| PROJECT NAME: | HARTFORD |
| PROJECT NUMBER: | IM 091-2(79) |

| | |
|---|---|
| FILE NAME: sl2al32bdr_rte5_tcp.dgn | PLOT DATE: 15-DEC-2014 |
| PROJECT LEADER: K. HIGGINS | DRAWN BY: J. SALVATORI |
| DESIGNED BY: J. SALVATORI | CHECKED BY: M. MILLER |
| US5 TRAFFIC CONTROL PLAN 2 | SHEET 43 OF 166 |

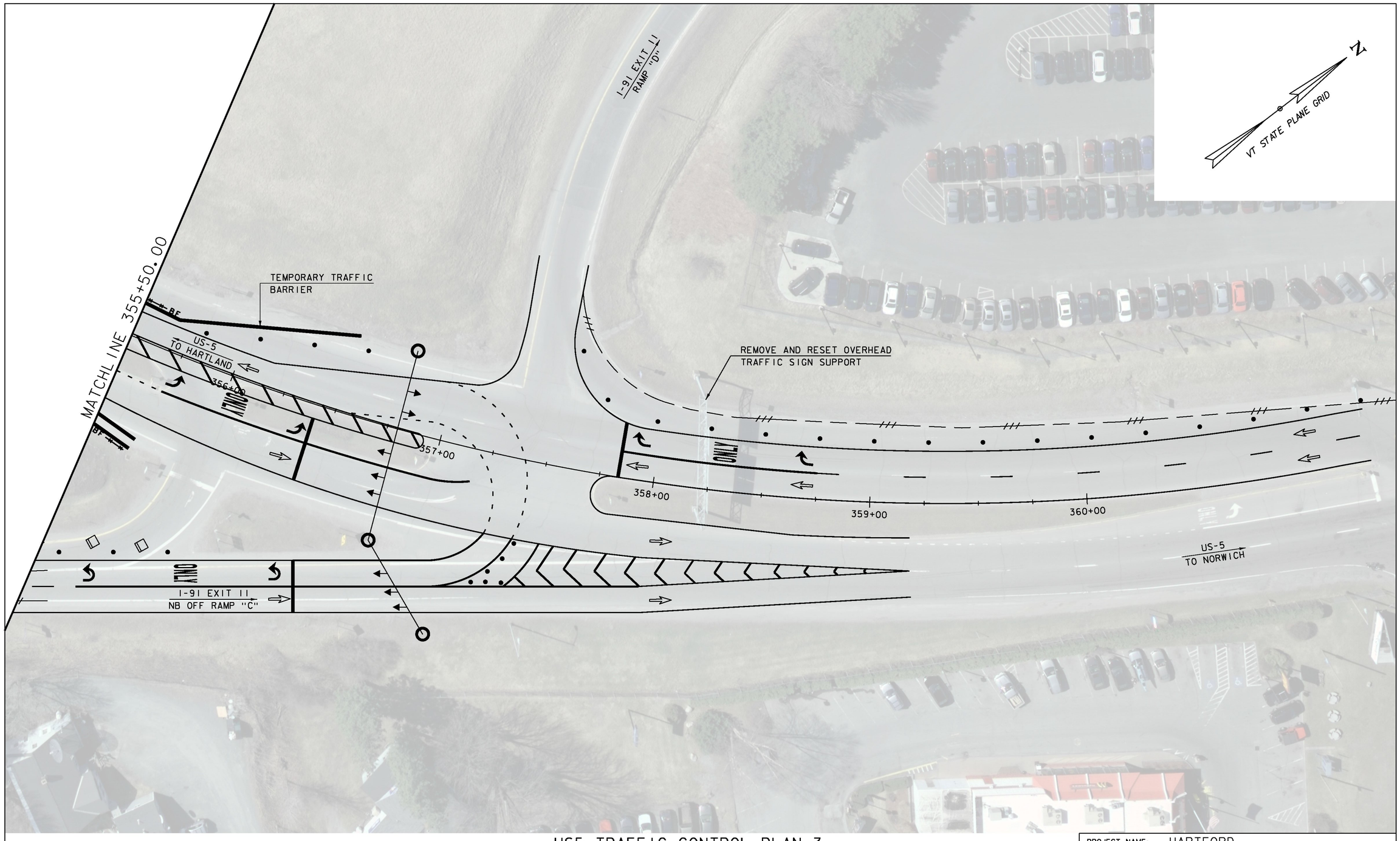


# US5 TRAFFIC CONTROL PLAN 3
## (DURING NON-CLOSURE)

SCALE 1" = 20'-0"
20 0 20

| | |
|---|---|
| PROJECT NAME: | HARTFORD |
| PROJECT NUMBER: | IM 091-2(79) |

| | |
|---|---|
| FILE NAME: sl2al32bdr_rte5_tcp.dgn | PLOT DATE: 15-DEC-2014 |
| PROJECT LEADER: K. HIGGINS | DRAWN BY: J. SALVATORI |
| DESIGNED BY: J. SALVATORI | CHECKED BY: M. MILLER |
| US5 TRAFFIC CONTROL PLAN 3 | SHEET 44 OF 166 |

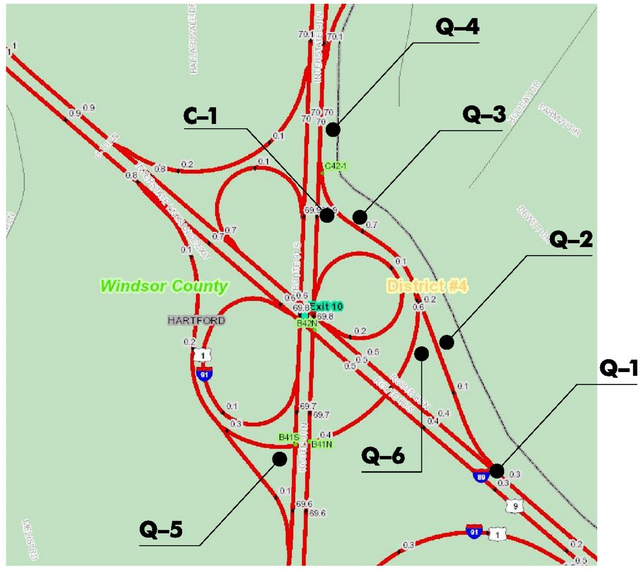


EXIT 10 INSET

NOT TO SCALE

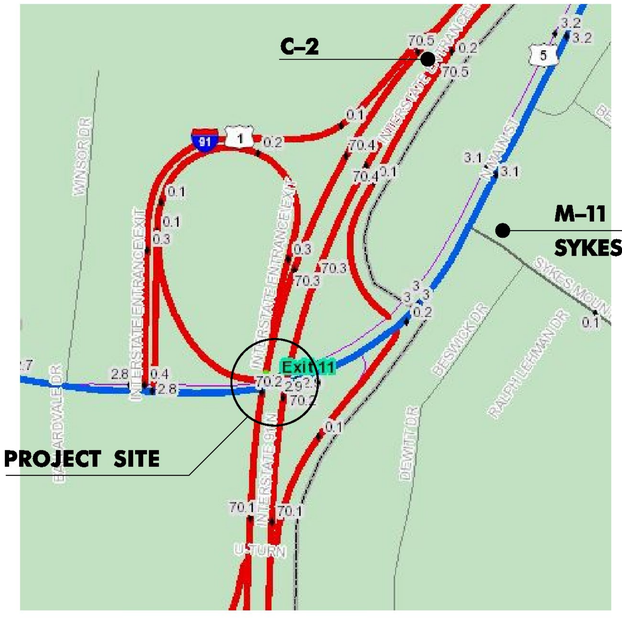


EXIT 11 INSET

NOT TO SCALE

(C) PORTABLE VIDEO TRAILER WITH PAN TILT ZOOM CAMERA (PTZ)

(M) PORTABLE CHANGEABLE MESSAGE SIGN (PCMS)

(Q) PORTABLE QUEUE TRAILER SENSOR (PQT)

SMART WORK ZONE LAYOUT

NOT TO SCALE

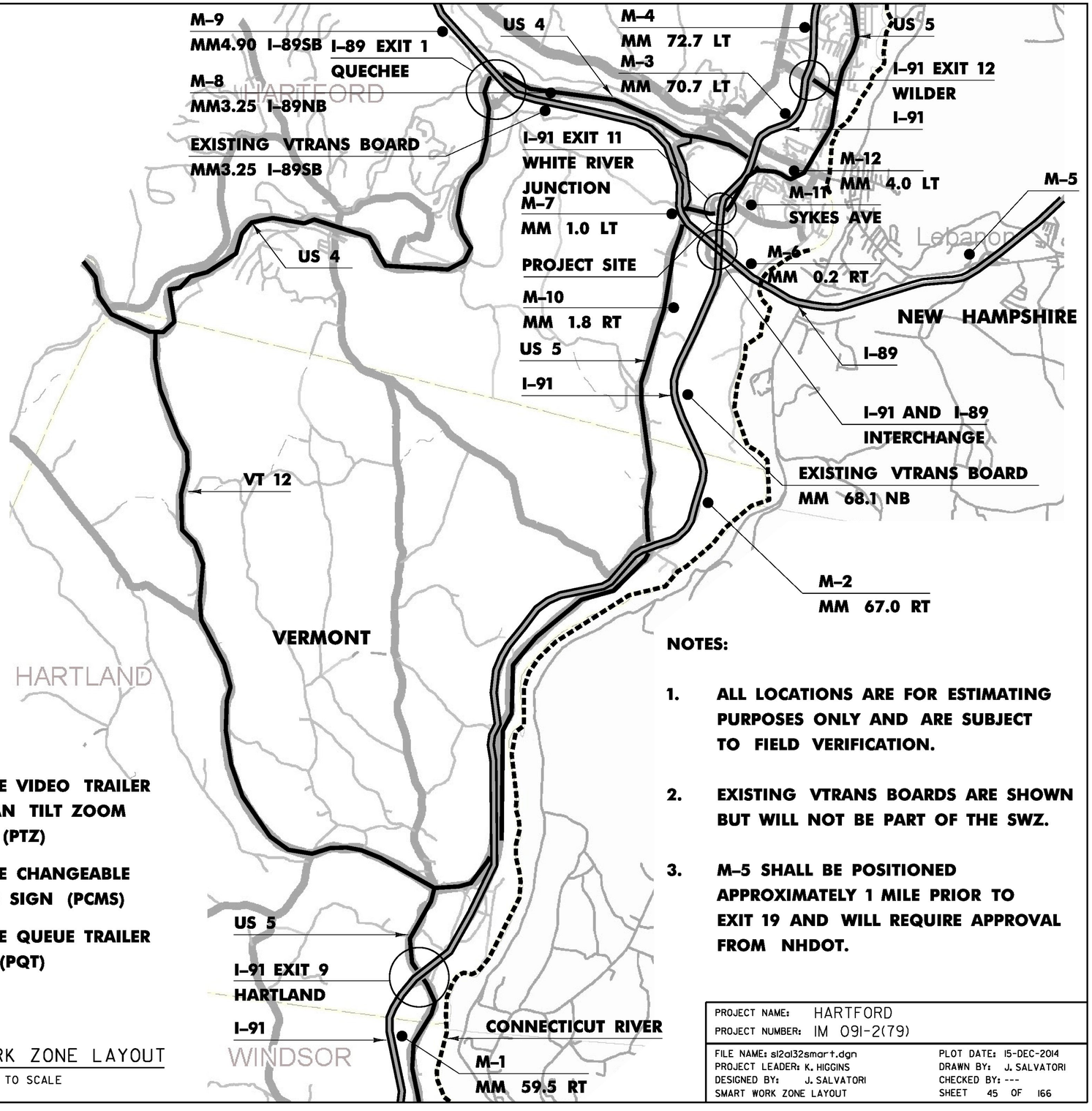


NOTES:

1. ALL LOCATIONS ARE FOR ESTIMATING PURPOSES ONLY AND ARE SUBJECT TO FIELD VERIFICATION.
2. EXISTING VTRANS BOARDS ARE SHOWN BUT WILL NOT BE PART OF THE SWZ.
3. M–5 SHALL BE POSITIONED APPROXIMATELY 1 MILE PRIOR TO EXIT 19 AND WILL REQUIRE APPROVAL FROM NHDOT.

| | |
|---|---|
| PROJECT NAME: | HARTFORD |
| PROJECT NUMBER: | IM 091-2(79) |
| FILE NAME: sl2al32smart.dgn | PLOT DATE: 15-DEC-2014 |
| PROJECT LEADER: K. HIGGINS | DRAWN BY: J. SALVATORI |
| DESIGNED BY: J. SALVATORI | CHECKED BY: --- |
| SMART WORK ZONE LAYOUT | SHEET 45 OF 166 |

## MESSAGE 1

| | | | | | | | |
|---|---|---|---|---|---|---|---|
| W | O | R | K | | | | |
| Z | O | N | E | | | | |
| A | H | E | A | D | | | |

PHASE I

| | | | | | | | |
|---|---|---|---|---|---|---|---|
| E | X | P | E | C | T | | |
| D | E | L | A | Y | S | | |
| | | | | | | | |

PHASE II

MESSAGE SHALL BE SET AS DEFAULT MESSAGE AND SHALL BE DISPLAYED DURING WORK HOURS.

## MESSAGE 2

| | | | | | | | |
|---|---|---|---|---|---|---|---|
| C | R | A | S | H | | | |
| A | H | E | A | D | | | |
| | | | | | | | |

PHASE I

| | | | | | | | |
|---|---|---|---|---|---|---|---|
| B | E | | | | | | |
| P | R | E | P | A | R | E | D |
| T | O | | S | T | O | P | |

PHASE II

MESSAGE SHALL BE DISPLAYED ON PCMS WHENEVER THERE IS A VEHICULAR CRASH WITHIN THE PROJECT LIMITS.

## MESSAGE 3

| | | | | | | | |
|---|---|---|---|---|---|---|---|
| U | S | E | | I | - | 8 | 9 |
| E | X | I | T | | 1 | | |
| W | O | O | D | S | T | C | K |

PHASE I

| | | | | | | | |
|---|---|---|---|---|---|---|---|
| F | O | R | | A | L | T | |
| R | O | U | T | E | | | |
| T | O | | I | - | 9 | 1 | N |

PHASE II

MESSAGE SHALL BE DISPLAYED ON I-89 NORTHBOUND PCMS (M-5 & M-6) WHENEVER TRAFFIC IS QUEUED AT INTERCHANGE ONTO I-89.

## MESSAGE 4

| | | | | | | | |
|---|---|---|---|---|---|---|---|
| N | O | | | L | E | F | T |
| T | U | R | N | | | | |
| | | | | | | | |

PHASE I

MESSAGE SHALL BE DISPLAYED ON SYKES AVE PCMS (M-11) WHENEVER TRAFFIC DELAYED ON ROUTE 5.

| | |
|---|---|
| PROJECT NAME: | HARTFORD |
| PROJECT NUMBER: | IM 091-2(79) |
| FILE NAME: sl2al32smart.dgn | PLOT DATE: 15-DEC-2014 |
| PROJECT LEADER: K. HIGGINS | DRAWN BY: J. SALVATORI |
| DESIGNED BY: J. SALVATORI | CHECKED BY: --- |
| SMART WORK ZONE DETAILS | SHEET 46 OF 166 |

## LIST OF MAJOR EQUIPMENT

| EQUIPMENT ITEM 678.40 | QUANTITY |
|---|---|
| POWER METER ON STANCHION | 1 |
| BREAKER PANEL ON STANCHION | 1 |
| TRAFFIC SIGNAL CONTROLLER (NEMA TS2) | 1 |
| NEMA POLE MOUNTED CONTROLLER CABINET WITH ANCILLARY CONTROL EQUIPMENT | 1 |
| WESTERN RED CEDAR OR SOUTHERN PINE WOODEN STRAIN POLE | 2 |
| ONE WAY, 3-SECTION, 12-INCH POLYCARBONATE LED TRAFFIC SIGNAL HEAD WITH TUNNEL VISORS AND 5" LOUVERED BACK-PLATES | 6 |
| ONE WAY, 4-SECTION, 12-INCH POLYCARBONATE LED TRAFFIC SIGNAL HEAD WITH TUNNEL VISORS AND 5" LOUVERED BACK-PLATES | 1 |
| SPECIAL PROVISION, (GPS TIME CLOCK) | 1 |
| STOP BAR DETECTOR | 3 |

## CONTROLLER TIMING CHART

| US ROUTE 5 & SOUTHBOUND RAMPS | | | | | | | | |
|---|---|---|---|---|---|---|---|---|
| | 5NL | 5ST | | 91S | | 5NT | | |
| PHASE | 1 | 2 | 3 | 4 | 5 | 6 | 7 | 8 |
| TRAFFIC MOVEMENT | ↗ | ← | | ↙↘ | | → | | |
| MINIMUM GREEN | 5 | 10 | | 7 | | 10 | | |
| MAXIMUM 1 GREEN | 15 | 45 | | 20 | | 45 | | |
| MAXIMUM 2 GREEN | 30 | 50 | | 20 | | 50 | | |
| MAXIMUM 3 GREEN | 25 | 40 | | 60 | | 40 | | |
| YELLOW CLEARANCE | 4.0 | 4.0 | | 4.0 | | 4.0 | | |
| ALL RED CLEARANCE | 2.0 | 2.0 | | 2.0 | | 2.0 | | |
| VEH. EXTENSION | 3.0 | 3.0 | | 3.0 | | 3.0 | | |
| RECALL MODE | OFF | MIN | | OFF | | MIN | | |

NOTES:

1) CONTROLLER SHALL BE INITIALLY PROGRAMMED AND FINE-TUNED BASED ON PREVAILING FIELD CONDITIONS FOR MAXIMUM 1, MAXIMUM 2, AND COORDINATOR PROGRAMMING BY TIME-OF-DAY DURING NON-CLOSURE.

2 CONTROLLER SHALL BE INITIALLY PROGRAMMED AND FINE-TUNED BASED ON PREVAILING FIELD CONDITIONS FOR MAXIMUM 3 PROGRAMMING 24 / 7 DURING CLOSURE.

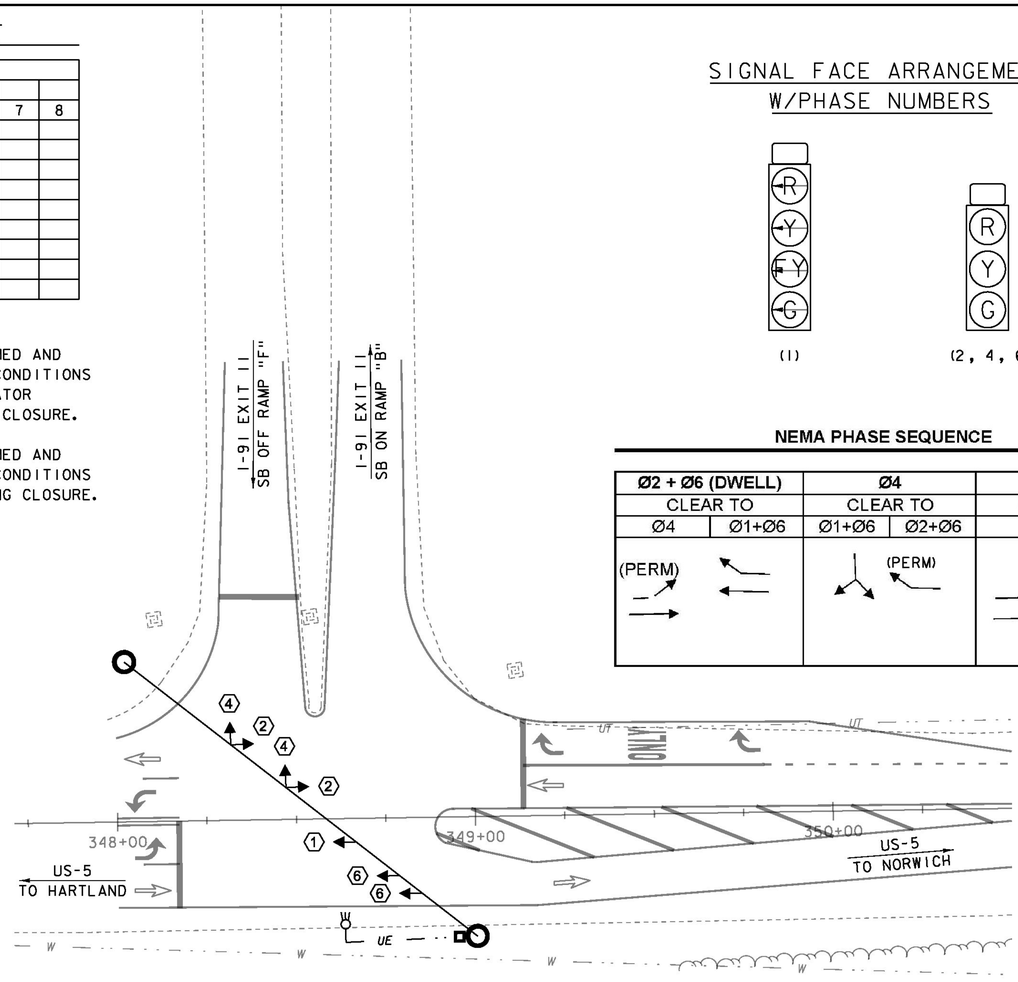


## SIGNAL FACE ARRANGEMENT W/PHASE NUMBERS




N

VT STATE PLANE GRID

## NEMA PHASE SEQUENCE

| Ø2 + Ø6 (DWELL) | | Ø4 | | Ø1 + Ø6 |
|---|---|---|---|---|
| CLEAR TO | | CLEAR TO | | CLEAR TO |
| Ø4 | Ø1+Ø6 | Ø1+Ø6 | Ø2+Ø6 | Ø2+Ø6 |
| (PERM) | | | (PERM) | |

**US 5/SB RAMPS** — **NIC/TOD STEP PROGRAMMING PERIODS OF OPERATION (NON-CLOSURE)**

| WEEK PROG | DAY OF WEEK SUN | MON | TUE | WED | THU | FRI | SAT |
|---|---|---|---|---|---|---|---|
| WEEK 1 | 5 | 6 | 6 | 6 | 6 | 6 | 5 |

| STEP | PROGRAM | TIME | C/O/S | FL | MAX 2 | MAX 3 |
|---|---|---|---|---|---|---|
| 1 | 5 | 0:00 | 0/0/1 | | | |
| 2 | 5 | 6:00 | 0/0/1 | | X | |
| 3 | 5 | 10:00 | 2/1/1 | | | |
| 4 | 5 | 17:00 | 0/0/1 | | X | |
| 5 | 6 | 0:00 | 0/0/1 | | | |
| 6 | 6 | 6:00 | 1/1/1 | | | |
| 7 | 6 | 9:00 | 2/1/1 | | | |
| 8 | 6 | 16:00 | 3/1/1 | | | |
| 9 | 6 | 18:00 | 0/0/1 | | X | |

**COORDINATOR C/O/S PROGRAMMING DATA**

| | C/O/S 1/1/1 | | C/O/S 2/1/1 | | C/O/S 3/1/1 | |
|---|---|---|---|---|---|---|
| CYCLE LENGTH | 80 | | 80 | | 110 | |
| | SECS | % | SECS | % | SECS | % |
| OFFSET (Begin Green) | 0 | 0% | 13 | 16% | 24 | 22% |
| SPLIT TIME Φ1 | 21 | 26% | 21 | 26% | 36 | 33% |
| SPLIT TIME Φ2 | 33 | 41% | 36 | 45% | 53 | 48% |
| SPLIT TIME Φ3 | 0 | 0% | 0 | 0% | 0 | 0% |
| SPLIT TIME Φ4 | 26 | 33% | 23 | 29% | 21 | 19% |
| SPLIT TIME Φ5 | 0 | 0% | 0 | 0% | 0 | 0% |
| SPLIT TIME Φ6 | 54 | 68% | 57 | 71% | 89 | 81% |
| SPLIT TIME Φ7 | 0 | 0% | 0 | 0% | 0 | 0% |
| SPLIT TIME Φ8 | 0 | 0% | 0 | 0% | 0 | 0% |

COORDINATION NOTES:

1. OFFSET IS REFERENCED TO THE BEGINNING OF THE COORDINATED (Φ2+Φ6) PHASE GREEN.
2. FORCE OFFS SHALL BE SET TO FIXED.

**US 5/SB RAMPS** — **NIC/TOD STEP PROGRAMMING PERIODS OF OPERATION (CLOSURE)**

| WEEK PROG | DAY OF WEEK SUN | MON | TUE | WED | THU | FRI | SAT |
|---|---|---|---|---|---|---|---|
| CLOSURER WEEK 2 | 2 | 2 | 2 | 2 | 2 | 2 | 2 |

| STEP | PROGRAM | TIME | C/O/S | FL | MAX 2 | MAX 3 |
|---|---|---|---|---|---|---|
| 10 | 2 | 0:00 | 0/0/1 | | | X |

## LEGEND

- CONTROLLER CABINET
- EXISTING STREET LIGHT
- SIGNAL HEAD AND PHASE NUMBER
- STRAIN POLE
- UE — UNDERGROUND ELECTRICAL CONDUIT

## US5 TEMPORARY TRAFFIC SIGNAL PLAN 1

SCALE 1" = 20'-0"
20 0 20

PROJECT NAME: HARTFORD
PROJECT NUMBER: IM 091-2(79)

FILE NAME: sl2al32bdr_rte5_sig.dgn
PROJECT LEADER: K. HIGGINS
DESIGNED BY: J. SALVATORI
US5 TEMPORARY TRAFFIC SIGNAL PLAN 1

PLOT DATE: 15-DEC-2014
DRAWN BY: J. SALVATORI
CHECKED BY: I. DEGUTIS
SHEET 47 OF 166

**US 5/NB RAMPS**

**NIC/TOD STEP PROGRAMMING PERIODS OF OPERATION (NON-CLOSURE)**

| WEEK PROG | DAY OF WEEK SUN | MON | TUE | WED | THU | FRI | SAT |
|---|---|---|---|---|---|---|---|
| WEEK 1 | 5 | 6 | 6 | 6 | 6 | 6 | 5 |

| STEP | PROGRAM | TIME | C/O/S | FL | MAX 2 | MAX 3 |
|---|---|---|---|---|---|---|
| 1 | 5 | 0:00 | 0/0/1 | | | |
| 2 | 5 | 6:00 | 0/0/1 | | X | |
| 3 | 5 | 10:00 | 2/1/1 | | | |
| 4 | 5 | 17:00 | 0/0/1 | | X | |
| 5 | 6 | 0:00 | 0/0/1 | | | |
| 6 | 6 | 6:00 | 1/1/1 | | | |
| 7 | 6 | 9:00 | 2/1/1 | | | |
| 8 | 6 | 16:00 | 3/1/1 | | | |
| 9 | 6 | 18:00 | 0/0/1 | | X | |

**COORDINATOR C/O/S PROGRAMMING DATA**

| | C/O/S 1/1/1 | | C/O/S 2/1/1 | | C/O/S 3/1/1 | |
|---|---|---|---|---|---|---|
| CYCLE LENGTH | 80 | | 80 | | 110 | |
| | SECS | % | SECS | % | SECS | % |
| OFFSET (Begin Green) | 23 | 29% | 22 | 28% | 24 | 22% |
| SPLIT TIME Φ1 | 15 | 19% | 16 | 20% | 18 | 16% |
| SPLIT TIME Φ2 | 28 | 35% | 34 | 43% | 55 | 50% |
| SPLIT TIME Φ3 | 37 | 46% | 30 | 38% | 37 | 34% |
| SPLIT TIME Φ4 | 0 | 0% | 0 | 0% | 0 | 0% |
| SPLIT TIME Φ5 | 0 | 0% | 0 | 0% | 0 | 0% |
| SPLIT TIME Φ6 | 43 | 54% | 50 | 63% | 73 | 66% |
| SPLIT TIME Φ7 | 0 | 0% | 0 | 0% | 0 | 0% |
| SPLIT TIME Φ8 | 0 | 0% | 0 | 0% | 0 | 0% |

COORDINATION NOTES:

1. OFFSET IS REFERENCED TO THE BEGINNING OF THE COORDINATED (Φ2+Φ6) PHASE GREEN.
2. FORCE OFFS SHALL BE SET TO FIXED.

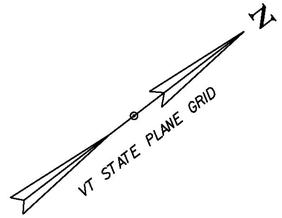


**US 5/NB RAMPS**

**NIC/TOD STEP PROGRAMMING PERIODS OF OPERATION (CLOSURE)**

| WEEK PROG | DAY OF WEEK SUN | MON | TUE | WED | THU | FRI | SAT |
|---|---|---|---|---|---|---|---|
| CLOSURER WEEK 2 | 2 | 2 | 2 | 2 | 2 | 2 | 2 |

| STEP | PROGRAM | TIME | C/O/S | FL | MAX 2 | MAX 3 |
|---|---|---|---|---|---|---|
| 10 | 2 | 0:00 | 0/0/1 | | | X |

**NEMA PHASE SEQUENCE**

| Ø2 + Ø6 (DWELL) | | Ø3 | | Ø1 + Ø6 |
|---|---|---|---|---|
| CLEAR TO | | CLEAR TO | | CLEAR TO |
| Ø3 | Ø1+Ø6 | Ø1+Ø6 | Ø2+Ø6 | Ø2+Ø6 |
| (PERM) | | | | |

## LIST OF MAJOR EQUIPMENT

| EQUIPMENT ITEM 678.40 | QUANTITY |
|---|---|
| POWER METER ON STANCHION | 1 |
| BREAKER PANEL ON STANCHION | 1 |
| TRAFFIC SIGNAL CONTROLLER (NEMA TS2) | 1 |
| NEMA POLE MOUNTED CONTROLLER CABINET WITH ANCILLARY CONTROL EQUIPMENT | 1 |
| WESTERN RED CEDAR OR SOUTHERN PINE WOODEN STRAIN POLE | 3 |
| ONE WAY, 3-SECTION, 12-INCH POLYCARBONATE LED TRAFFIC SIGNAL HEAD WITH TUNNEL VISORS AND 5" LOUVERED BACK-PLATES | 7 |
| ONE WAY, 4-SECTION, 12-INCH POLYCARBONATE LED TRAFFIC SIGNAL HEAD WITH TUNNEL VISORS AND 5" LOUVERED BACK-PLATES | 1 |
| SPECIAL PROVISION, (GPS TIME CLOCK) | 1 |
| STOP BAR DETECTOR | 3 |

## CONTROLLER TIMING CHART

| US ROUTE 5 & NORTHBOUND RAMPS | | | | | | | | |
|---|---|---|---|---|---|---|---|---|
| | 5NL | 5ST | 9IN | 9IN | | 5NT | | |
| PHASE | 1 | 2 | 3 | 3A | | 6 | 7 | 8 |
| TRAFFIC MOVEMENT | ↗ | ← | ↖ | → | | → | | |
| MINIMUM GREEN | 5 | 10 | 10 | 10 | | 10 | | |
| MAXIMUM 1 GREEN | 10 | 40 | 30 | 30 | | 40 | | |
| MAXIMUM 2 GREEN | 15 | 50 | 35 | 35 | | 50 | | |
| MAXIMUM 3 GREEN | 15 | 40 | 60 | 60 | | 40 | | |
| YELLOW CLEARANCE | 4.0 | 4.0 | 4.0 | 4.0 | | 4.0 | | |
| ALL RED CLEARANCE | 2.0 | 2.0 | 2.0 | 2.0 | | 2.0 | | |
| VEH. EXTENSION | 3.0 | 3.0 | 3.0 | 3.0 | | 3.0 | | |
| RECALL MODE | OFF | MIN | OFF | OFF | | MIN | | |

NOTES:

1) CONTROLLER SHALL BE INITIALLY PROGRAMMED AND FINE-TUNED BASED ON PREVAILING FIELD CONDITIONS FOR MAXIMUM 1, MAXIMUM 2, AND COORDINATOR PROGRAMMING BY TIME-OF-DAY DURING NON-CLOSURE.

2) CONTROLLER SHALL BE INITIALLY PROGRAMMED AND FINE-TUNED BASED ON PREVAILING FIELD CONDITIONS FOR MAXIMUM 3 PROGRAMMING 24 / 7 DURING CLOSURE.

## SIGNAL FACE ARRANGEMENT W/PHASE NUMBERS

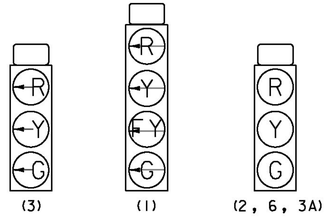


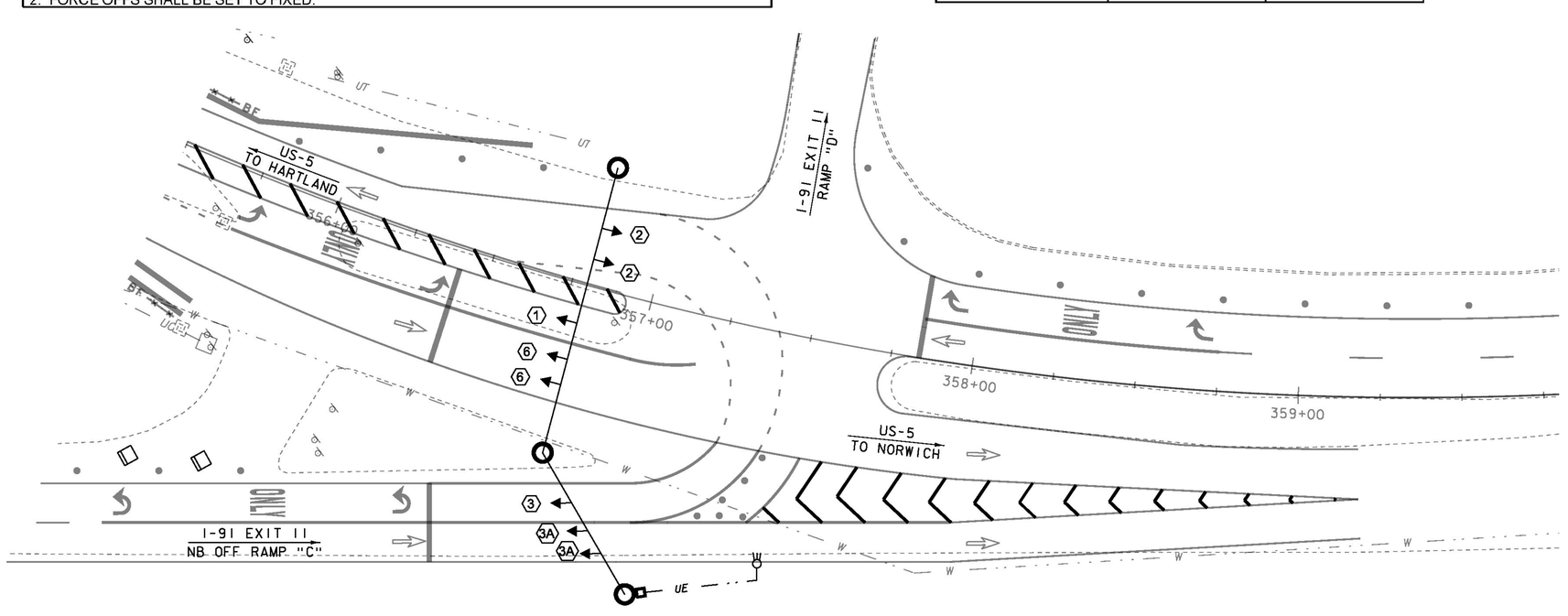


## US5 TEMPORARY TRAFFIC SIGNAL PLAN 2

SCALE 1" = 20'-0"

20 0 20

| | |
|---|---|
| PROJECT NAME: | HARTFORD |
| PROJECT NUMBER: | IM 091-2(79) |
| FILE NAME: sl2al32bdr_rte5_sig.dgn | PLOT DATE: 15-DEC-2014 |
| PROJECT LEADER: K. HIGGINS | DRAWN BY: J. SALVATORI |
| DESIGNED BY: J. SALVATORI | CHECKED BY: I. DEGUTIS |
| US5 TEMPORARY TRAFFIC SIGNAL PLAN 2 | SHEET 48 OF 166 |

## US 5/SYKES AVE — NIC/TOD STEP PROGRAMMING PERIODS OF OPERATION (NON-CLOSURE)

| WEEK PROG | DAY OF WEEK SUN | MON | TUE | WED | THU | FRI | SAT |
|---|---|---|---|---|---|---|---|
| WEEK 4 | 5 | 6 | 6 | 6 | 6 | 6 | 5 |

| STEP | PROGRAM | TIME | C/O/S | FL | MAX 2 | MAX 3 |
|---|---|---|---|---|---|---|
| 18 | 5 | 0:00 | 0/0/1 | X | | |
| 19 | 5 | 6:00 | 0/0/1 | | X | |
| 20 | 5 | 10:00 | 2/1/1 | | | |
| 21 | 5 | 17:00 | 0/0/1 | | X | |
| 22 | 6 | 0:00 | 0/0/1 | X | | |
| 23 | 6 | 6:00 | 1/1/1 | | | |
| 24 | 6 | 9:00 | 2/1/1 | | | |
| 25 | 6 | 16:00 | 3/1/1 | | | |
| 26 | 6 | 18:00 | 0/0/1 | | X | |

### COORDINATOR C/O/S PROGRAMMING DATA

| | C/O/S 1/1/1 | | C/O/S 2/1/1 | | C/O/S 3/1/1 | |
|---|---|---|---|---|---|---|
| CYCLE LENGTH | 80 | | 80 | | 110 | |
| | SECS | % | SECS | % | SECS | % |
| OFFSET (Begin Green) | 0 | 0% | 0 | 0% | 0 | 0% |
| SPLIT TIME Φ1 | 13 | 16% | 13 | 16% | 16 | 15% |
| SPLIT TIME Φ2 | 39 | 49% | 36 | 45% | 44 | 40% |
| SPLIT TIME Φ3 | 0 | 0% | 0 | 0% | 0 | 0% |
| SPLIT TIME Φ4 | 28 | 35% | 31 | 39% | 50 | 45% |
| SPLIT TIME Φ5 | 21 | 26% | 21 | 26% | 26 | 24% |
| SPLIT TIME Φ6 | 31 | 39% | 28 | 35% | 34 | 31% |
| SPLIT TIME Φ7 | 0 | 0% | 0 | 0% | 0 | 0% |
| SPLIT TIME Φ8 | 28 | 35% | 31 | 39% | 50 | 45% |

COORDINATION NOTES:

1. OFFSET IS REFERENCED TO THE BEGINNING OF THE COORDINATED (Φ2+Φ6) PHASE GREEN.
2. FORCE OFFS SHALL BE SET TO FIXED.

## US 5/SYKES AVE — EXISTING NIC/TOD STEP PROGRAMMING PERIODS OF OPERATION (CLOSURE)

| WEEK PROG | DAY OF WEEK SUN | MON | TUE | WED | THU | FRI | SAT |
|---|---|---|---|---|---|---|---|
| CLOSURER WEEK 3 | 2 | 4 | 4 | 4 | 4 | 4 | 2 |

| STEP | PROGRAM | TIME | C/O/S | FL | MAX 2 | MAX 3 |
|---|---|---|---|---|---|---|
| 1 | 1 | 0:00 | 0/0/1 | X | | |
| 2 | 1 | 6:00 | 0/0/1 | | | |
| 3 | 1 | 9:00 | 0/0/1 | | X | |
| 4 | 1 | 15:00 | 0/0/1 | | | X |
| 5 | 1 | 18:00 | 0/0/1 | | X | |
| 6 | 2 | 0:00 | 0/0/1 | X | | |
| 7 | 2 | 6:00 | 0/0/1 | | X | |
| 8 | 3 | 5:00 | 0/0/1 | | | |
| 9 | 3 | 8:00 | 0/0/1 | | X | |
| 10 | 3 | 14:00 | 0/0/1 | | | X |
| 11 | 3 | 17:00 | 0/0/1 | | X | |
| 12 | 3 | 23:00 | 0/0/1 | X | | |
| 13 | 4 | 1:00 | 0/0/1 | X | | |
| 14 | 4 | 6:00 | 0/0/1 | | | |
| 15 | 4 | 10:00 | 0/0/1 | | X | |
| 16 | 4 | 16:00 | 0/0/1 | | | X |
| 17 | 4 | 19:00 | 0/0/1 | | X | |

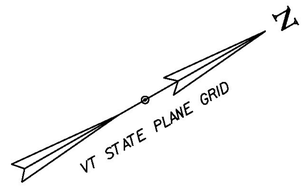


### NEMA PHASE SEQUENCE

| Ø2 + Ø6 (DWELL) | | Ø4 + Ø8 | | Ø1 + Ø5 |
|---|---|---|---|---|
| CLEAR TO | | CLEAR TO | | CLEAR TO |
| Ø4+Ø8 | Ø1+Ø5 | Ø1+Ø5 | Ø2+Ø6 | Ø2+Ø6 |

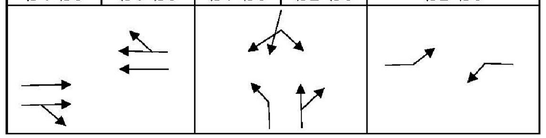

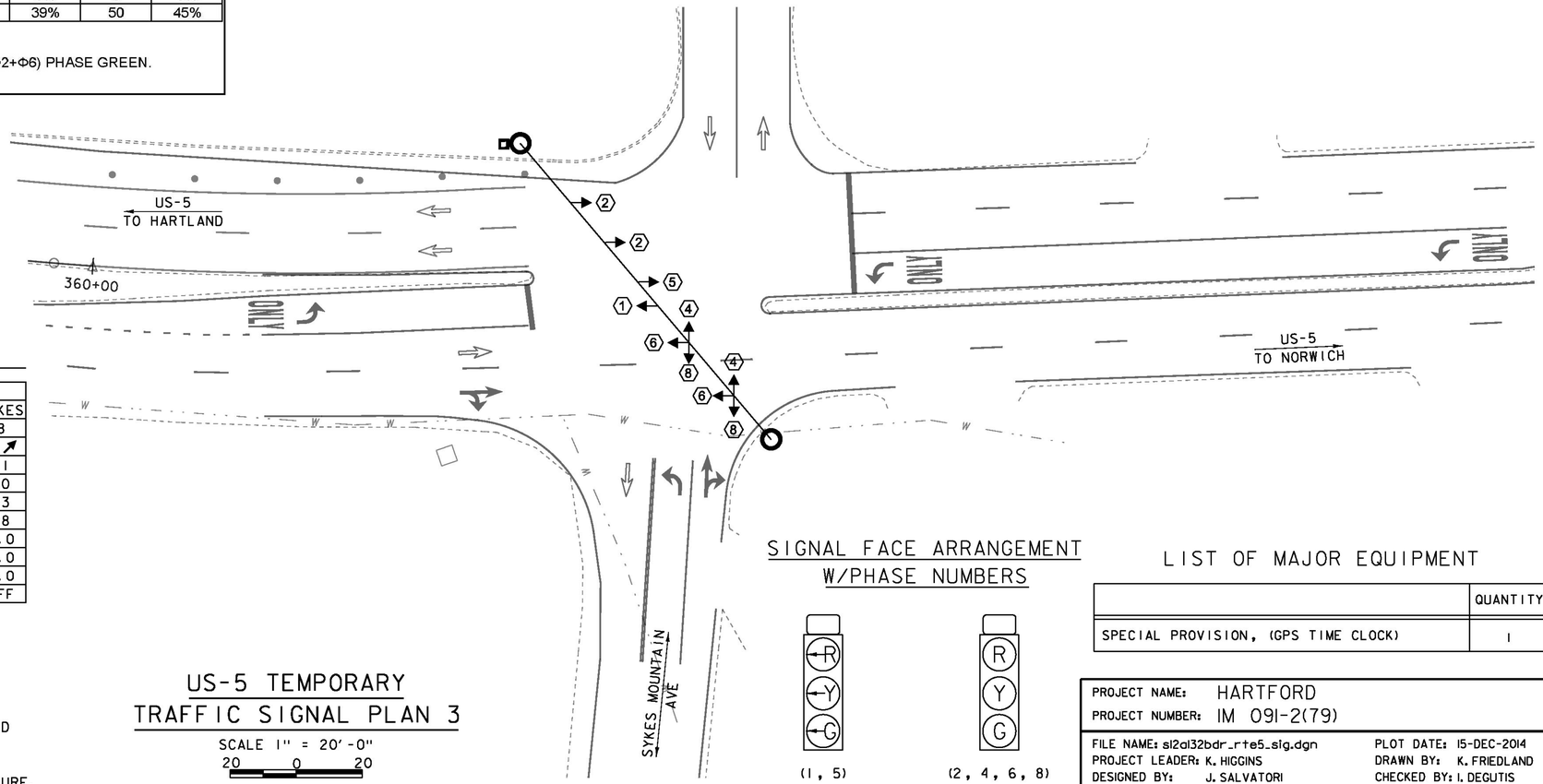


## CONTROLLER TIMING CHART

| US ROUTE 5 & SYKES MOUNTAIN AVENUE | | | | | | | | |
|---|---|---|---|---|---|---|---|---|
| | 5NL | 5ST | | UHAUL | 5SL | 5NT | | SYKES |
| PHASE | 1 | 2 | 3 | 4 | 5 | 6 | 7 | 8 |
| TRAFFIC MOVEMENT | ↗ | ← | | ↙ ↘ | ↙ | → | | ↖ ↗ |
| MINIMUM GREEN | 6 | 11 | | 11 | 6 | 11 | | 11 |
| MAXIMUM 1 GREEN | 5 | 23 | | 20 | 18 | 23 | | 20 |
| MAXIMUM 2 GREEN | 5 | 22 | | 23 | 15 | 22 | | 23 |
| MAXIMUM 3 GREEN | 5 | 32 | | 38 | 21 | 32 | | 38 |
| YELLOW CLEARANCE | 4.0 | 4.0 | | 4.0 | 4.0 | 4.0 | | 4.0 |
| ALL RED CLEARANCE | 2.0 | 2.0 | | 3.0 | 2.0 | 2.0 | | 3.0 |
| VEH. EXTENSION | 1.0 | 2.0 | | 2.0 | 1.0 | 2.0 | | 2.0 |
| RECALL MODE | OFF | MIN | | OFF | OFF | MIN | | OFF |

NOTES:

1) CONTROLLER SHALL REVERT BACK TO EXISTING TIME-OF-DAY PROGRAMMING FOR MAXIMUM 1 OR FLASH, MAXIMUM 2, AND MAXIMUM 3 PROGRAMMING BY TIME-OF-DAY DURING CLOSURE.

2) CONTROLLER SHALL BE INITIALLY PROGRAMMED AND FINE-TUNED BASED ON PREVAILING FIELD CONDITIONS FOR MAXIMUM 1, OR FLASH (IF RETAINED AS EXISTING), MAXIMUM 2, AND COORDINATOR PROGRAMMING BY TIME-OF-DAY DURING NON-CLOSURE.

## US-5 TEMPORARY TRAFFIC SIGNAL PLAN 3

SCALE 1" = 20'-0"
20 0 20

## SIGNAL FACE ARRANGEMENT W/PHASE NUMBERS




## LIST OF MAJOR EQUIPMENT

| | QUANTITY |
|---|---|
| SPECIAL PROVISION, (GPS TIME CLOCK) | 1 |

PROJECT NAME: HARTFORD
PROJECT NUMBER: IM 091-2(79)

FILE NAME: sl2al32bdr_rte5_sig.dgn
PROJECT LEADER: K. HIGGINS
DESIGNED BY: J. SALVATORI
US5 TEMPORARY TRAFFIC SIGNAL PLAN 3

PLOT DATE: 15-DEC-2014
DRAWN BY: K. FRIEDLAND
CHECKED BY: I. DEGUTIS
SHEET 49 OF 166

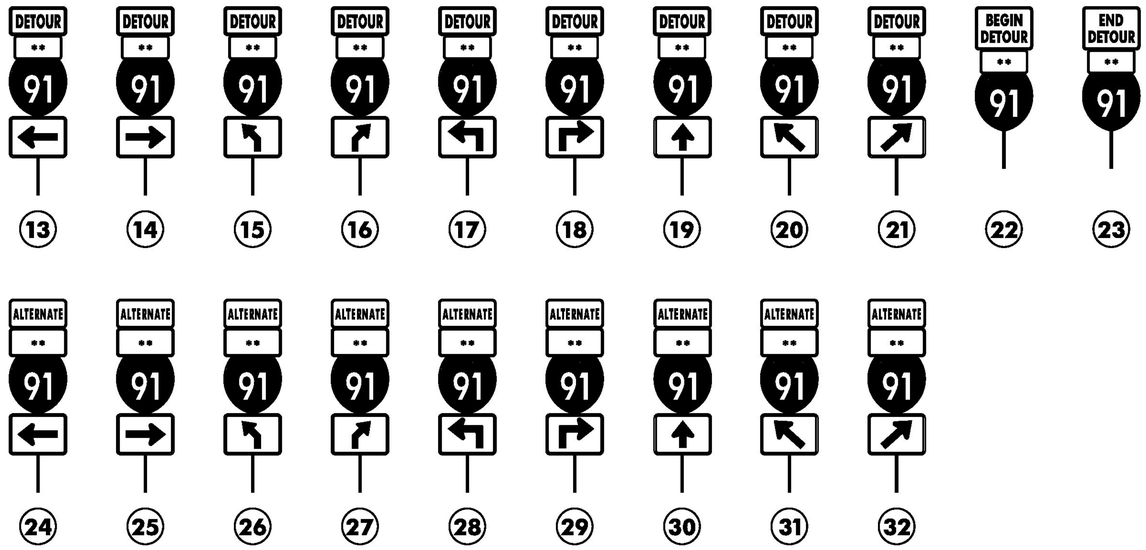








**N= NORTH OR S= SOUTH

## DETOUR SIGN LEGEND

NOT TO SCALE

NOTES:

1. THE PORTABLE CHANGEABLE MESSAGE SIGNS SHALL BE FULLY OPERATIONAL A MINIMUM OF TWO WEEKS PRIOR TO THE CLOSURE OF I-91 OR US-5 AS APPLICABLE.
2. DURING ACTUAL CLOSURE, ELIMINATE PHASE 3 AND REMOVE "WILL BE" FROM PHASE 1.
3. DETOUR SIGNS SHALL BE LOCATED ADJACENT TO EXISTING INTERSECTION ROUTE MARKER ASSEMBLIES WHERE APPLICABLE.
4. CONFIRMATION ROUTE MARKERS SHALL BE INSTALLED IMMEDIATELY FOLLOWING EACH TURN AND AT ALL LOCATIONS ALONG DETOUR WHERE ROUTE MARKERS EXIST FOR THE PARENT ROUTE.
5. DETOUR SIGNING IS THE RESPONSIBILITY OF THE CONTRACTOR. PAYMENT FOR ALL TEMPORARY TRAFFIC CONTROL DEVICES FOR IMPLEMENTING THE DETOUR, INCLUDING BUT NOT LIMITED TO SIGNS, BARRICADES AND MESSAGE BOARDS, WILL BE INCLUDED IN THE UNIT PRICE BID FOR CONTRACT ITEM 900.645 SPECIAL PROVISION TRAFFIC CONTROL, ALL - INCLUSIVE).
6. THIS DETOUR PLAN IS A CONCEPTUAL OUTLINE ONLY AND THE CONTRACTOR SHALL SUBMIT A DETAILED PLAN OF EACH INTERSECTION SHOWING DETOUR SIGN LOCATIONS IN RELATION TO EXISTING SIGNS.

(S)

| I-91 | | | | |
|---|---|---|---|---|
| WILL | | BE | | |
| CLOSED | | | | |

**PORTABLE CHANGEABLE SIGN - PHASE 1**

(S)

| BETWEEN | |
|---|---|
| EXIT | 11- |
| EXIT | 10 |

**PORTABLE CHANGEABLE SIGN - PHASE 2 SB**

(S)

| BETWEEN | |
|---|---|
| EXIT | 11- |
| EXIT | 12 |

**PORTABLE CHANGEABLE SIGN - PHASE 2 NB**

* M=MONTH D=DAY

(S)

| | | | | | | |
|---|---|---|---|---|---|---|
| * MMMM | | DD | - | | | |
| * MMMM | | DD | | | | |
| | | | | | | |

**PORTABLE CHANGEABLE SIGN - PHASE 3**

| | |
|---|---|
| PROJECT NAME: | HARTFORD |
| PROJECT NUMBER: | IM 091-2(79) |
| FILE NAME: sl2al32detour.dgn | PLOT DATE: 15-DEC-2014 |
| PROJECT LEADER: K. HIGGINS | DRAWN BY: K. FRIEDLAND |
| DESIGNED BY: W. LAMMER | CHECKED BY: W. LAMMER |
| DETOUR SIGN LEGEND | SHEET 50 OF 166 |

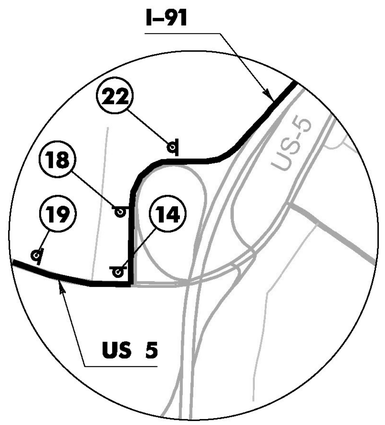


I-91 EXIT 11
WHITE RIVER
JUNCTION

INSET "A"
I-91 EXIT 11
WHITE RIVER JUNCTION
NOT TO SCALE

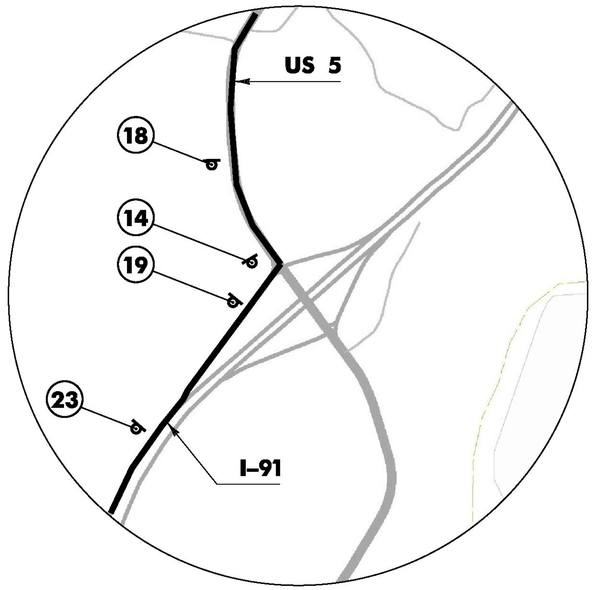


INSET "B"
I-91 EXIT 9
HARTLAND
NOT TO SCALE

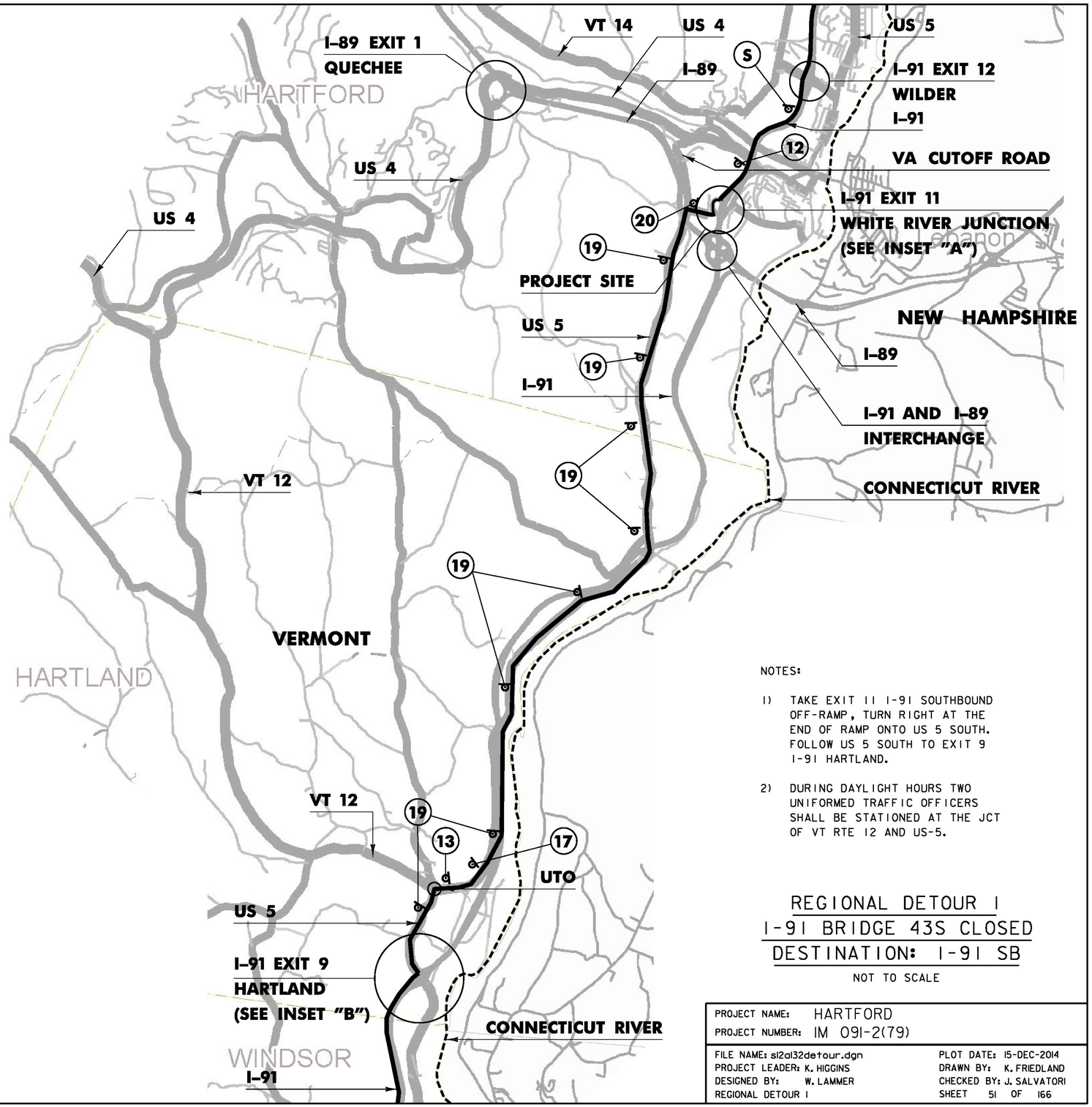


NOTES:

1) TAKE EXIT 11 I-91 SOUTHBOUND OFF-RAMP, TURN RIGHT AT THE END OF RAMP ONTO US 5 SOUTH. FOLLOW US 5 SOUTH TO EXIT 9 I-91 HARTLAND.

2) DURING DAYLIGHT HOURS TWO UNIFORMED TRAFFIC OFFICERS SHALL BE STATIONED AT THE JCT OF VT RTE 12 AND US-5.

REGIONAL DETOUR 1
I-91 BRIDGE 43S CLOSED
DESTINATION: I-91 SB
NOT TO SCALE

| | |
|---|---|
| PROJECT NAME: | HARTFORD |
| PROJECT NUMBER: | IM 091-2(79) |
| FILE NAME: sl2al32detour.dgn | PLOT DATE: 15-DEC-2014 |
| PROJECT LEADER: K. HIGGINS | DRAWN BY: K. FRIEDLAND |
| DESIGNED BY: W. LAMMER | CHECKED BY: J. SALVATORI |
| REGIONAL DETOUR 1 | SHEET 51 OF 166 |

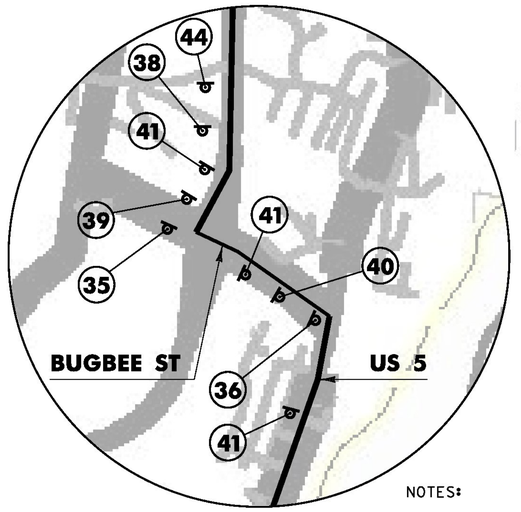


INSET "A"
I-91 EXIT 12
WILDER
NOT TO SCALE

NOTES:

1) TAKE EXIT 12 I-91 SOUTHBOUND OFF-RAMP. TURN LEFT AT THE END OF RAMP, FOLLOW 0.4 MILES TO US 5 SOUTH. FOLLOW US 5 SOUTH TO US 4 WEST. FOLLOW US 4 TO I-89 EXIT 1, NORTHBOUND OR SOUTHBOUND.

2) DURING DAYLIGHT HOURS ONE UNIFORMED TRAFFIC OFFICER SHALL BE STATIONED AT THE JCT OF US RT4 AND I-89 EXIT 1 SOUTH RAMPS AS SHOWN IN INSET "B".

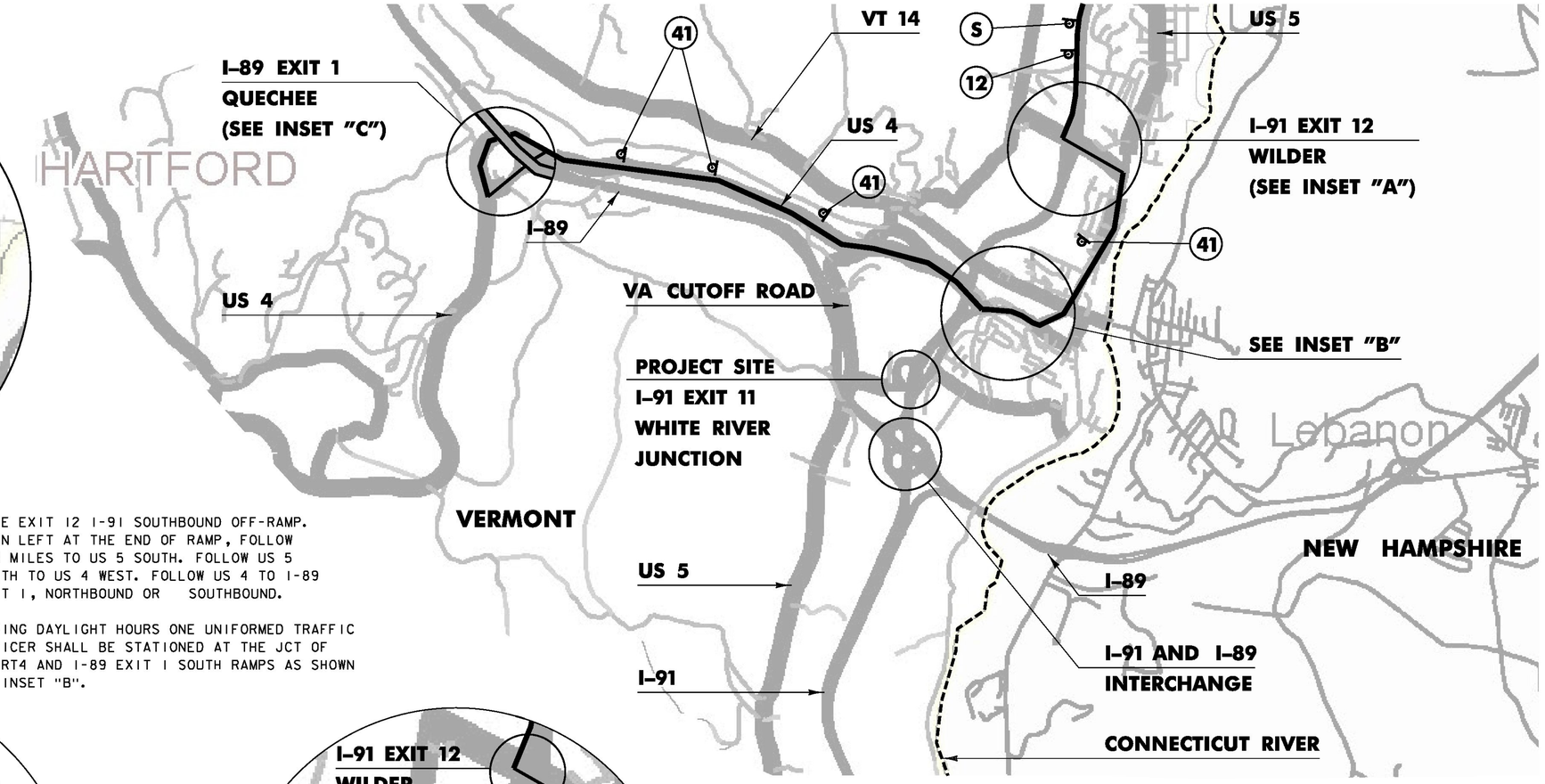


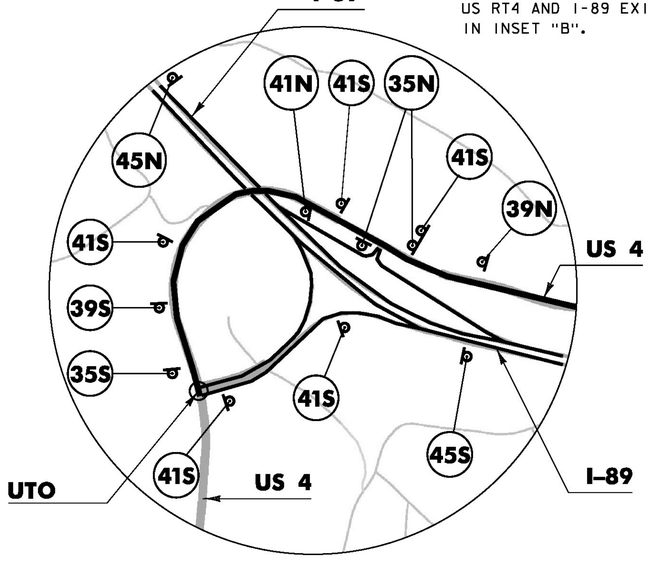


INSET "C"
I-89 EXIT 1
QUECHEE
NOT TO SCALE

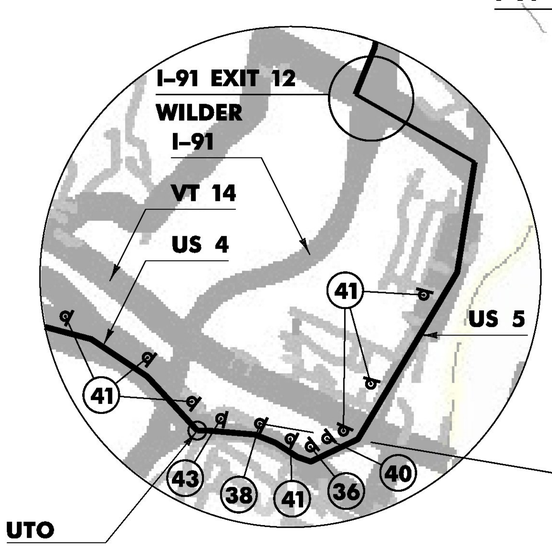


INSET "B"
NOT TO SCALE




REGIONAL DETOUR 2
I-91 BRIDGE 43S CLOSED
DESTINATION: I-89
NOT TO SCALE

PROJECT NAME: HARTFORD
PROJECT NUMBER: IM 091-2(79)

FILE NAME: si2al32detour.dgn
PROJECT LEADER: K. HIGGINS
DESIGNED BY: W. LAMMER
REGIONAL DETOUR 2

PLOT DATE: 15-DEC-2014
DRAWN BY: K. FRIEDLAND
CHECKED BY: J. SALVATORI
SHEET 52 OF 166

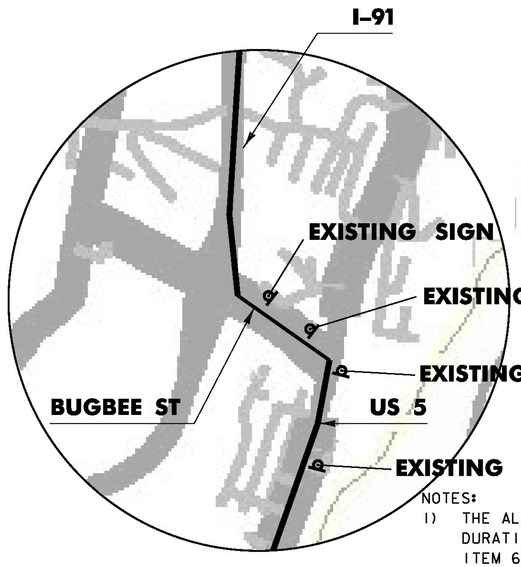


INSET "A"
I-91 EXIT 12
WILDER
NOT TO SCALE

NOTES:

1) THE ALTERNATE ROUTE SHALL BE SIGNED FOR THE DURATION OF THE PROJECT AND PAID FOR UNDER ITEM 641.10, "TRAFFIC CONTROL, (I-91 NORTHBOUND).

2) ALTERNATE ROUTE SHALL BE ACTIVATED AS PART OF THE SMART WORK ZONE WHEN EXTENDED QUEUES ARE EXPERIENCED AT THE INTERCHANGE.

3) I-89 NORTHBOUND OR SOUTHBOUND TRAFFIC WISHING TO TRAVEL I-91 NORTHBOUND SHALL PROCEED TO EXIT 1 I-89 NORTHBOUND OFF-RAMP. TURN RIGHT AT THE END OF RAMP, FOLLOW US 4 EAST TO US 5 NORTH. CONTINUE FOLLOWING US 5 NORTH TO EXIT 12 I-91 NORTHBOUND.

4) DURING DAYLIGHT HOURS ONE UNIFORMED TRAFFIC OFFICER SHALL BE STATIONED AT THE JCT OF US RT4 AND RT5 AS SHOWN IN INSET "B".

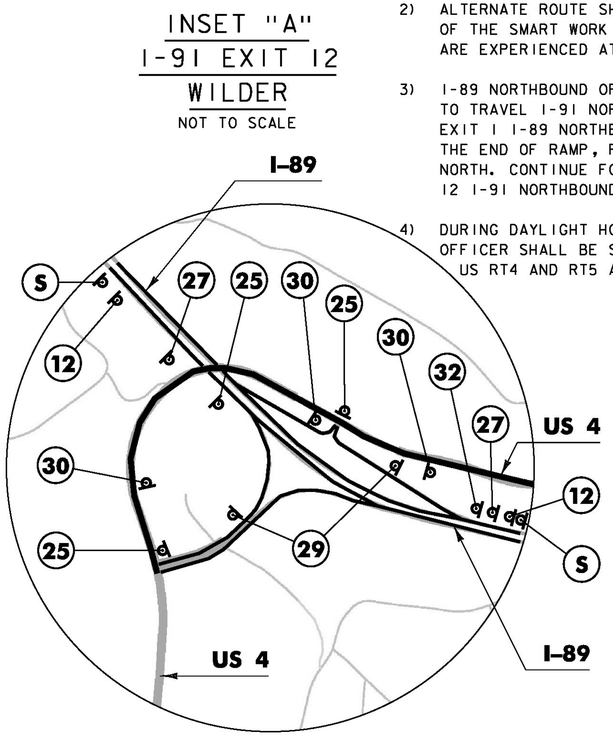


INSET "C"
I-89 EXIT 1
QUECHEE
NOT TO SCALE

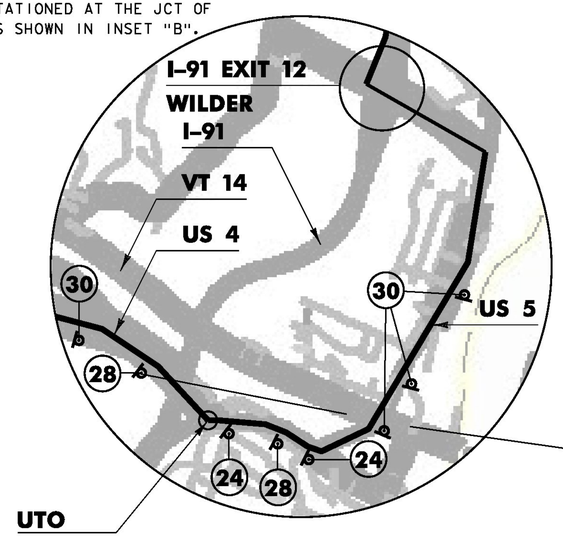


INSET "B"
NOT TO SCALE

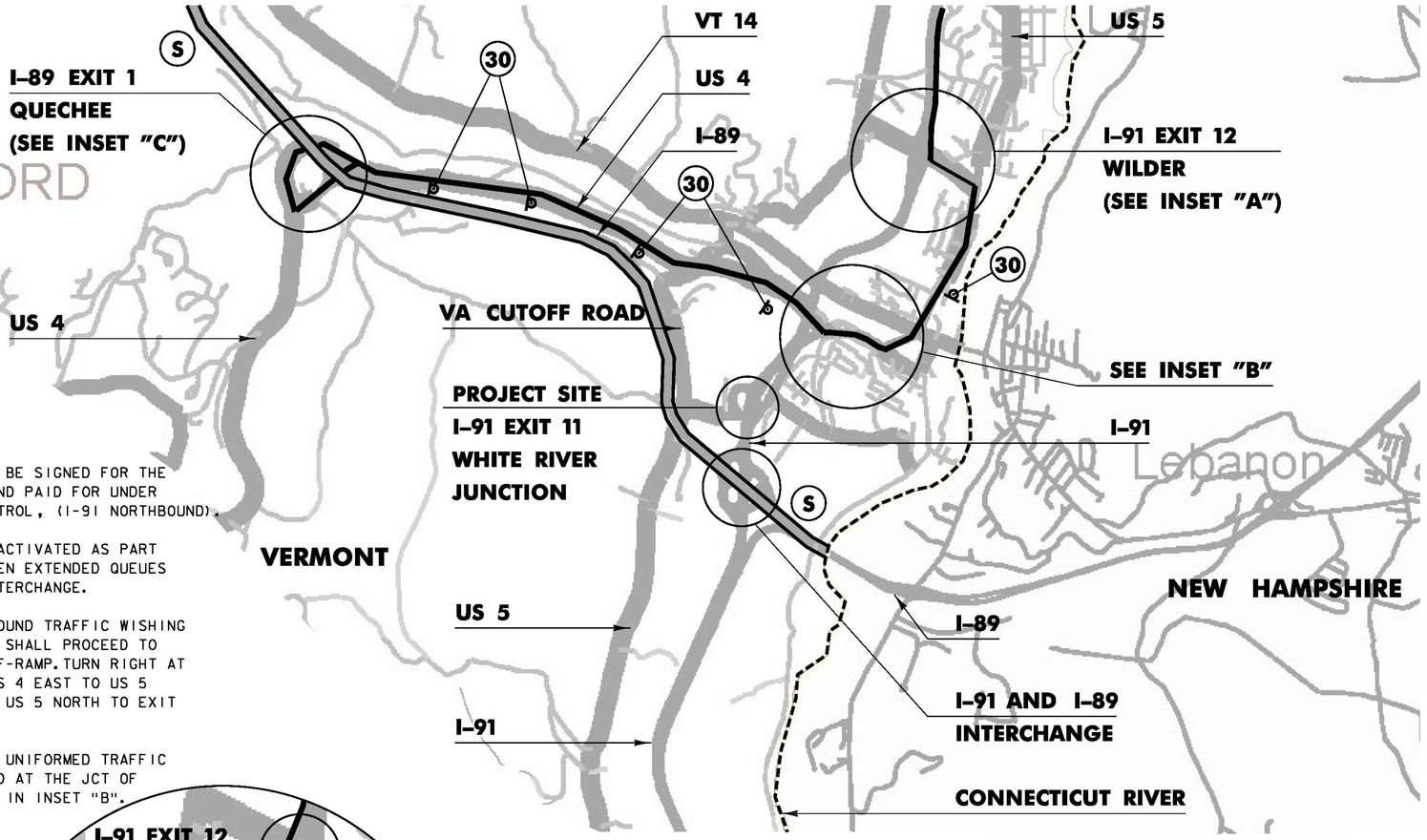




COVER
SIGN

ALTERNATE ROUTE TO I-91
NOT TO SCALE

| | |
|---|---|
| PROJECT NAME: HARTFORD | |
| PROJECT NUMBER: IM 091-2(79) | |
| FILE NAME: sl2al32detour.dgn | PLOT DATE: 15-DEC-2014 |
| PROJECT LEADER: K. HIGGINS | DRAWN BY: J. SALVATORI |
| DESIGNED BY: J. SALVATORI | CHECKED BY: M. MILLER |
| ALTERNATE ROUTE TO I-91 | SHEET 53 OF 166 |

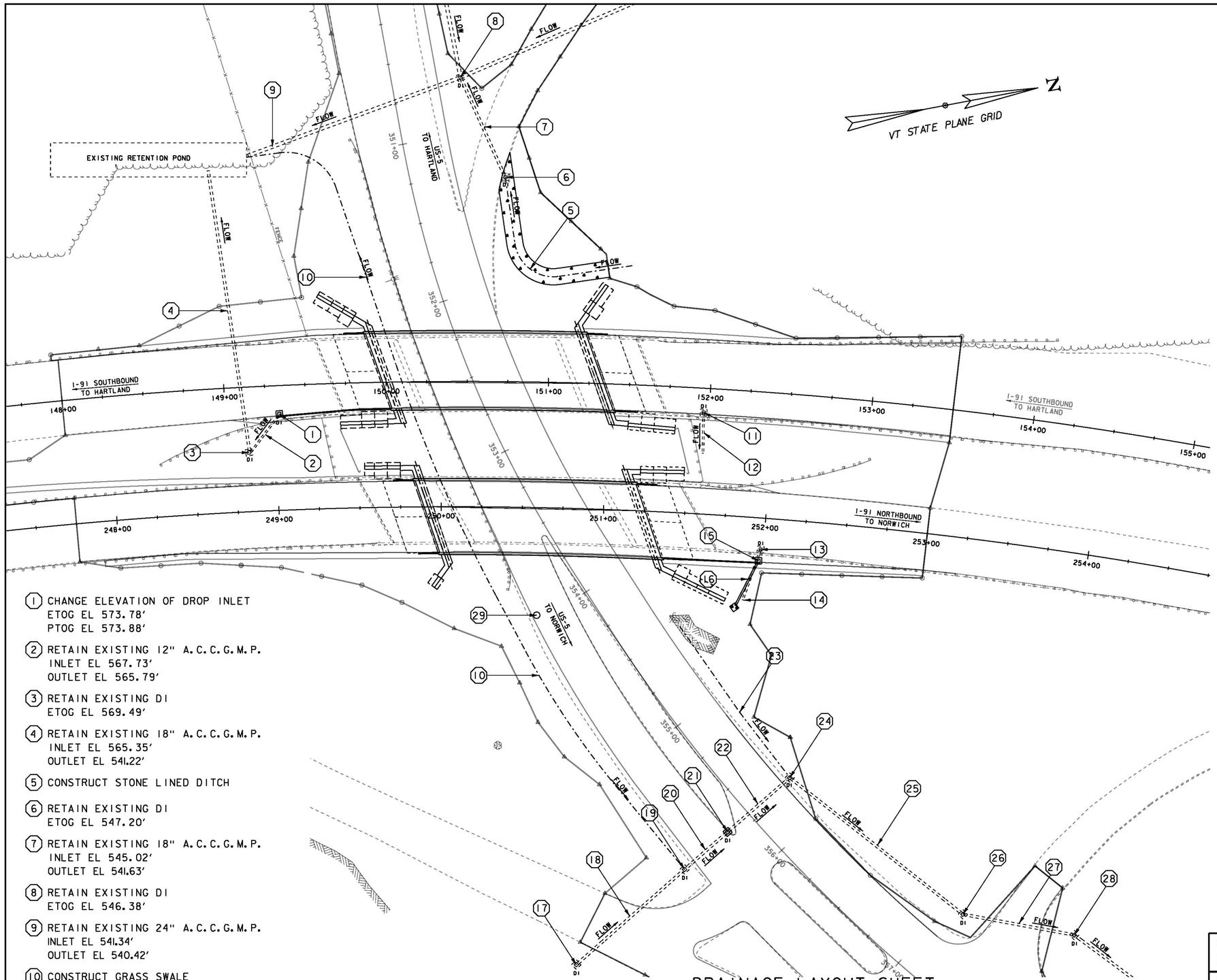


(1) CHANGE ELEVATION OF DROP INLET
ETOG EL 573.78'
PTOG EL 573.88'

(2) RETAIN EXISTING 12" A.C.C.G.M.P.
INLET EL 567.73'
OUTLET EL 565.79'

(3) RETAIN EXISTING DI
ETOG EL 569.49'

(4) RETAIN EXISTING 18" A.C.C.G.M.P.
INLET EL 565.35'
OUTLET EL 541.22'

(5) CONSTRUCT STONE LINED DITCH

(6) RETAIN EXISTING DI
ETOG EL 547.20'

(7) RETAIN EXISTING 18" A.C.C.G.M.P.
INLET EL 545.02'
OUTLET EL 541.63'

(8) RETAIN EXISTING DI
ETOG EL 546.38'

(9) RETAIN EXISTING 24" A.C.C.G.M.P.
INLET EL 541.34'
OUTLET EL 540.42'

(10) CONSTRUCT GRASS SWALE

(11) REMOVE EXISTING DI
ETOG EL 569.68'

(12) REMOVE EXISTING BURIED PIPE
INLET EL UNKNOWN
OUTLET EL UNKOWN

(13) REMOVE EXISTING DI
ETOG EL 569.68'

(14) REMOVE EXISTING 12" C.G.M.P.
INLET EL 564.70'
OUTLET EL 562.81'

(15) NEW PRECAST REINFORCED CONCRETE DROP INLET
WITH CAST IRON GRATE
PTOG EL 569.50'
SUMP EL 563.50'

(16) NEW 18" x 30' OPTION PIPE WITH
4' WIDE x 4' LONG STONE PAD
INLET EL 564.50'
OUTLET EL 562.00'

(17) RETAIN EXISTING DI
ETOG EL 552.50'

(18) RETAIN EXISTING 18" RCP
INLET EL 548.51'
OUTLET EL 544.72'

(19) RETAIN EXISTING DI
ETOG EL 549.06'

(20) RETAIN EXISTING 18" RCP
INLET EL 548.51'
OUTLET EL 544.72'

(21) NEW CAST IRON COVER WITH FRAME
ON EXISTING DI
ETOG EL 549.01'
PTOG EL 548.75'

(22) RETAIN EXISTING 18" RCP
INLET EL 540.15'
OUTLET EL 536.65'

(23) CONSTRUCT GRASS SWALE

(24) RETAIN EXISTING DI
ETOG EL 544.28'

(25) RETAIN EXISTING 18" RCP
INLET EL 536.37'
OUTLET EL 535.32'

(26) RETAIN EXISTING DI
ETOG EL 540.72'

(27) RETAIN EXISTING 18" RCP
INLET EL 535.21'
OUTLET EL 539.93'

(28) RETAIN EXISTING DI
ETOG EL 540.26'

(29) CHANGE ELEVATION OF MANHOLE
ETOG EL 551.84'
PTOG EL 551.54'

ETOG = EXISTING TOP OF GRATE
PTOG = PROPOSED TOP OF GRATE

# DRAINAGE LAYOUT SHEET

SCALE 1" = 30'-0"
30 0 30

| | |
|---|---|
| PROJECT NAME: | HARTFORD |
| PROJECT NUMBER: | IM 091-2(79) |
| FILE NAME: sl2al32drain.dgn | PLOT DATE: 15-DEC-2014 |
| PROJECT LEADER: K. HIGGINS | DRAWN BY: J. GRIGAS |
| DESIGNED BY: J. GRIGAS | CHECKED BY: W. LAMMER |
| DRAINAGE LAYOUT SHEET | SHEET 54 OF 166 |

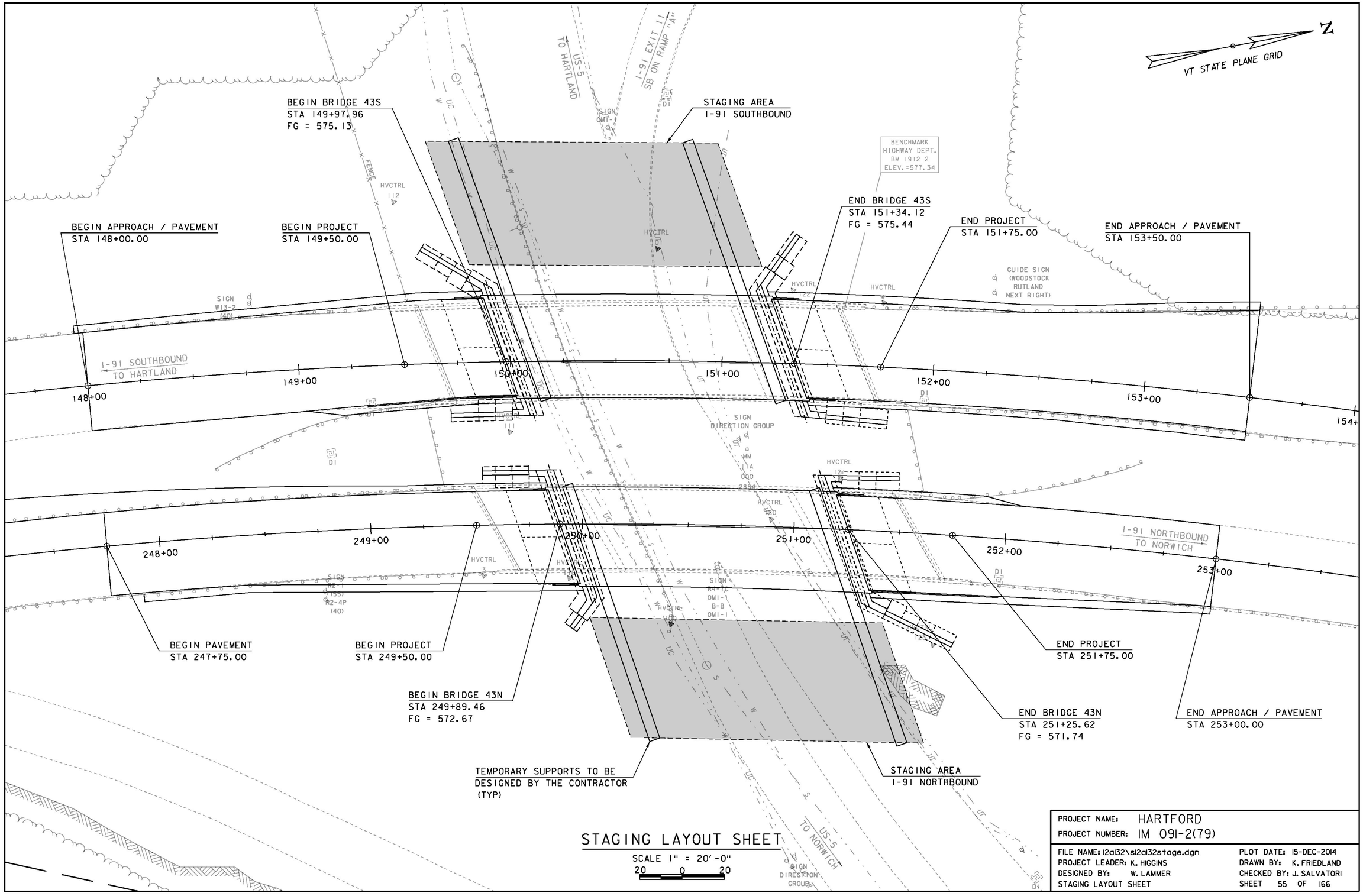


# STAGING LAYOUT SHEET

SCALE 1" = 20'-0"
20 0 20

| | |
|---|---|
| PROJECT NAME: | HARTFORD |
| PROJECT NUMBER: | IM 091-2(79) |
| FILE NAME: I2al32\sl2al32stage.dgn | PLOT DATE: 15-DEC-2014 |
| PROJECT LEADER: K. HIGGINS | DRAWN BY: K. FRIEDLAND |
| DESIGNED BY: W. LAMMER | CHECKED BY: J. SALVATORI |
| STAGING LAYOUT SHEET | SHEET 55 OF 166 |

INSTALL SHUT OFF VALVE
STA 351+25.00, OFFSET 46.6' RT

EXISTING 10" V.C.
SEWER LINE

PROPOSED 12" D.I.
WATER LINE

EXISTING FIBER OPTIC
(TO BE ABANDONED)

EXISTING 8" D.I.
WATER LINE

EXISTING 12" D.I. WATER LINE
(TO BE ABANDONED)

INSTALL SHUT OFF VALVE
STA 354+75.00, OFFSET 50.0' RT

EXISTING FIBER OPTIC
(CAPPED WITH CONCRETE)

I-91 SOUTHBOUND
TO HARTLAND

I-91 NORTHBOUND
TO NORWICH

US-5
TO HARTLAND

US-5
TO NORWICH

I-91 EXIT 11
SB ON RAMP "A"

VT STATE PLANE GRID

NOTES:

1) LOCATIONS OF EXISTING UTILITIES ARE APPROXIMATE.

2) ALL UTILITY WORK TO BE COMPLETED BY OTHERS.

3) THE EXISTING FIBER OPTIC ON THE SOUTHERN SIDE OF US5 WILL BE ABANDONED. IT WILL BE RE-ROUTED OUTSIDE THE PROJECTS LIMITS VIA OVERHEAD LINE BY FALL 2014.

4) VALVES SHALL BE INSTALLED ON THE EXISTING 12" WATER LINE AS SHOWN ON THE PLANS BY FALL 2014. PRIOR TO CONSTRUCTION, THE VALVES WILL BE CLOSED AND THE LINE BETWEEN THE LINES SHALL BE ABANDONED.

5) THE NEW 12" WATER LINE SHALL NOT BE INSTALLED UNTIL AFTER THE PIER #1 IS REMOVED.

6) NO DRILLING OR BLASTING SHALL OCCUR WITHIN 10 FEET OF ANY UTILITY WITHOUT THE WRITTEN PERMISSION OF THE UTILITY OWNER. SEE SPECIAL PROVISIONS FOR FURTHER DETAILS.

# UTILITY LAYOUT SHEET

SCALE 1" = 20'-0"
20 0 20

PROJECT NAME: HARTFORD
PROJECT NUMBER: IM 091-2(79)

FILE NAME: sl2al32bdr_utl.dgn
PROJECT LEADER: K. HIGGINS
DESIGNED BY: W. LAMMER
UTILITY LAYOUT SHEET

PLOT DATE: 15-DEC-2014
DRAWN BY: K. FRIEDLAND
CHECKED BY: J. SALVATORI
SHEET 56 OF 166

DURABLE 12" WHITE LINE, RECESSED POLYUREA (DOTTED)
STA 148+00.00 - 153+00.00 LT

DURABLE 12" WHITE LINE, RECESSED POLYUREA (SOLID)
STA 153+00.00 - 153+50.00 LT

REMOVAL OF EXISTING DELINEATOR
STA 148+86.25 RT
STA 151+50.25 RT
STA 248+96.50 LT
STA 251+79.00 LT

DELINEATOR, TYPE I (YELLOW)
STA 148+86.25 RT
STA 151+50.25 RT
STA 248+96.50 LT
STA 251+79.00 LT

DURABLE 6" WHITE LINE, RECESSED POLYUREA (SOLID)
STA 148+00.00 - 153+50.00 LT
STA 247+75.00 - 253+00.00 LT

DURABLE 6" YELLOW LINE, RECESSED POLYUREA (SOLID)
STA 148+00.00 - 153+50.00 RT
STA 247+75.00 - 253+00.00 RT

DURABLE 6" WHITE LINE, RECESSED POLYUREA (DASHED)
STA 148+00.00 - 153+50.00 ℄
STA 247+75.00 - 253+00.00 ℄

N
VT STATE PLANE GRID

STA 148+79.00 LT
EXIT 40 M.P.H. RET
RET

STA 148+86.25 LT
70 15 R
R
70 15 N
N

STA 151+50.25 LT
STA 151+35.00 LT
BRIDGE 10-S I-91 N
N
MILE 70 2 N
N
STA 151+64.00 LT
BRIDGE 10-S I-91 R
R

STA 152+26.00 LT
WOODSTOCK RUTLAND NEXT RIGHT RET
RET

GUIDE SIGN (WOODSTOCK RUTLAND NEXT RIGHT)

SIGN W13-2 (40)

I-91 SOUTHBOUND TO HARTLAND

I-91 EXIT 11 SB ON RAMP "A"

US-5 TO HARTLAND

STREET LIGHT

SIGN DIRECTION GROUP

I-91 NORTHBOUND TO NORWICH

SIGN R2-1 (55)
SIGN R2-4P (40)

SIGN R4-8 OM1-B-B OM1-1

SPEED LIMIT 55 RET
MINIMUM SPEED 40 RET
RET

STA 248+77.00 RT

70 15 R
R
70 15 N
N

STA 248+96.50 RT

BRIDGE 10-N I-91 R
R

STA 249+60.00 RT

BRIDGE 10-N I-91 N
N

STA 249+85.00 RT

70 20 R
R
MILE 70 2 N
N

STA 251+79.00 RT

I-91 EXIT 11 NB OFF RAMP "C"

MILLED RUMBLE STRIP
STA 148+00.00 - 149+87.00 LT
STA 247+75.00 - 249+85.00 RT
STA 247+75.00 - 249+63.00 LT
STA 247+75.00 - 249+72.00 RT
STA 251+42.00 - 253+00.00 LT
STA 251+53.00 - 253+00.00 RT

NOTE:
ADJUST NEW CENTERLINE AND EDGE LINES TO MATCH EXISTING LINES AT BEGIN/END APPROACH

SIGN LEGEND
N = NEW
R = REMOVE
S = SALVAGE
R&S = REMOVE & SALVAGE
RET = RETAIN

# SIGN & PAVEMENT MARKINGS SHEET

SCALE 1" = 20'-0"
20 0 20

PROJECT NAME: HARTFORD
PROJECT NUMBER: IM 091-2(79)

FILE NAME: sl2al32bdr_signs.dgn
PROJECT LEADER: K. HIGGINS
DESIGNED BY: W. LAMMER
SIGN & PAVEMENT MARKINGS SHEET

PLOT DATE: 15-DEC-2014
DRAWN BY: K. FRIEDLAND
CHECKED BY: J. SALVATORI
SHEET 57 OF 166

**STATE OF VERMONT**
**AGENCY OF TRANSPORTATION**

# TRAFFIC SIGN SUMMARY SHEET

| MILEMARKER, STATION, OR SIGN NUMBER | SIGN LEGEND | SIGN DIMENSIONS | | | NEW & SALVAGED SIGNS | | | | EXIST POST | | NEW SIGN POSTS | | | | | | | | | | | | | | | | | | | | | | REMARKS | SIGN DETAIL | | |
|---|---|---|---|---|---|---|---|---|---|---|---|---|---|---|---|---|---|---|---|---|---|---|---|---|---|---|---|---|---|---|---|---|---|---|---|
| | | EA | WIDTH (in) | HEIGHT (in) | "A" | "B" | SALV SIGN | SALV TIS | RETAIN | SALVAGE | NO. OF POSTS | FLANGED CHANNEL lb/ft | | | SQUARE STEEL (in) lb/ft | | | ANCHOR | SLEEVE | TUBULAR ALUMINUM Ø (in) lb/ft | | | FOUND-ATION | TUBULAR STEEL Ø (in) lb/ft | | | | W-SHAPE STEEL FTG. SIZE | | WEIGHT | POST SIZE | SIGN FRAME REQUIRED | | DETAIL IN SHSM | DETAIL ON SHEET NUMBER | STD. SHEET NUMBER |
| | | | | | | | | | | | | | | | 1.75 | 2.0 | 2.5 | | | 3.0 | 4.0 | 4.0 MOD | | 3.0 | 3.5 | 4.0 | 5.0 | 24" | 30" | | | | | | |
| | | | | | | | | | | | | 1.12 | 2.0 | 3.0 | 1.88 | 2.42 | 3.35 | | | 1.3 | 1.7 | 1.7 | | 7.6 | 9.0 | 10.8 | 14.6 | | | | | | | | |
| | | | | | | | | | | | OPTION ITEMS | | | | | | | | | | | | | | | | | | | | | | | | | |
| 148+86.25 LT | 70 15 | 1 | 6 | 8 | 0.33 | | | | | | 1 | | | | 8 | | | X | | | | | | | | | | | | | | | | T-40 |
| 151+50.25 LT | M3 7 0 2 | 1 | 12 | 48 | 4 | | | | | | 1 | | | | 8 | | | X | | | | | | | | | | | | | | D10-2a | X | | |
| 151+35.00 LT | BRIDGE 10-S I-91 | 1 | 6 | 8 | 0.33 | | | | | | 1 | | | | 8 | | | X | | | | | | | | | | | | | | | | T-42 |
| | | | | | | | | | | | | | | | | | | | | | | | | | | | | | | | | | | | |
| 248+96.50 RT | 70 15 | 1 | 6 | 8 | 0.33 | | | | | | 1 | | | | 8 | | | X | | | | | | | | | | | | | | | | T-40 |
| 249+85.00 RT | BRIDGE 10-N I-91 | 1 | 6 | 8 | 0.33 | | | | | | 1 | | | | 8 | | | X | | | | | | | | | | | | | | | | T-42 |
| 251+79.00 RT | M3 7 0 2 | 1 | 12 | 48 | 4 | | | | | | 1 | | | | 8 | | | X | | | | | | | | | | | | | | D10-2a | X | | |
| | | | | | | | | | | | | | | | | | | | | | | | | | | | | | | | | | | | |
| **TOTALS** | | | | | SF 9.32 | SF | EA. | SF | | | | FT | FT | FT | FT 48 | FT | FT | EA | LB | LB | LB | EA. | LB | LB | LB | LB | EA. | EA. | LB | | | | | | |

FINAL POST LENGTHS ARE TO BE DETERMINED IN THE FIELD. POST SIZES ARE COMPUTED BASED ON INFORMATION FURNISHED ON THE STANDARD SHEETS AND VTRANS "SIGN POST DESIGN GUIDELINE."
SHS = STANDARD HIGHWAY SIGNS

PROJECT NAME: HARTFORD
PROJECT NUMBER: IM 091-2(79)

FILE NAME: sl2al32tss.dgn
PROJECT LEADER: K. HIGGINS
DESIGNED BY: W. LAMMER
TRAFFIC SIGN SUMMARY SHEET

PLOT DATE: 15-DEC-2014
DRAWN BY: K. FRIEDLAND
CHECKED BY: J. SALVATORI

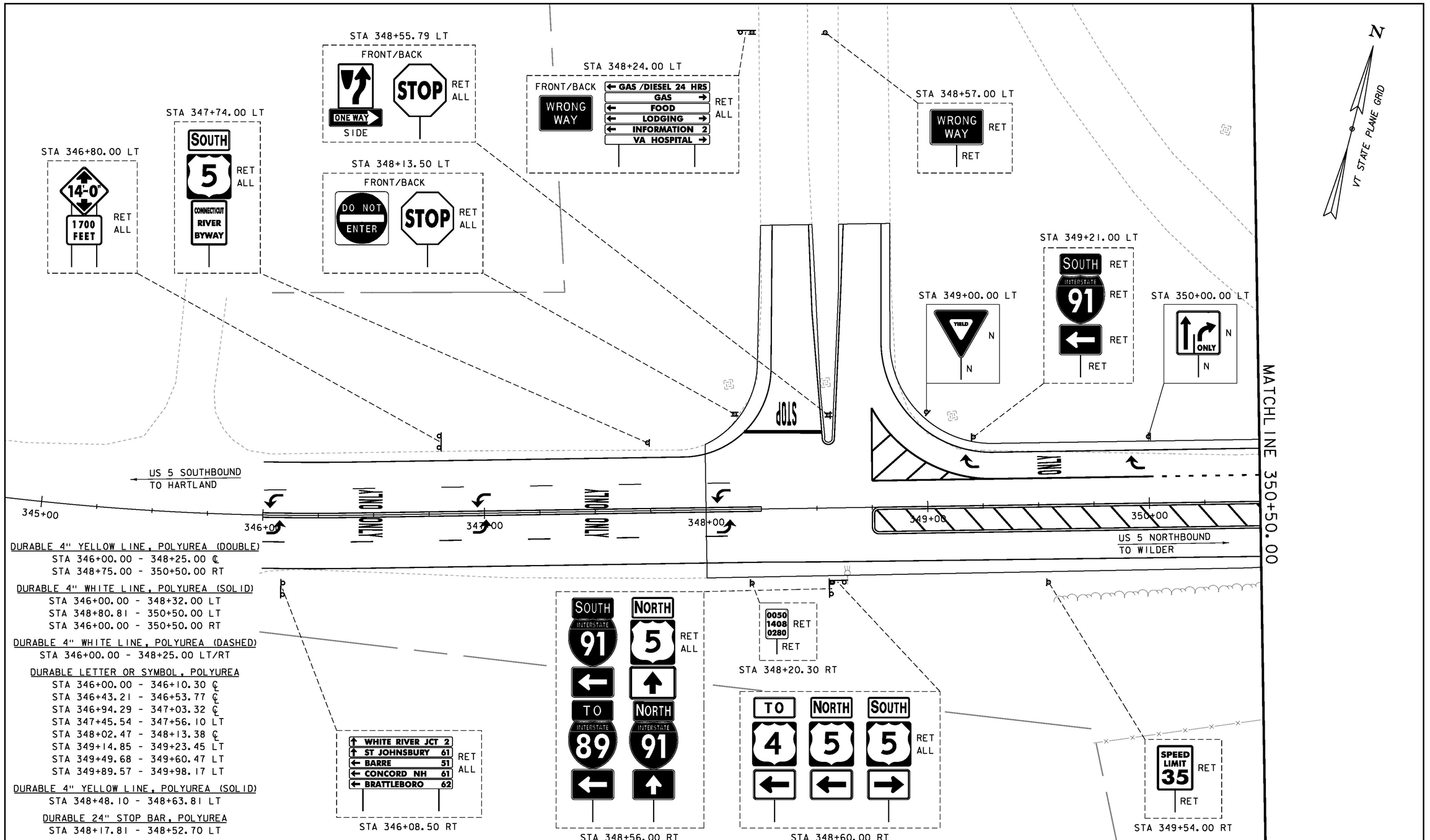


DURABLE 4" YELLOW LINE, POLYUREA (DOUBLE)
STA 346+00.00 - 348+25.00 ℄
STA 348+75.00 - 350+50.00 RT

DURABLE 4" WHITE LINE, POLYUREA (SOLID)
STA 346+00.00 - 348+32.00 LT
STA 348+80.81 - 350+50.00 LT
STA 346+00.00 - 350+50.00 RT

DURABLE 4" WHITE LINE, POLYUREA (DASHED)
STA 346+00.00 - 348+25.00 LT/RT

DURABLE LETTER OR SYMBOL, POLYUREA
STA 346+00.00 - 346+10.30 ℄
STA 346+43.21 - 346+53.77 ℄
STA 346+94.29 - 347+03.32 ℄
STA 347+45.54 - 347+56.10 LT
STA 348+02.47 - 348+13.38 ℄
STA 349+14.85 - 349+23.45 LT
STA 349+49.68 - 349+60.47 LT
STA 349+89.57 - 349+98.17 LT

DURABLE 4" YELLOW LINE, POLYUREA (SOLID)
STA 348+48.10 - 348+63.81 LT

DURABLE 24" STOP BAR, POLYUREA
STA 348+17.81 - 348+52.70 LT

DURABLE 8" YELLOW LINE, POLYUREA (SOLID)
STA 348+75.00 - 350+50.00 RT

DURABLE 8" WHITE LINE, POLYUREA (SOLID)
STA 348+75.00 - 350+00.00 LT

DURABLE 8" WHITE LINE, POLYUREA (DOTTED)
STA 350+00.00 - 350+50.00 LT

NOTE:
ADJUST NEW CENTERLINE AND EDGE LINES TO MATCH EXISTING LINES AT BEGIN/END APPROACH

# US 5 SIGNS & PAVEMENT MARKINGS SHEET 1

SCALE 1" = 20'-0"
20 0 20

SIGN LEGEND
N = NEW
R = REMOVE
S = SALVAGE
R&S = REMOVE & SALVAGE
RET = RETAIN

PROJECT NAME: HARTFORD
PROJECT NUMBER: IM 091-2(79)

FILE NAME: sl2al32bdr_rte5_signs.dgn
PROJECT LEADER: K. HIGGINS
DESIGNED BY: W. LAMMER
US 5 SIGNS & PAVEMENT MARKINGS SHEET 1
PLOT DATE: 15-DEC-2014
DRAWN BY: K. FRIEDLAND
CHECKED BY: J. SALVATORI

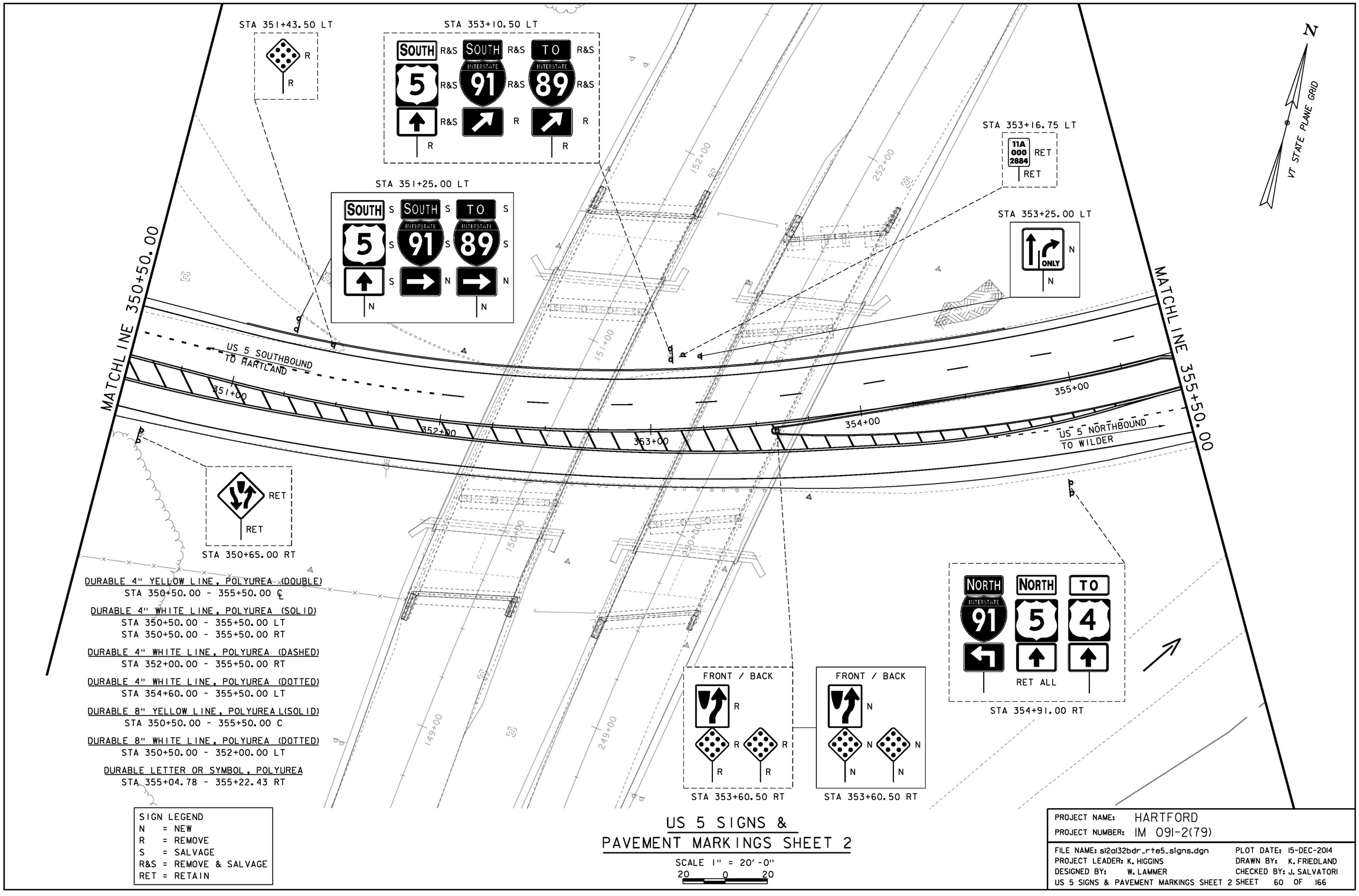


# US 5 SIGNS & PAVEMENT MARKINGS SHEET 2

SCALE 1" = 20'-0"

20 0 20

| | |
|---|---|
| PROJECT NAME: | HARTFORD |
| PROJECT NUMBER: | IM 091-2(79) |
| FILE NAME: sl2al32bdr_rte5_signs.dgn | PLOT DATE: 15-DEC-2014 |
| PROJECT LEADER: K. HIGGINS | DRAWN BY: K. FRIEDLAND |
| DESIGNED BY: W. LAMMER | CHECKED BY: J. SALVATORI |
| US 5 SIGNS & PAVEMENT MARKINGS SHEET 2 | SHEET 60 OF 166 |

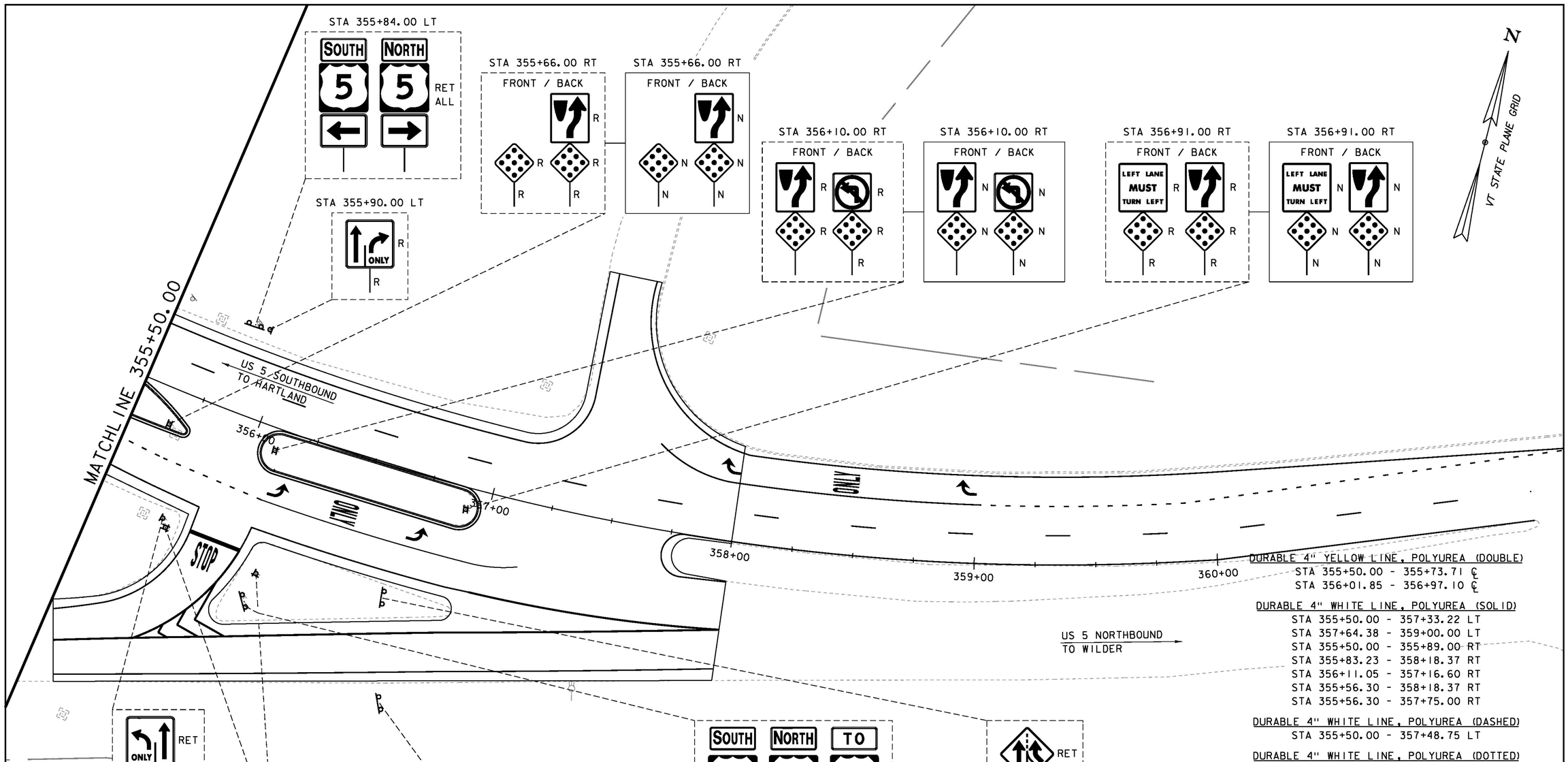


SIGN LEGEND
N = NEW
R = REMOVE
S = SALVAGE
R&S = REMOVE & SALVAGE
RET = RETAIN

NOTE:
ADJUST NEW CENTERLINE AND EDGE LINES TO MATCH EXISTING LINES AT BEGIN/END APPROACH

# US 5 SIGNS & PAVEMENT MARKINGS SHEET 3

SCALE 1" = 20'-0"
20 0 20

DURABLE 4" YELLOW LINE, POLYUREA (DOUBLE)
STA 355+50.00 - 355+73.71 ℄
STA 356+01.85 - 356+97.10 ℄

DURABLE 4" WHITE LINE, POLYUREA (SOLID)
STA 355+50.00 - 357+33.22 LT
STA 357+64.38 - 359+00.00 LT
STA 355+50.00 - 355+89.00 RT
STA 355+83.23 - 358+18.37 RT
STA 356+11.05 - 357+16.60 RT
STA 355+56.30 - 358+18.37 RT
STA 355+56.30 - 357+75.00 RT

DURABLE 4" WHITE LINE, POLYUREA (DASHED)
STA 355+50.00 - 357+48.75 LT

DURABLE 4" WHITE LINE, POLYUREA (DOTTED)
STA 355+50.00 - 356+10.00 RT
STA 359+00.00 - 361+43.32 LT

DURABLE LETTER OR SYMBOL, POLYUREA
STA 356+12.33 - 356+20.47 RT
STA 356+39.10 - 356+49.40 RT
STA 356+70.60 - 356+78.90 RT
STA 357+91.18 - 358+01.00 LT
STA 358+39.20 - 358+50.15 LT
STA 358+91.23 - 359+00.00 LT

DURABLE 24" STOP BAR, POLYUREA
STA 355+89.00 - 356+09.65 LT

DURABLE 8" YELLOW LINE, POLYUREA (SOLID)
STA 355+50.00 - 355+74.51 ℄
STA 356+02.76 - 356+96.85 ℄

DURABLE 8" WHITE LINE, POLYUREA (SOLID)
STA 355+56.29 - 358+00.00 FRT

DURABLE 4" YELLOW LINE, POLYUREA (SOLID)
STA 357+31.61 - 357+33.22 LT

PROJECT NAME: HARTFORD
PROJECT NUMBER: IM 091-2(79)

FILE NAME: sl2al32bdr_rte5_signs.dgn
PROJECT LEADER: K. HIGGINS
DESIGNED BY: W. LAMMER
US 5 SIGNS & PAVEMENT MARKINGS SHEET 3

PLOT DATE: 15-DEC-2014
DRAWN BY: K. FRIEDLAND
CHECKED BY: J. SALVATORI
SHEET 61 OF 166

**STATE OF VERMONT**
**AGENCY OF TRANSPORTATION**

# TRAFFIC SIGN SUMMARY SHEET

| MILEMARKER, STATION, OR SIGN NUMBER | SIGN LEGEND | SIGN DIMENSIONS | | | NEW & SALVAGED SIGNS | | | | EXIST POST | | NEW SIGN POSTS | | | | | | | | | | | | | | | | | | | | | | | REMARKS | SIGN DETAIL | | |
|---|---|---|---|---|---|---|---|---|---|---|---|---|---|---|---|---|---|---|---|---|---|---|---|---|---|---|---|---|---|---|---|---|---|---|---|---|
| | | EA | WIDTH (in) | HEIGHT (in) | "A" | "B" | SALV SIGN | SALV TIS | RETAIN | SALVAGE | NO. OF POSTS | FLANGED CHANNEL lb/ft | | | SQUARE STEEL (in) lb/ft | | | ANCHOR | SLEEVE | TUBULAR ALUMINUM Ø (in) lb/ft | | | FOUNDATION | TUBULAR STEEL Ø (in) lb/ft | | | | W-SHAPE STEEL FTG. SIZE | | WEIGHT | POST SIZE | SIGN REFLECTORIZED | | DETAIL IN SHSM | DETAIL ON SHEET NUMBER | STD. SHEET NUMBER |
| | | | | | | | | | | | | 1.12 | 2.0 | 3.0 | 1.88 | 2.42 | 3.35 | | | 1.3 | 1.7 | 1.7 | | 7.6 | 9.0 | 10.8 | 14.6 | 24" | 30" | | | | | | |
| | | | | | | | | | | | | OPTION ITEMS | | | | | | | | | | | | | | | | | | | | | | | | | |
| 349+00.00 LT | YIELD | 1 | 36 | 36 | 9.00 | | | | | | 1 | | | | | 15 | | X | | | | | | | | | | | | | | | | R1-2 | X | | |
| | | | | | | | | | | | | | | | | | | | | | | | | | | | | | | | | | | | | |
| 350+00.00 LT | ONLY | 1 | 30 | 36 | 7.50 | | | | | | 1 | | | | | 15 | | X | | | | | | | | | | | | | | | | VR-921 | | | E-145A |
| | | | | | | | | | | | | | | | | | | | | | | | | | | | | | | | | | | | | |
| 351+25.00 LT | SOUTH | 1 | | | | | X | | | | 2 | | | | | 30 | | X | | | | | | | | | | | | | | | | M3-3 | X | | |
| 351+25.00 LT | 5 | 1 | | | | | X | | | | | | | | | | | | | | | | | | | | | | | | | | | M1-4 | X | | |
| 351+25.00 LT | | 1 | | | | | X | | | | | | | | | | | | | | | | | | | | | | | | | | | M6-3 | X | | |
| 351+25.00 LT | SOUTH | 1 | | | | | X | | | | | | | | | | | | | | | | | | | | | | | | | | | M3-3 | X | | |
| 351+25.00 LT | 91 | 1 | | | | | X | | | | | | | | | | | | | | | | | | | | | | | | | | | M1-1 | X | | |
| 351+25.00 LT | | 1 | 21 | 15 | 2.19 | | | | | | | | | | | | | | | | | | | | | | | | | | | | | M6-1 | X | | |
| 351+25.00 LT | TO | 1 | | | | | X | | | | | | | | | | | | | | | | | | | | | | | | | | | M4-5 | X | | |
| 351+25.00 LT | 89 | 1 | | | | | X | | | | | | | | | | | | | | | | | | | | | | | | | | | M1-1 | X | | |
| 351+25.00 LT | | 1 | 21 | 15 | 2.19 | | X | | | | | | | | | | | | | | | | | | | | | | | | | | | M6-1 | X | | |
| | | | | | | | | | | | | | | | | | | | | | | | | | | | | | | | | | | | | |
| 353+25.00 LT | ONLY | 1 | 30 | 36 | 7.50 | | | | | | 1 | | | | | 15 | | X | | | | | | | | | | | | | | | | VR-921 | | | E-145A |
| | | | | | | | | | | | | | | | | | | | | | | | | | | | | | | | | | | | | |
| **SUB TOTALS** | | | | | SF 28.38 | SF | EA. 8.00 | SF | EA. 5.00 | | FT | FT | FT | FT | FT 75 | FT | | EA | LB | LB | LB | EA. | LB | LB | LB | LB | EA. | EA. | LB | | | | | | | |
| | | | | | SF | SF | EA. | SF | | | FT | | | FT | | | | | LB | | | EA. | LB | | | | EA. | EA. | LB | | | | | | | |

FINAL POST LENGTHS ARE TO BE DETERMINED IN THE FIELD. POST SIZES ARE COMPUTED BASED ON INFORMATION FURNISHED ON THE STANDARD SHEETS AND VTRANS "SIGN POST DESIGN GUIDELINE."
SHS = STANDARD HIGHWAY SIGNS

PROJECT NAME: HARTFORD
PROJECT NUMBER: IM 091-2(79)

FILE NAME: sl2al32tss_rte5.dgn
PROJECT LEADER: K. HIGGINS
DESIGNED BY: W. LAMMER
US-5 TRAFFIC SIGN SUMMARY SHEET 1

PLOT DATE: 15-DEC-2014
DRAWN BY: K. FRIEDLAND
CHECKED BY: J. SALVATORI
SHEET 62 OF 166

**STATE OF VERMONT**
**AGENCY OF TRANSPORTATION**

# TRAFFIC SIGN SUMMARY SHEET

| MILEMARKER, STATION, OR SIGN NUMBER | SIGN LEGEND | SIGN DIMENSIONS | | | NEW & SALVAGED SIGNS | | | | EXIST POST | | NEW SIGN POSTS | | | | | | | | | | | | | | | | | | | | | REMARKS | SIGN DETAIL | | |
|---|---|---|---|---|---|---|---|---|---|---|---|---|---|---|---|---|---|---|---|---|---|---|---|---|---|---|---|---|---|---|---|---|---|---|
| | | EA | WIDTH (in) | HEIGHT (in) | "A" | "B" | SALV SIGN | SALV TIS | RETAIN | SALVAGE | NO. OF POSTS | FLANGED CHANNEL lb/ft | | | SQUARE STEEL (in) lb/ft | | | ANCHOR | SLEEVE | TUBULAR ALUMINUM Ø (in) lb/ft | | | FOUNDATION | TUBULAR STEEL Ø (in) lb/ft | | | | W-SHAPE STEEL FTG. SIZE | | WEIGHT | POST SIZE | SIGN REMOVED | | DETAIL IN SHSM | DETAIL ON SHEET NUMBER | STD. SHEET NUMBER |
| | | | | | | | | | | | | 1.12 | 2.0 | 3.0 | 1.88 | 2.42 | 3.35 | | | 1.3 | 1.7 | 1.7 | | 7.6 | 9.0 | 10.8 | 14.6 | 24" | 30" | | | | | | |
| | | | | | | | | | | | | OPTION ITEMS | | | | | | | | | | | | | | | | | | | | | | | | |
| 353+60.50 RT | | 1 | 18 | 24 | 3.00 | | | | | | 1 | | | | | 15 | | X | | | | | | | | | | | | | | ONE POST FOR THREE SIGNS STA 353+60.50 RT (R4-7c) | X | | |
| 353+60.50 RT | | 2 | 18 | 18 | 4.50 | | | | | | | | | | | | | | | | | | | | | | | | | | | OMI-1 | X | | |
| | | | | | | | | | | | | | | | | | | | | | | | | | | | | | | | | | | | |
| 355+66.00 RT | | 1 | 18 | 24 | 3.00 | | | | | | 1 | | | | | 15 | | X | | | | | | | | | | | | | | ONE POST FOR THREE SIGNS STA 355+66.00 RT (R4-7c) | X | | |
| 355+66.00 RT | | 2 | 18 | 18 | 4.50 | | | | | | | | | | | | | | | | | | | | | | | | | | | OMI-1 | X | | |
| | | | | | | | | | | | | | | | | | | | | | | | | | | | | | | | | | | | |
| 356+10.00 RT | | 1 | 18 | 24 | 3.00 | | | | | | 1 | | | | | 15 | | X | | | | | | | | | | | | | | ONE POST FOR FOUR SIGNS STA 356+10.00 RT (R4-7c) | X | | |
| 356+10.00 RT | | 2 | 18 | 18 | 4.50 | | | | | | | | | | | | | | | | | | | | | | | | | | | OMI-1 | X | | |
| 356+10.00 RT | | 1 | 24 | 24 | 4.00 | | | | | | | | | | | | | | | | | | | | | | | | | | | R3-2 | X | | |
| | | | | | | | | | | | | | | | | | | | | | | | | | | | | | | | | | | | |
| 356+91.00 RT | LEFT LANE MUST TURN LEFT | 1 | 30 | 30 | 6.25 | | | | | | 1 | | | | | 15 | | X | | | | | | | | | | | | | | ONE POST FOR FOUR SIGNS STA 356+91.00 RT (R3-7L) | X | | |
| 356+91.00 RT | | 2 | 18 | 18 | 4.50 | | | | | | | | | | | | | | | | | | | | | | | | | | | OMI-1 | X | | |
| 356+91.00 RT | | 1 | 18 | 24 | 3.00 | | | | | | | | | | | | | | | | | | | | | | | | | | | R4-7c | X | | |
| | | | | | | | | | | | | | | | | | | | | | | | | | | | | | | | | | | | |
| | | | | | | | | | | | | | | | | | | | | | | | | | | | | | | | | | | | |
| | | | | | | | | | | | | | | | | | | | | | | | | | | | | | | | | | | | |
| **SUB TOTALS** | | SF | SF | EA. | SF | EA. | FT | FT | FT | FT | FT | FT | EA | LB | LB | LB | | LB | LB | LB | LB | | | | | | | | | | | | | |
| | | 40.25 | | | | 4.00 | | | | | 60 | | | | | | | | | | | | | | | | | | | | | | | | |
| **GRAND TOTALS** | | SF | SF | EA. | SF | EA. | FT | | | FT | | | | LB | | | EA. | LB | | | | EA. | EA. | LB | | | | | | | | | | |
| | | 68.63 | | 8.00 | | 9.00 | | | | 135 | | | | | | | | | | | | | | | | | | | | | | | | |

FINAL POST LENGTHS ARE TO BE DETERMINED IN THE FIELD. POST SIZES ARE COMPUTED BASED ON INFORMATION FURNISHED ON THE STANDARD SHEETS AND VTRANS "SIGN POST DESIGN GUIDELINE."
SHS = STANDARD HIGHWAY SIGNS

PROJECT NAME: HARTFORD
PROJECT NUMBER: IM 091-2(79)

FILE NAME: sl2al32tss_rte5.dgn
PROJECT LEADER: K. HIGGINS
DESIGNED BY: W. LAMMER
US-5 TRAFFIC SIGN SUMMARY SHEET 2

PLOT DATE: 15-DEC-2014
DRAWN BY: K. FRIEDLAND
CHECKED BY: J. SALVATORI
SHEET 63 OF 166

OFFSETS FOR GUARDRAIL FLARE

| STATION | OFFSET |
|---|---|
| STA 246+92.50 | 27.17' LT |
| STA 247+29.25 | 23.17' LT |
| STA 247+41.75 | 22.75' LT |
| STA 247+66.50 | 21.83' LT |
| STA 247+91.25 | 20.92' LT |
| STA 248+16.00 | 20.00' LT |
| STA 248+40.75 | 19.08' LT |
| STA 248+65.75 | 18.08' LT |
| STA 248+90.50 | 17.08' LT |
| STA 249+15.25 | 16.00' LT |

DELINEATOR W/STEEL POST (BLUE)
STA 246+90.00 LT
STA 247+04.00 RT

DELINEATOR W/STEEL POST (GREEN)
STA 149+17.00 RT
STA 251+92.00 LT

ANCHOR FOR STEEL BEAM RAIL
STA 149+34.00 RT
STA 249+42.00 FLT
STA 249+47.00 LT
STA 251+44.00 FLT
STA 251+49.00 LT
STA 251+75.00 LT

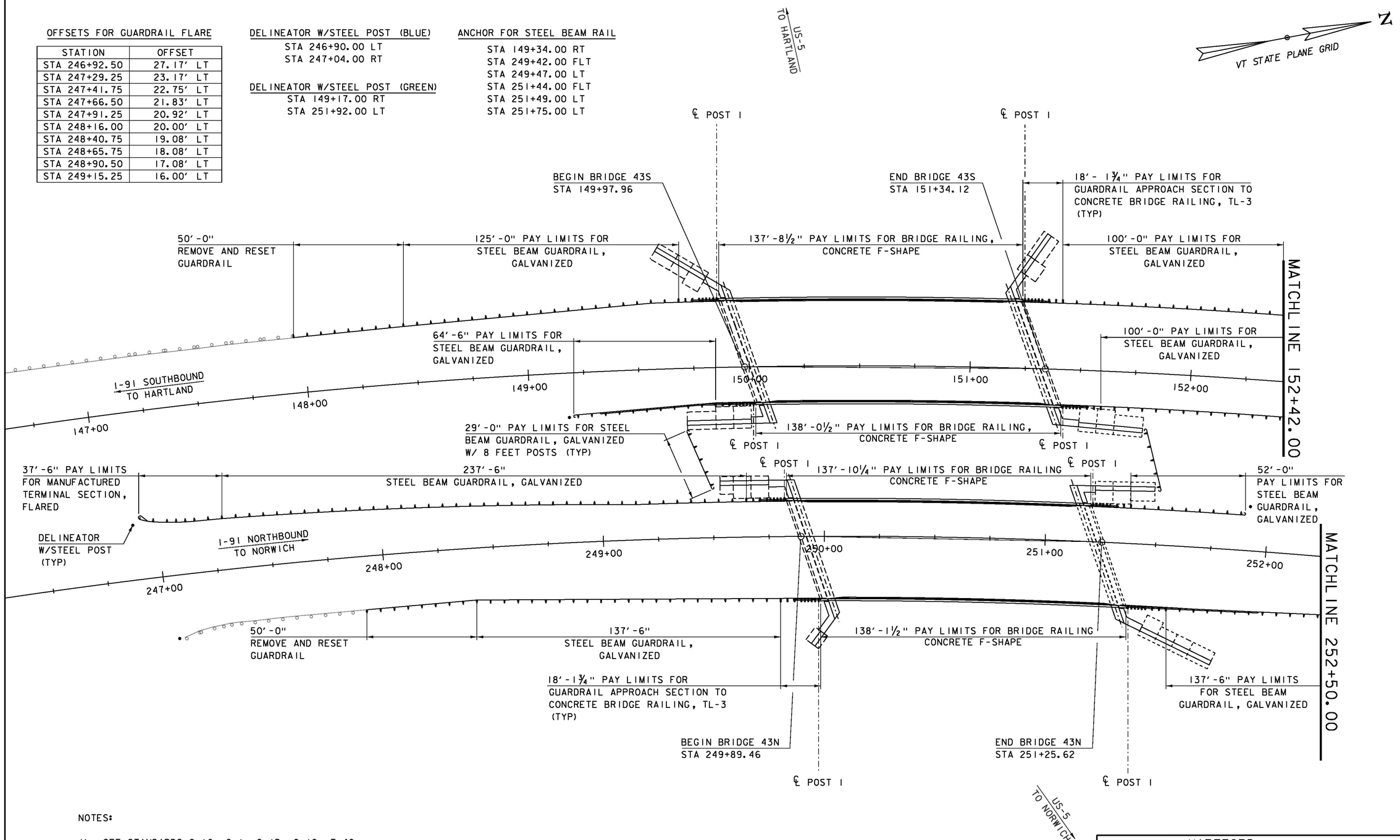


NOTES:

1) SEE STANDARDS C-10, G-1, G-1D, G-19, T-40, T-45, S-363 FOR FURTHER DETAILS.

2) OFFSETS GIVEN FOR GUARDRAIL FLARE ARE TO FACE OF RAIL.

## RAIL LAYOUT SHEET 1

SCALE 1" = 20'-0"
20 0 20

PROJECT NAME: HARTFORD
PROJECT NUMBER: IM 091-2(79)

FILE NAME: sl2al32bdr_rail.dgn
PROJECT LEADER: K. HIGGINS
DESIGNED BY: J. GRIGAS
RAIL LAYOUT SHEET 1

PLOT DATE: 15-DEC-2014
DRAWN BY: K. FRIEDLAND
CHECKED BY: J. SALVATORI
SHEET 64 OF 166

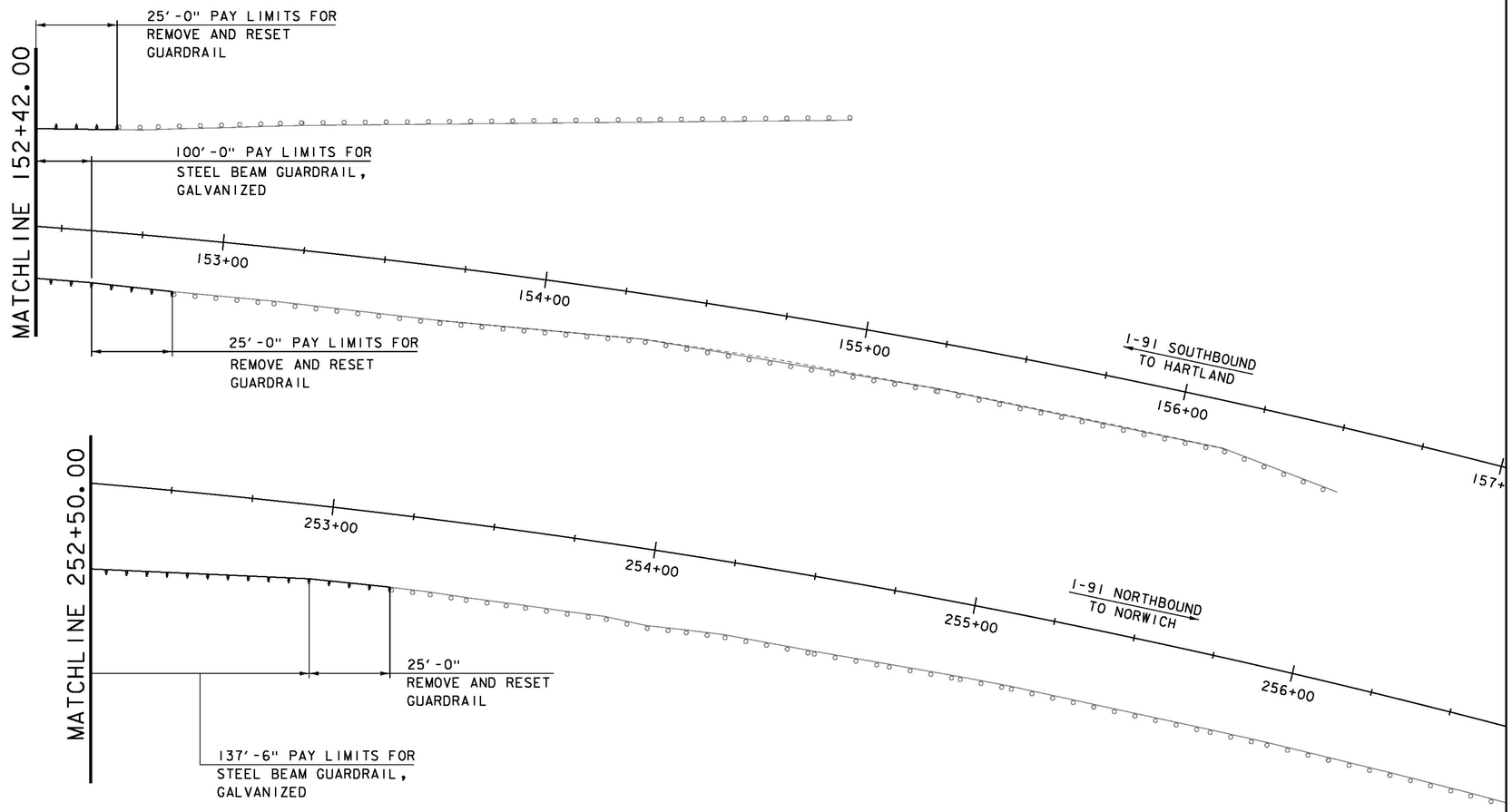


NOTES:

1) SEE STANDARDS C-10, G-1, G-1D, G-19, T-40, T-45, S-363 FOR FURTHER DETAILS.

## RAIL LAYOUT SHEET 2

SCALE 1" = 20'-0"
20 0 20

| | |
|---|---|
| PROJECT NAME: HARTFORD | |
| PROJECT NUMBER: IM 091-2(79) | |
| FILE NAME: si2al32bdr_rail.dgn | PLOT DATE: 15-DEC-2014 |
| PROJECT LEADER: K. HIGGINS | DRAWN BY: K. FRIEDLAND |
| DESIGNED BY: J. GRIGAS | CHECKED BY: J. SALVATORI |
| RAIL LAYOUT SHEET 2 | SHEET 65 OF 166 |

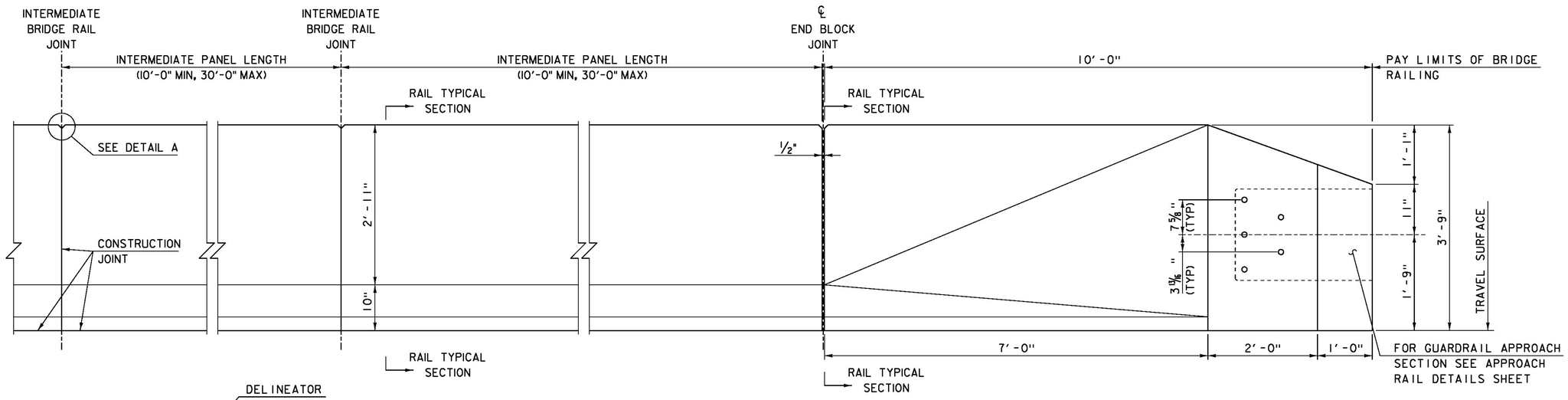


## RAILING ELEVATION
NOT TO SCALE

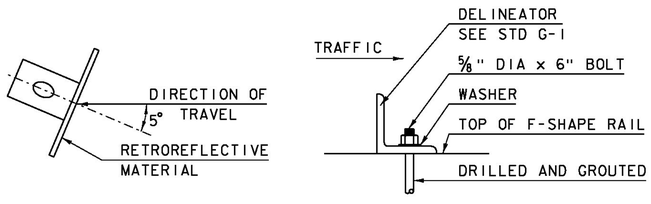


## DELINEATOR MOUNTING DETAILS
(NOT TO SCALE)

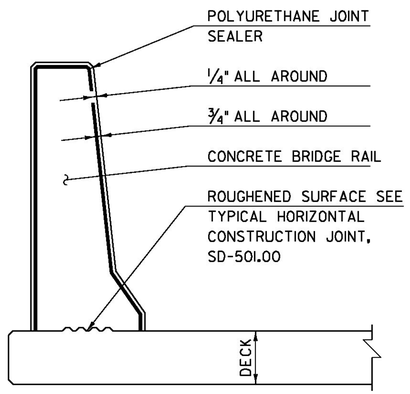


## BRIDGE RAIL JOINT SECTION
SCALE 1"=1'-0"

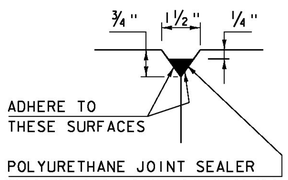


POLYURETHANE JOINT SEALER MEETING THE REQUIREMENTS OF SECTION 524. COLOR TO MATCH CONCRETE. PAYMENT TO BE INCIDENTAL TO THE BRIDGE RAIL ITEM

## DETAIL "A"
(NOT TO SCALE)

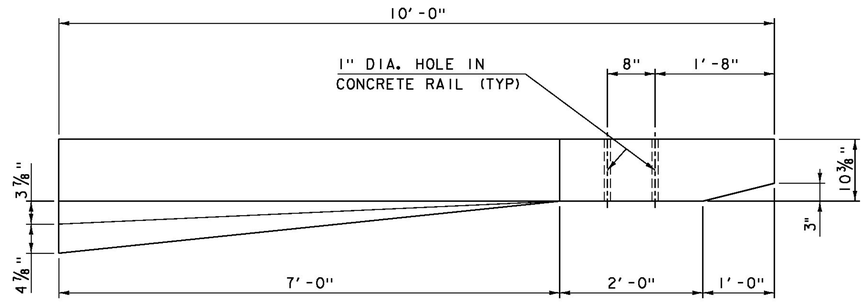


## END BLOCK PLAN
SCALE 1"=1'-0"

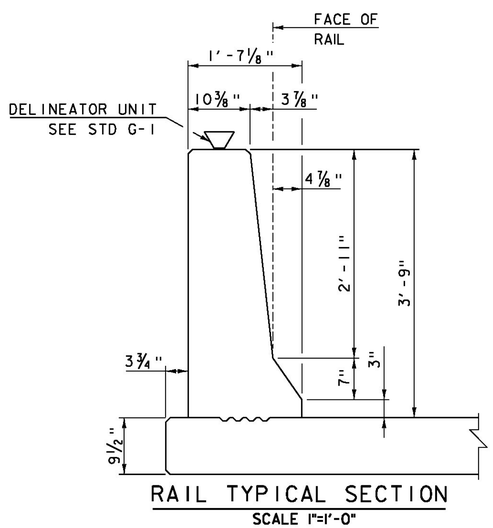


## RAIL TYPICAL SECTION
SCALE 1"=1'-0"

## CONCRETE RAIL JOINT NOTES

1. CONCRETE RAIL MAY BE PLACED IN ONE CONTINUOUS OPERATION IF AN APPROVED SHRINKAGE REDUCING ADMIXTURE LISTED IN THE SPECIAL PROVISIONS IS USED WITH THE CONCRETE MIX DESIGN. PAYMENT FOR THE SHRINKAGE REDUCING ADMIXTURE WILL BE INCIDENTAL TO THE BRIDGE RAIL CONCRETE ITEM.
2. WHEN BRIDGE RAIL JOINTS ARE USED THE PANELS SHALL BE PLACED IN ALTERNATE SECTIONS WITH A MINIMUM OF 48 HOUR DELAY BETWEEN ADJACENT PLACEMENTS.
3. REINFORCING STEEL SHALL EXTEND THROUGH THE RAIL JOINT.

NOTE:
EF = EACH FACE
3" CLEAR, UNLESS OTHERWISE SPECIFIED ON THE PLANS.
2'-2" BAR LAP UNLESS OTHERWISE SPECIFIED ON THE PLANS.
*** MATCH SLOPE OF NEAREST TRANSVERSE STEEL

NOTES:
1. ALL WORK AND MATERIALS SHALL CONFORM TO SECTION 525.
2. BRIDGE RAILING SHALL HAVE A RUBBED FINISH IN ACCORDANCE WITH SECTION 501.
3. SEE STANDARD DRAWING G-1 FOR DETAILS OF DELINEATORS. A DELINEATOR SHALL BE INSTALLED AT 30 FOOT SPACING. WHITE IS TO BE INSTALLED ON THE DRIVER'S RIGHT. FOR ONE WAY BRIDGES, YELLOW IS TO BE INSTALLED ON THE DRIVER'S LEFT. PAYMENT FOR DELINEATORS SHALL BE INCIDENTAL TO THE BRIDGE RAIL, CONCRETE F-SHAPE TL-5 ITEM.
4. PAYMENT FOR ALL MATERIALS INCLUDING REINFORCING STEEL SHALL INCLUDED IN THE BID PRICE FOR BRIDGE RAIL, CONCRETE F-SHAPE TL-5.

PROJECT NAME: HARTFORD
PROJECT NUMBER: IM 091-2(79)

FILE NAME: sl2al32rail_details.dgn
PROJECT LEADER: K. HIGGINS
DESIGNED BY: C. MOONEY
BRIDGE RAIL DETAILS

PLOT DATE: 15-DEC-2014
DRAWN BY: C. MOONEY
CHECKED BY: W. LAMMER
SHEET 66 OF 166

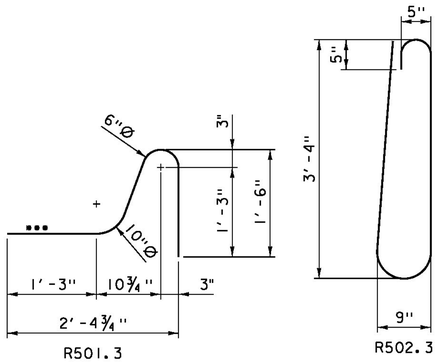


R501.3




R502.3

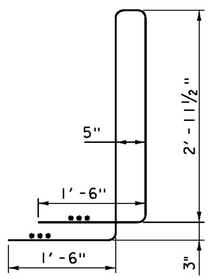


R503.3

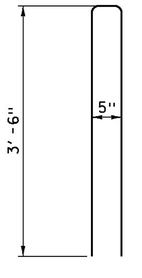


R504.3

## REINFORCING BAR BEND DETAILS
NOT TO SCALE

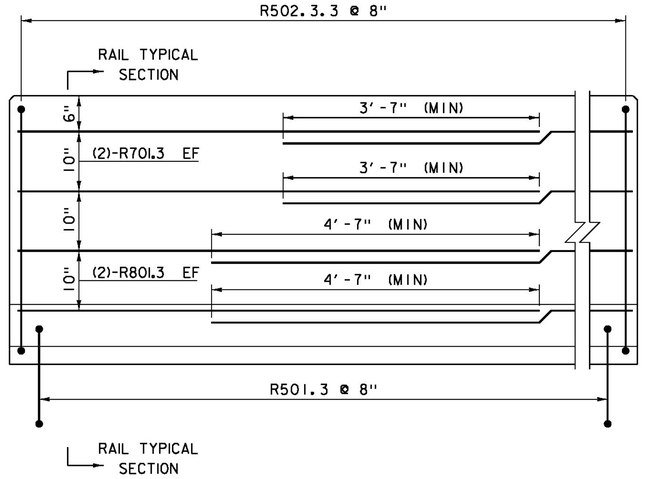


## INTERMEDIATE PANEL REINFORCING ELEVATION
NOT TO SCALE

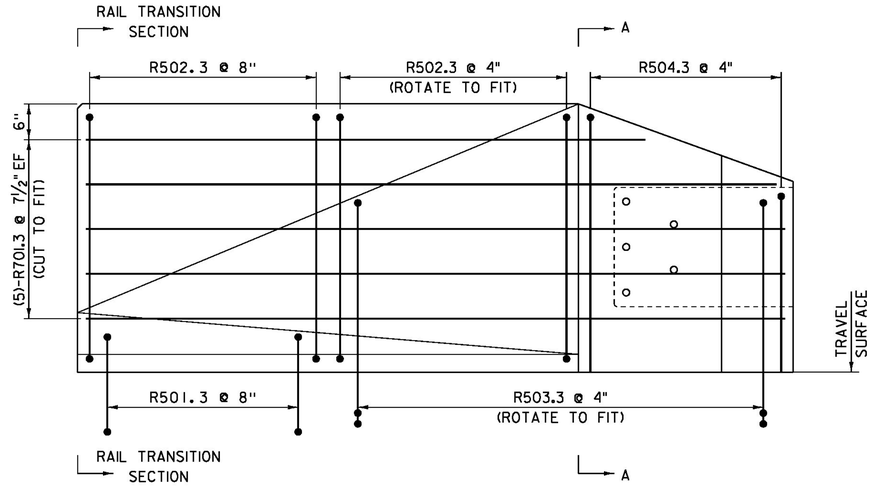


## END BLOCK REINFORCING ELEVATION
NOT TO SCALE

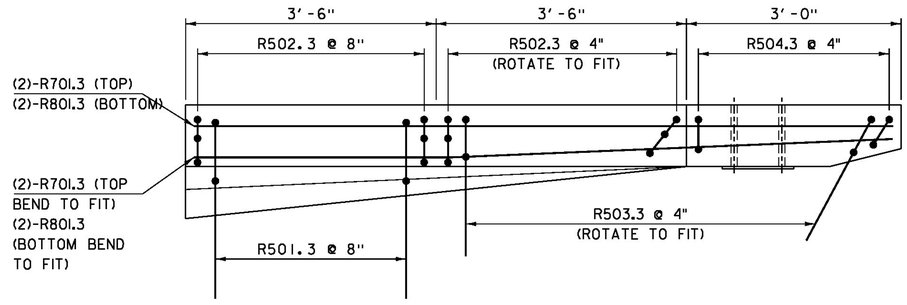


## END BLOCK REINFORCING PLAN
NOT TO SCALE

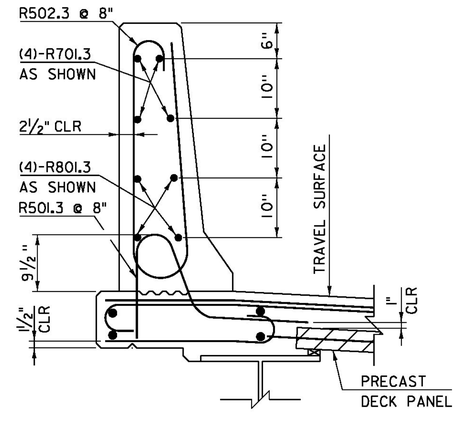


## RAIL TYPICAL REINFORCING SECTION
NOT TO SCALE

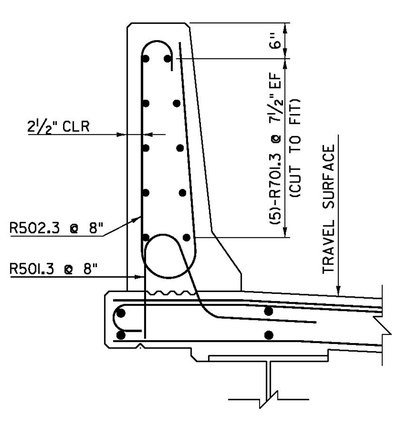


## RAIL TRANSITION SECTION
NOT TO SCALE

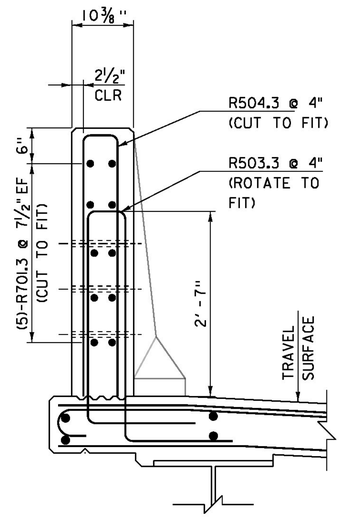


## SECTION A-A
NOT TO SCALE

NOTE:
EF = EACH FACE
3" CLEAR, UNLESS OTHERWISE SPECIFIED ON THE PLANS.
2'-2" BAR LAP UNLESS OTHERWISE SPECIFIED ON THE PLANS.
*** MATCH SLOPE OF NEAREST TRANSVERSE STEEL

## NOTES
1. ALL REINFORCING STEEL USED IN THE BRIDGE RAIL SHALL BE LEVEL III.

| | |
|---|---|
| PROJECT NAME: | HARTFORD |
| PROJECT NUMBER: | IM 091-2(79) |
| FILE NAME: sl2al32rail_details.dgn | PLOT DATE: 15-DEC-2014 |
| PROJECT LEADER: K. HIGGINS | DRAWN BY: C. MOONEY |
| DESIGNED BY: C. MOONEY | CHECKED BY: W. LAMMER |
| BRIDGE RAIL REINFORCING DETAILS | SHEET 67 OF 166 |

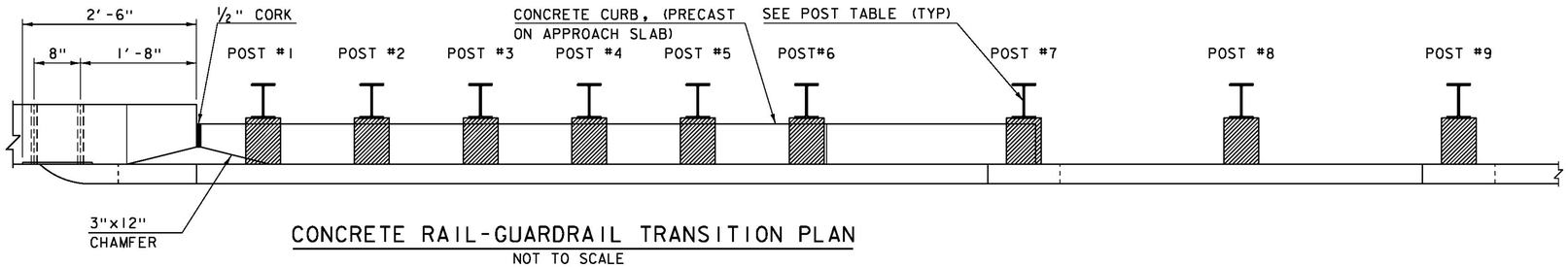


## CONCRETE RAIL-GUARDRAIL TRANSITION PLAN

NOT TO SCALE

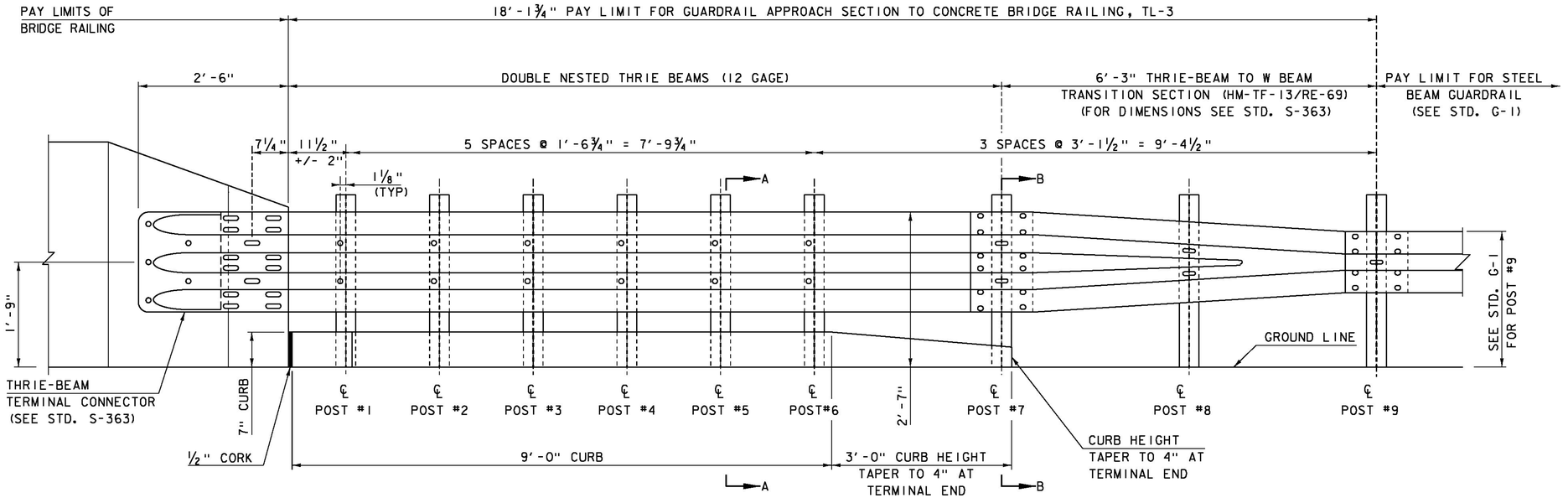


## CONCRETE RAIL-GUARDRAIL TRANSITION ELEVATION

NOT TO SCALE

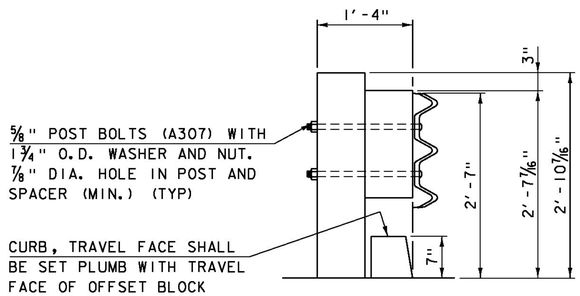


## SECTION A-A

NOT TO SCALE

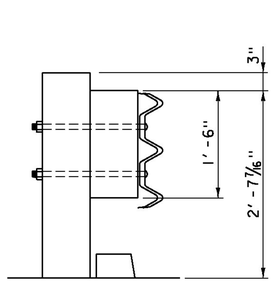


## SECTION B-B

NOT TO SCALE

| | | STEEL | WOOD |
|---|---|---|---|
| SECTION | | W6x9 | 6"X8" |
| OFFSET BLOCK | | 6"X8" WOOD | 6"X8" RECESSED WOOD |
| EMBEDMENT DEPTH | POST# 1-6 | 7'-0" | 7'-0" |
| | POST# 7&8 | 6'-0" | 6'-0" |
| | POST# 9 | SEE STD. G-1 | SEE STD. G-1 |

## POST TABLE

NOTES:

1. THRIE-BEAM TERMINAL CONNECTOR SHALL BE INCLUDED IN THE UNIT BID PRICE FOR GUARDRAIL APPROACH SECTION TO CONCRETE BRIDGE RAILING, TL-3.
2. UNLESS OTHERWISE DIRECTED BY THE ENGINEER, A COMPOSITE MATERIAL OFFSET BLOCK FROM THE APPROVED PRODUCTS LIST MAY BE SUBSTITUTED FOR A OFFSET BLOCK OF SIMILAR DIMENSIONS.
3. THIS APPROACH RAILING MEETS THE REQUIREMENTS FOR A NCHRP REPORT 350 TL-3 SERVICE LEVEL.
4. SEE STANDARDS C-10, G-1 AND S-363.

PROJECT NAME: HARTFORD
PROJECT NUMBER: IM 091-2(79)

FILE NAME: sl2al32rail_details.dgn
PROJECT LEADER: K. HIGGINS
DESIGNED BY: C. MOONEY
APPROACH RAIL DETAILS

PLOT DATE: 15-DEC-2014
DRAWN BY: C. MOONEY
CHECKED BY: W. LAMMER
SHEET 68 OF 166

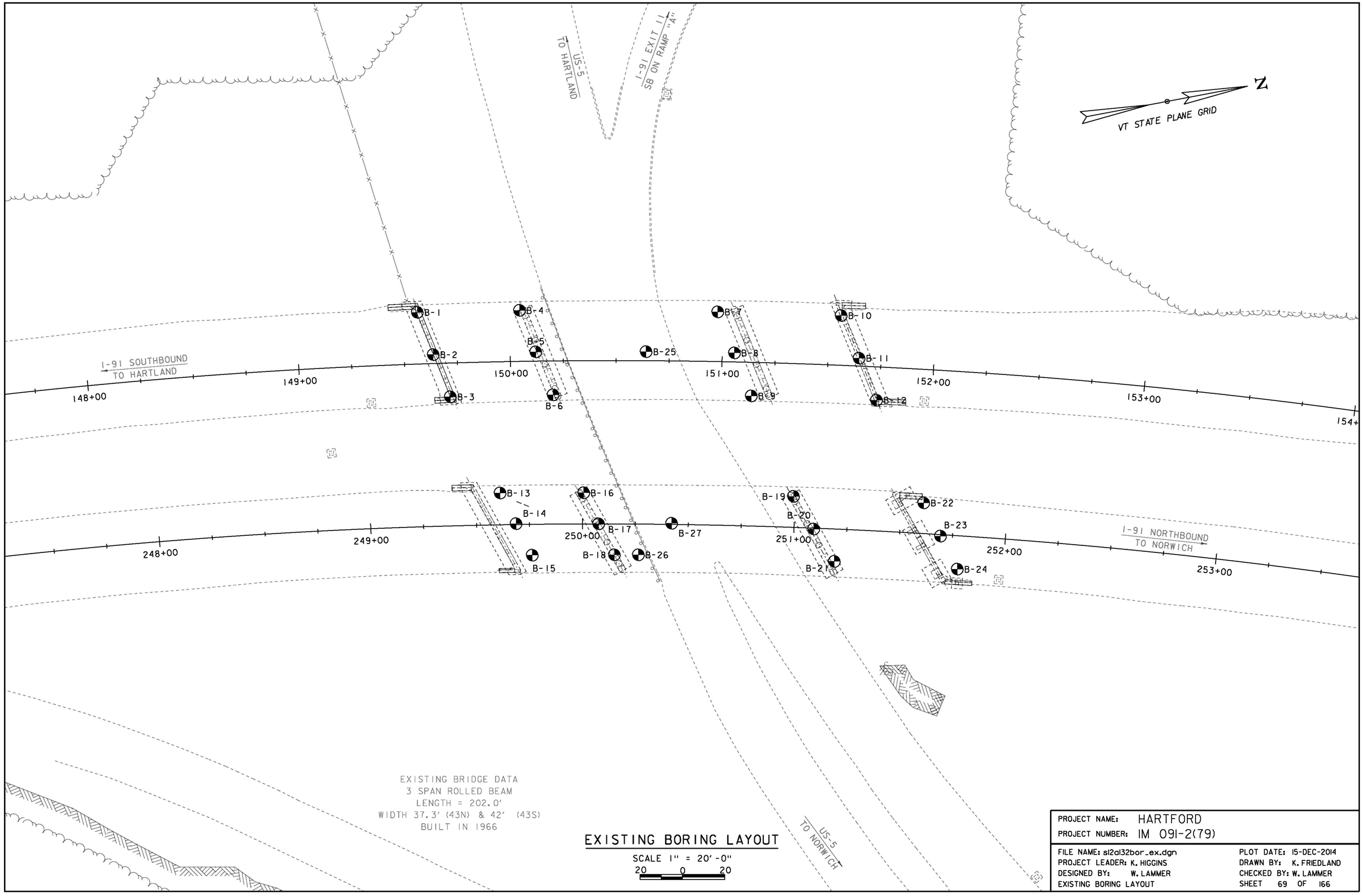


## EXISTING BORING LAYOUT

SCALE 1" = 20'-0"

20 0 20

| | |
|---|---|
| PROJECT NAME: | HARTFORD |
| PROJECT NUMBER: | IM 091-2(79) |
| FILE NAME: sl2al32bor_ex.dgn | PLOT DATE: 15-DEC-2014 |
| PROJECT LEADER: K. HIGGINS | DRAWN BY: K. FRIEDLAND |
| DESIGNED BY: W. LAMMER | CHECKED BY: W. LAMMER |
| EXISTING BORING LAYOUT | SHEET 69 OF 166 |

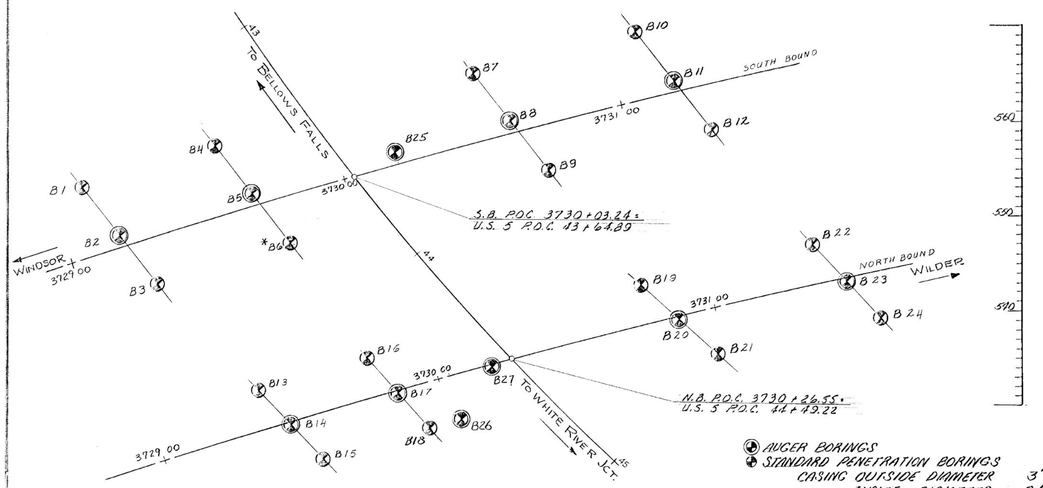


## BORING PLAN LAYOUT

SCALE 1"=20'-0

- AUGER BORINGS
- STANDARD PENETRATION BORINGS

| | |
|---|---|
| CASING OUTSIDE DIAMETER | 3" |
| INSIDE DIAMETER | 2½" |
| WEIGHT OF HAMMER | 350 # |
| HAMMER FALL | 24" |
| SAMPLER OUTSIDE DIAMETER | 2" |
| INSIDE DIAMETER | 1⅜" |
| WEIGHT OF HAMMER | 140 # |
| HAMMER FALL | 30" |

Additional Auger Borings (not plotted)

| Station | Offset | Ground Elevation | Depth to Bedrock or Refusal |
|---|---|---|---|
| 3731+30 NB | 16' Lt. | 561.8 | 14.0' |
| 3731+13 NB | 9' Rt. | 562.3 | 10.0' |
| 3731+51 NB | 33' Rt. | 563.4 | 10.0' |

| BORING NO | STATION | OFFSET FROM ℄ |
|---|---|---|
| | SOUTH BOUND | |
| B1 | 3729+12 | 24 Lt |
| B2 | 3729+19 | 4 Lt |
| B3 | 3729+26 | 16 Rt |
| B4 | 3729+60 | 24 Lt |
| B5 | 3729+67 | 4 Lt |
| *B6 | 3729+75 | 16 Rt |
| B7 | 3730+53 | 24 Lt |
| B8 | 3730+62 | 4 Lt |
| B9 | 3730+70 | 16 Rt |
| B10 | 3731+11 | 24 Lt |
| B11 | 3731+20 | 4 Lt |
| B12 | 3731+29 | 16 Rt |
| | NORTH BOUND | |
| B13 | 3729+39 | 14 Lt |
| B14 | 3729+46 | 1 Rt |
| B15 | 3729+53 | 16 Rt |
| B16 | 3729+78 | 14 Lt |
| B17 | 3729+85 | 1 Rt |
| B18 | 3729+92 | 16 Rt |
| B19 | 3730+77 | 14 Lt |
| B20 | 3730+87 | 1 Rt |
| B21 | 3730+97 | 16 Rt |
| B22 | 3731+38 | 14 Lt |
| B23 | 3731+47 | 1 Rt |
| B24 | 3731+56 | 16 Rt |

* BORINGS NOT TAKEN

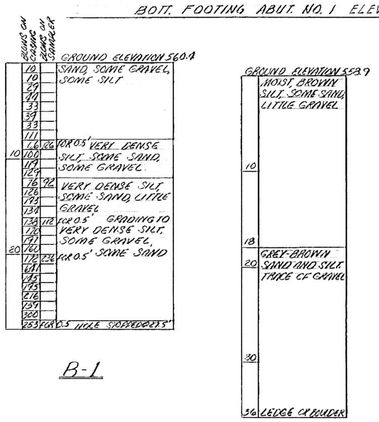


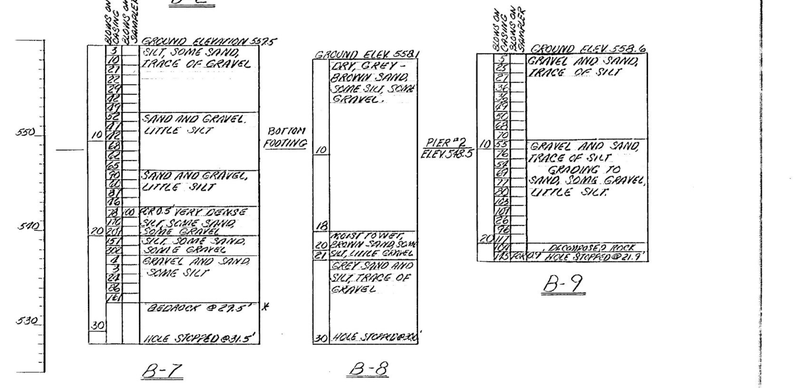


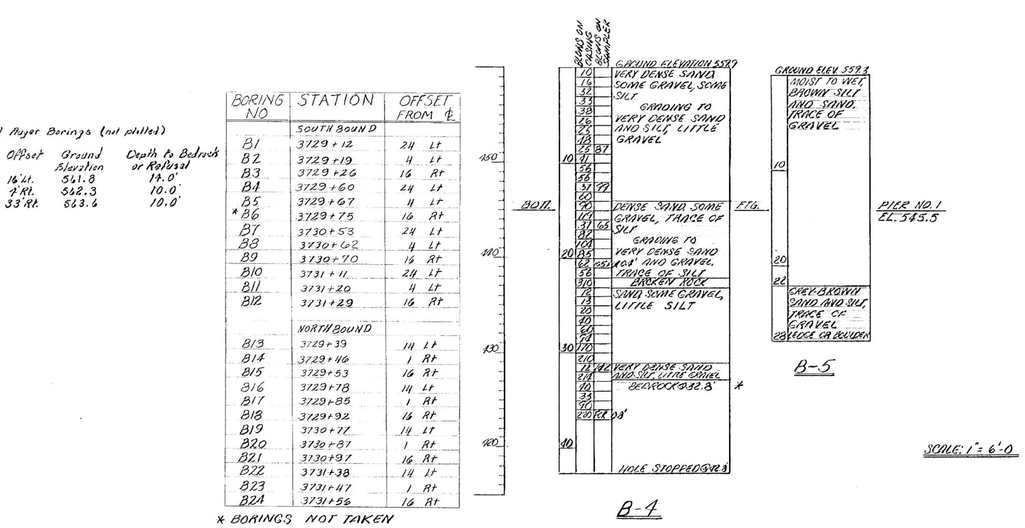


| ITEM NO. | ITEM | UNIT | NET | OVERRUN | TOTAL | FINAL |
|---|---|---|---|---|---|---|
| 106-A | CHAN. EXCAV. OF EARTH | C.Y. | | | | |
| 106-B | CHAN. EXCAV. OF ROCK | C.Y. | | | | |
| 106-C | UNCLASS. CHAN. EXCAV. | C.Y. | | | | |
| 107 | STRUCT. EXCAV. | C.Y. | | | | |
| 601-B | CONC. CLASS B (MOD.) | C.Y. | | | | |
| 602 | REINF. STEEL | LBS. | | | | |
| 607 | ASPHALTIC-ASB. COATING | S.Y. | | | | |
| 607-B | TREATED TIMBER PILING | L.F. | | | | |
| 608 | SPLICES FOR STEEL PILING | EA. | | | | |
| 501 | STEEL PILING | L.F. | | | | |
| 502-A | UNTREATED TIMBER PILING | L.F. | | | | |

STATE OF VERMONT
DEPARTMENT OF HIGHWAYS

TOWN OF HARTFORD
ROUTE NO. I-91 LOC. STA.
INTERSTATE OVER US 5
BORING PLAN
SCALE AS SHOWN
SURVEYED BY:
DRAWN BY Tessie, ASW CHECKED BY R.B.H. & R.L.O.
PROJECT NO. I 91-2 (2)
SHEET 92 OF 719

BR 104 of 124

## EXISTING BORING LOGS SHEET 1

NOT TO SCALE

| | |
|---|---|
| PROJECT NAME: | HARTFORD |
| PROJECT NUMBER: | IM 091-2(79) |
| FILE NAME: sl2al32bor_logs_ex.dgn | PLOT DATE: 15-DEC-2014 |
| PROJECT LEADER: K. HIGGINS | DRAWN BY: K. FRIEDLAND |
| DESIGNED BY: W. LAMMER | CHECKED BY: J. SALVATORI |
| EXISTING BORING LOGS SHEET 1 | SHEET 70 OF 166 |

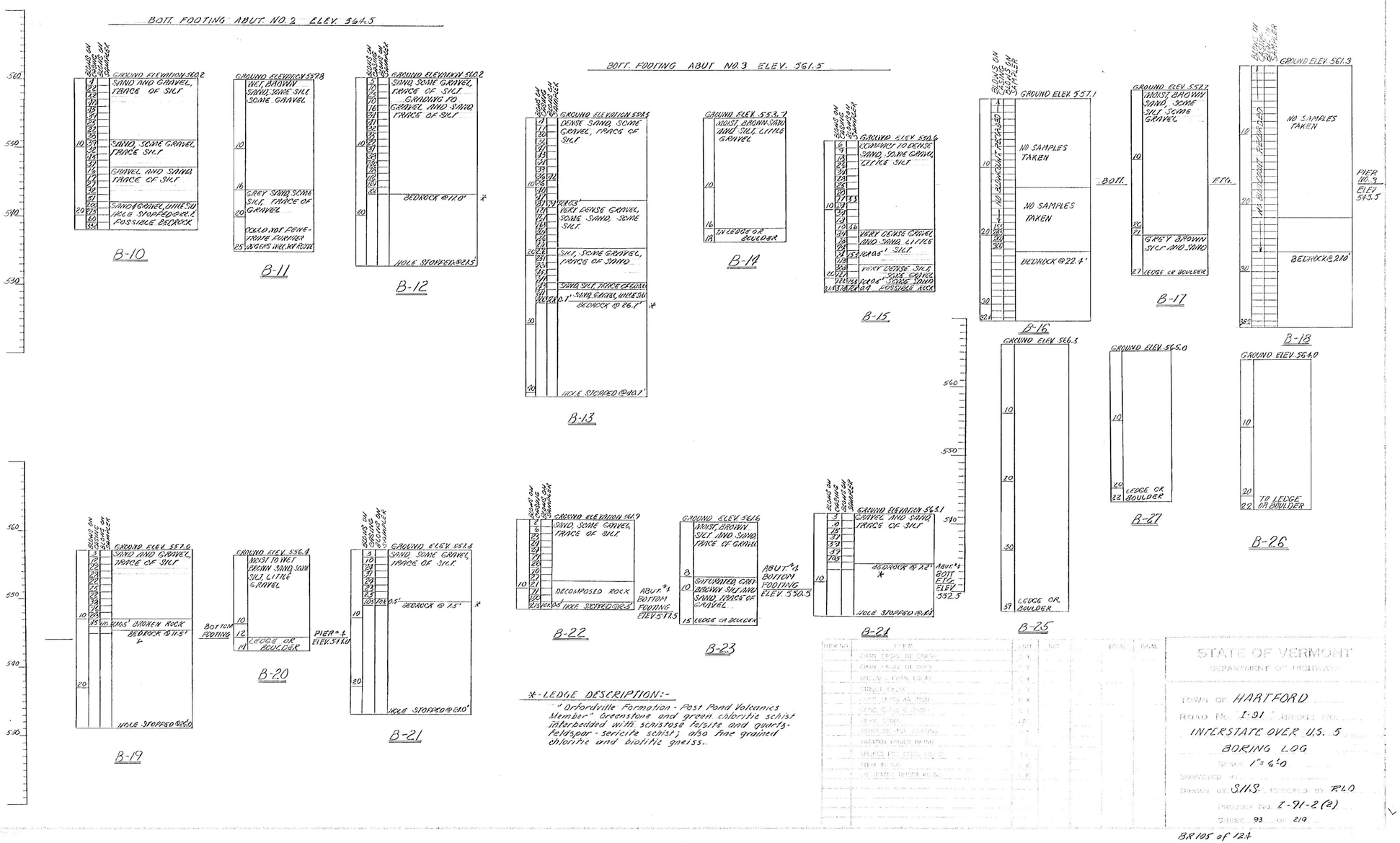


BR 105 of 124

# EXISTING BORING LOGS SHEET 2

NOT TO SCALE

| | |
|---|---|
| PROJECT NAME: | HARTFORD |
| PROJECT NUMBER: | IM 091-2(79) |
| FILE NAME: sl2al32bor_logs_ex.dgn | PLOT DATE: 15-DEC-2014 |
| PROJECT LEADER: K. HIGGINS | DRAWN BY: K. FRIEDLAND |
| DESIGNED BY: W. LAMMER | CHECKED BY: J. SALVATORI |
| EXISTING BORING LOGS SHEET 2 | SHEET 71 OF 166 |

## SOIL CLASSIFICATION

| AASHTO | |
|---|---|
| A1 | Gravel and Sand |
| A3 | Fine Sand |
| A2 | Silty or Clayey Gravel and Sand |
| A4 | Silty Soil - Low Compressibility |
| A5 | Silty Soil - Highly Compressible |
| A6 | Clayey Soil - Low Compressibility |
| A7 | Clayey Soil - Highly Compressible |

## ROCK QUALITY DESIGNATION

| R.Q.D. (%) | ROCK DESCRIPTION |
|---|---|
| <25 | Very Poor |
| 25 to 50 | Poor |
| 51 to 75 | Fair |
| 76 to 90 | Good |
| >90 | Excellent |

## SHEAR STRENGTH

| UNDRAINED SHEAR STRENGTH IN P.S.F. | CONSISTENCY |
|---|---|
| <250 | Very Soft |
| 250-500 | Soft |
| 500-1000 | Med. Stiff |
| 1000-2000 | Stiff |
| 2000-4000 | Very Stiff |
| >4000 | Hard |

## CORRELATION GUIDE OF "N" TO DENSITY/CONSISTENCY

| DENSITY (GRANULAR SOILS) | | CONSISTENCY (COHESIVE SOILS) | |
|---|---|---|---|
| N | DESCRIPTIVE TERM | N | DESCRIPTIVE TERM |
| <5 | Very Loose | <2 | Very Soft |
| 5-10 | Loose | 2-4 | Soft |
| 11-24 | Med. Dense | 5-8 | Med. Stiff |
| 25-50 | Dense | 9-15 | Stiff |
| >50 | Very Dense | 16-30 | Very Stiff |
| | | 31-60 | Hard |
| | | >60 | Very Hard |

## COMMONLY USED SYMBOLS

| | |
|---|---|
| ▼ | Water Elevation |
| ⊛ | Standard Penetration Boring |
| ⊕ | Auger Boring |
| ⊙ | Rod Sounding |
| S | Sample |
| N | Standard Penetration Test Blow Count Per Foot For: 2" O.D. Sampler 1 3/8" I.D. Sampler Hammer Weight Of 140 Lbs. Hammer Fall Of 30" |
| VS | Field Vane Shear Test |
| US | Undisturbed Soil Sample |
| B | Blast |
| DC | Diamond Core |
| MD | Mud Drill |
| WA | Wash Ahead |
| HSA | Hollow Stem Auger |
| AX | Core Size 1 1/8" |
| BX | Core Size 1 5/8" |
| NX | Core Size 2 1/8" |
| M | Double Tube Core Barrel Used |
| LL | Liquid Limit |
| PL | Plastic Limit |
| PI | Plasticity Index |
| NP | Non Plastic |
| w | Moisture Content (Dry Wgt. Basis) |
| D | Dry |
| M | Moist |
| MTW | Moist To Wet |
| W | Wet |
| Sat | Saturated |
| Bo | Boulder |
| Gr | Gravel |
| Sa | Sand |
| Si | Silt |
| Cl | Clay |
| HP | Hardpan |
| Le | Ledge |
| NLTD | No Ledge To Depth |
| CNPF | Can Not Penetrate Further |
| TLOB | Top of Ledge Or Boulder |
| NR | No Recovery |
| Rec. | Recovery |
| %Rec. | Percent Recovery |
| RQD | Rock Quality Designation |
| CBR | California Bearing Ratio |
| < | Less Than |
| > | Greater Than |
| R | Refusal (N > 100) |
| VTSPG | NAD83 - See Note 7 |

### COLOR

| | | | |
|---|---|---|---|
| blk | Black | pnk | Pink |
| bl | Blue | pu | Purple |
| brn | Brown | rd | Red |
| dk | Dark | tn | Tan |
| gry | Gray | wh | White |
| gn | Green | yel | Yellow |
| lt | Light | mltc | Multicolored |
| or | Orange | | |

## DEFINITIONS (AASHTO)

BEDROCK (LEDGE) - Rock in its native location of indefinite thickness.

BOULDER - A rock fragment with an average dimension > 12 inches.

COBBLE - Rock fragments with an average dimension between 3 and 12 inches.

GRAVEL - Rounded particles of rock < 3" and > 0.0787" (#10 sieve).

SAND - Particles of rock < 0.0787" (#10 sieve) and > 0.0029" (#200 sieve).

SILT - Soil < 0.0029" (#200 sieve), non or slightly plastic and exhibits no strength when air-dried.

CLAY - Fine grained soil, exhibits plasticity when moist and considerable strength when air-dried.

VARVED - Alternate layers of silt and clay.

HARDPAN - Extremely dense soil, cemented layer, not softened when wet.

MUCK - Soft organic soil (containing > 10% organic material.

MOISTURE CONTENT - Weight of water divided by dry weight of soil.

FLOWING SAND - Granular soil so saturated (loose) that it flows into drill casing during extraction of wash rod.

STRIKE - Angle from magnetic north to line of intersection of bed with a horizontal plane.

DIP - Inclination of bed with a horizontal plane.

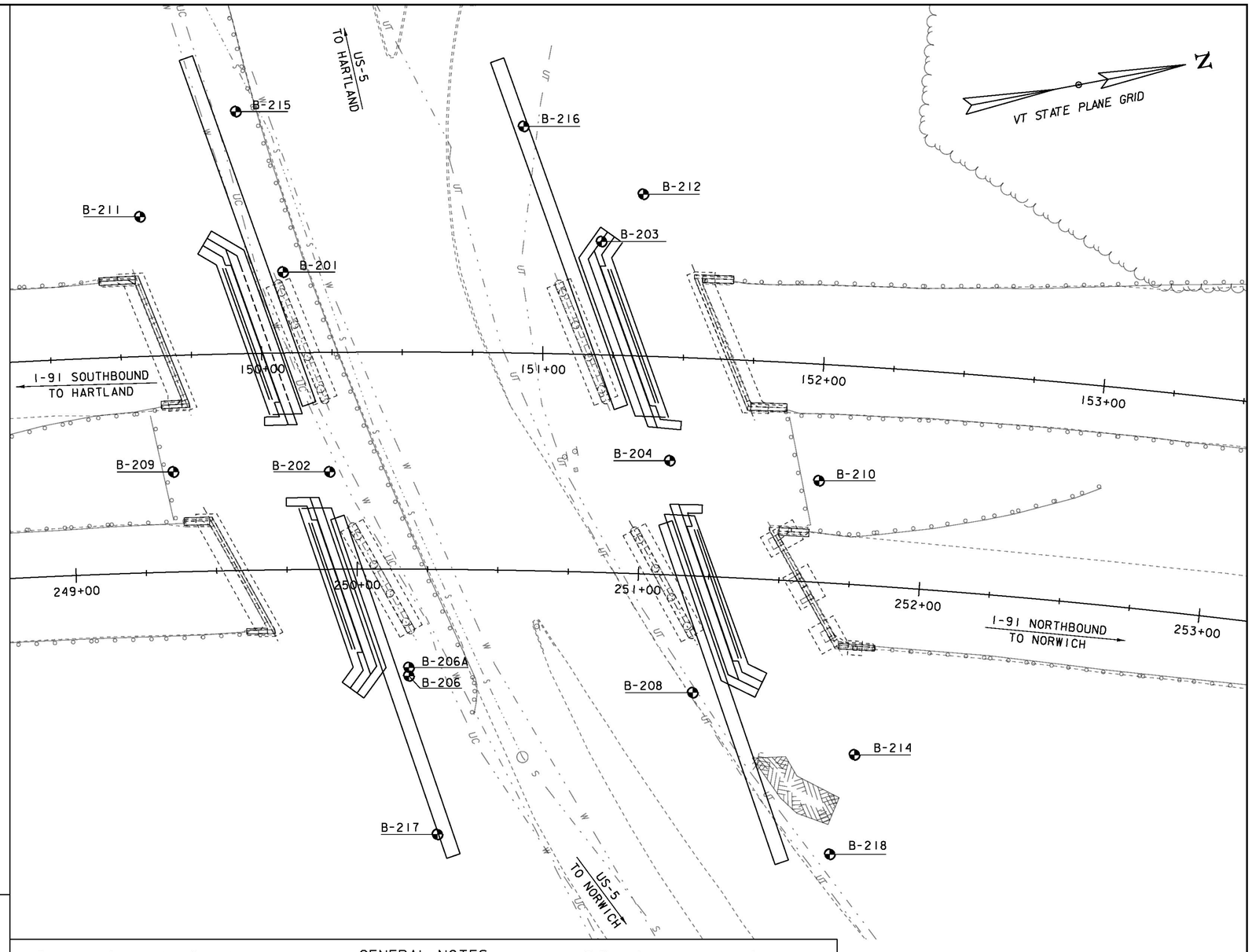


The subsurface explorations shown herein were made between 3/25/14 and 5/5 by the Agency.

Soil and rock classifications, properties and descriptions are based on engineering interpretation from available subsurface information by the Agency and may not necessarily reflect actual variations in subsurface conditions that may be encountered between individual boring or sample locations.

Observed water levels and/or conditions indicated are as recorded at the time of exploration and may vary according to the prevailing rainfall, methods of exploration and other factors.

## GENERAL NOTES

4. Engineering judgment was exercised in preparing the subsurface information presented herein. Analysis and interpretation of subsurface data was performed and interpreted for Agency design and estimating purposes. Presentation of the information in the Contract is intended to provide the Contractor access to the same data available to the Agency. The subsurface information is presented in good faith and is not intended as a substitute for personal investigation, independent interpretation, independent analysis or judgment by the Contractor.

5. Pictorial structure details shown on the boring plan layout or soils profile are for illustrative purposes only and may not accurately portray final contract details.

6. Terminology used on boring logs to describe the hardness, degree of weathering, and spacing of fractures, joints and other discontinuities in the bedrock is defined in the AASHTO Manual on Subsurface Investigations, 1988.

7. Northing and Easting coordinates are shown in Vermont State Plane Grid North American Datum 1983 in meters and survey feet.

## BORING LAYOUT SHEET

SCALE 1" = 20'-0"

20 0 20

PROJECT NAME: HARTFORD

PROJECT NUMBER: IM 091-2(79)

FILE NAME: sl2al32bor_new.dgn
PROJECT LEADER: K. HIGGINS
DESIGNED BY: W. LAMMER
BORING LAYOUT SHEET

PLOT DATE: 15-DEC-2014
DRAWN BY: W. LAMMER
CHECKED BY: J. SALVATORI
SHEET 72 OF 166

STATE OF VERMONT
AGENCY OF TRANSPORTATION
MATERIALS & RESEARCH SECTION
SUBSURFACE INFORMATION

# BORING LOG

Hartford, VT

I91 Bridge 43 N/S

Boring No.: B-201
Page No.: 1 of 2
Pin No.: s12a132
Checked By: ASP

Boring Crew: Drilex/Jason, MJR
Date Started: 3/31/14 Date Finished: 4/01/14
VTSPG NAD83: N 417499.15 ft E 1683209.44 ft
Station: 150+08.07 Offset: -28.75
Ground Elevation: 552.05 ft

| | Casing | Sampler |
|---|---|---|
| Type: | Auger/WB | SS |
| I.D.: | 4.5 in | 2 in |
| Hammer Wt: | 300 lb. | 140 lb. |
| Hammer Fall: | N.A. | 30 in. |
| Hammer/Rod Type: | | Auto |
| Rig: | CME 50 | CE = 1.33 |

| Groundwater Observations | | |
|---|---|---|
| Date | Depth (ft) | Notes |
| 04/01/14 | 0.0 | Due to water used |
| | | during drilling |
| | | |

| Depth (ft) | Strata (1) | CLASSIFICATION OF MATERIALS (Description) | Run (Dip deg.) | Core Rec. % (RQD %) | Drill Rate minutes/ft | Blows/6" (N Value) | Moisture Content % | Gravel % | Sand % | Fines % |
|---|---|---|---|---|---|---|---|---|---|---|
| 0.0 | | A-2-4, SaSiGr, Auger sample (FILL) | | | | | 19.1 | 19.6 | 54.2 | 26.2 |
| 2.5 | | | | | | | | | | |
| 5.0 | | A-2-4, SaSiGr, Rec. = 1.83 ft | | | | 8-17-19-20 (36) | 13.5 | 14.4 | 51.6 | 34.0 |
| 7.5 | | | | | | | | | | |
| 10.0 | | A-2-4, SaSiGr, Rec. = 1.5 ft | | | | 8-10-13-19 (23) | 14.4 | 19.7 | 48.8 | 31.5 |
| 12.5 | | | | | | | | | | |
| 15.0 | | A-2-4, GrSaSi, Rec. = 0.33 ft | | | | 17-30/2" (30+) | 12.1 | 35.3 | 33.9 | 30.8 |
| 17.5 | | | | | | | | | | |
| 20.0 | | A-4, SiSaGr, Rec. = 1.42 ft | | | | 10-24-32-46 (56) | 11.8 | 26.9 | 35.2 | 37.9 |
| 22.5 | | | | | | | | | | |

Notes:
1. Stratification lines represent approximate boundary between material types. Transition may be gradual.
2. N Values have not been corrected for hammer energy. CE is the hammer energy correction factor. CE is an estimated value.
3. Water level readings have been made at times and under conditions stated. Fluctuations of groundwater may occur due to other factors than those present at the time measurements were made.
4. Ground surface elevations indicated on the boring logs were estimated based on the grading plan provided by VAOT.

Terracon

STATE OF VERMONT
AGENCY OF TRANSPORTATION
MATERIALS & RESEARCH SECTION
SUBSURFACE INFORMATION

# BORING LOG

Hartford, VT

I91 Bridge 43 N/S

Boring No.: B-201
Page No.: 2 of 2
Pin No.: s12a132
Checked By: ASP

Boring Crew: Drilex/Jason, MJR
Date Started: 3/31/14 Date Finished: 4/01/14
VTSPG NAD83: N 417499.15 ft E 1683209.44 ft
Station: 150+08.07 Offset: -28.75
Ground Elevation: 552.05 ft

| | Casing | Sampler |
|---|---|---|
| Type: | Auger/WB | SS |
| I.D.: | 4.5 in | 2 in |
| Hammer Wt: | 300 lb. | 140 lb. |
| Hammer Fall: | N.A. | 30 in. |
| Hammer/Rod Type: | | Auto |
| Rig: | CME 50 | CE = 1.33 |

| Groundwater Observations | | |
|---|---|---|
| Date | Depth (ft) | Notes |
| 04/01/14 | 0.0 | Due to water used |
| | | during drilling |
| | | |

| Depth (ft) | Strata (1) | CLASSIFICATION OF MATERIALS (Description) | Run (Dip deg.) | Core Rec. % (RQD %) | Drill Rate minutes/ft | Blows/6" (N Value) | Moisture Content % | Gravel % | Sand % | Fines % |
|---|---|---|---|---|---|---|---|---|---|---|
| 25.0 | | A-2-4, SaSiGr, Rec. = 1.33 ft | | | | 27-32-55/5" (55+) | 11.3 | 28.5 | 36.7 | 34.8 |
| 27.5 | | Split spoon refusal, Weathered bedrock | | | | | | | | |
| 30.0 | | 29.5 ft – 35.5 ft, Gray-green ANDESITE, hard, fresh 45° and 30° joint sets, smooth, open, moderately close. Upper 7 inches and lower 6 inches highly fractured and weathered | 1 | 28 (11) | 2<br>1<br>0.75<br>0.75<br>0.5 | | | | | |
| 32.5 | | | | | | | | | | |
| 35.0 | | 35.5 ft – 39.5 ft, Gray-green ANDESITE, hard,slight weathering in top 9 inches, 45° and 75° joint sets, very close. Bottom 31 inches, fresh weathering, 80° and 45° joint sets, moderately close, tight. Thinly foliated.<br><br>Open hole coring changed to spin 4-inch casing to 39 feet. | 3 | 67 (56) | 3<br>2.5<br>3.5<br>2.5 | | | | | |
| 37.5 | | | | | | | | | | |
| 40.0 | | 39.0 ft – 44.0 ft, Gray-green ANDESITE, very hard, slight to moderate weathering, 85°, 0°, 45° joint sets, very close to moderately close, quartz infilling. | 5 | 87 (70) | 2<br>2<br>2<br>2.75<br>2.5 | | | | | |
| 42.5 | | | | | | | | | | |
| | | Hole stopped @ 44.0 ft | | | 3.5 | | | | | |
| 45.0 | | | | | | | | | | |
| 47.5 | | | | | | | | | | |

Notes:
1. Stratification lines represent approximate boundary between material types. Transition may be gradual.
2. N Values have not been corrected for hammer energy. CE is the hammer energy correction factor. CE is an estimated value.
3. Water level readings have been made at times and under conditions stated. Fluctuations of groundwater may occur due to other factors than those present at the time measurements were made.
4. Ground surface elevations indicated on the boring logs were estimated based on the grading plan provided by VAOT.

Terracon

2010 COPY J1145115.GPJ VERMONT AOT.GDT 5/30/14

| | |
|---|---|
| PROJECT NAME: | HARTFORD |
| PROJECT NUMBER: | IM 091-2(79) |
| FILE NAME: s12a132bor_new.dgn | PLOT DATE: 15-DEC-2014 |
| PROJECT LEADER: K. HIGGINS | DRAWN BY: W. LAMMER |
| DESIGNED BY: W. LAMMER | CHECKED BY: J. SALVATORI |
| BORING LOGS I | SHEET 73 OF 166 |

STATE OF VERMONT
AGENCY OF TRANSPORTATION
MATERIALS & RESEARCH SECTION
SUBSURFACE INFORMATION

# BORING LOG

**HARTFORD**
**IM 91-2(79)**
**I-91 BR-43**

Boring No.: **B-202**
Page No.: 1 of 1
Pin No.: 12A132
Checked By: BLS

Boring Crew: DAIGNEAULT, NIETO, HOOK
Date Started: 5/06/14 Date Finished: 5/07/14
VTSPG NAD83: N 417502.25 ft E 1683282.33 ft
Station: 150+23.81 Offset: 42.49
Ground Elevation: 551.6 ft

| | Casing | Sampler |
|---|---|---|
| Type: | WB | SS |
| I.D.: | 4 in | 1.5 in |
| Hammer Wt: | N.A. | 140 lb. |
| Hammer Fall: | N.A. | 30 in. |
| Hammer/Rod Type: | Auto/AWJ | |
| Rig: | CME 55 TRACK | $C_e$ = 1.46 |

Groundwater Observations

| Date | Depth (ft) | Notes |
|---|---|---|
| 05/07/14 | 5.1 | AM |
| | | |
| | | |

| Depth (ft) | Strata (1) | CLASSIFICATION OF MATERIALS (Description) | Run (Dip deg.) | Core Rec. % (ROD %) | Drill Rate minutes/ft | Blows/6" (N Value) | Moisture Content % | Gravel % | Sand % | Fines % |
|---|---|---|---|---|---|---|---|---|---|---|
| | | A-2-4, GrSiSa, brn, Moist, Rec. = 1.1 ft, Lab Note: Roots, grass, and Broken Rock were within sample. | | | | WH-2-4-11 (6) | 13.2 | 27.2 | 42.1 | 30.7 |
| | | Field Note:, Roller Coned ahead and cleaned out casing. | | | | | | | | |
| 5 | | A-2-4, SiGrSa, brn, MTW, Rec. = 1.0 ft, Lab Note: Broken Rock was within sample. | | | | 11-14-18-28 (32) | 13.2 | 33.0 | 37.5 | 29.5 |
| | | Field Note:, Roller Coned ahead and cleaned out casing. | | | | | | | | |
| 10 | | A-4, SaSi, gry, MTW, Rec. = 1.5 ft | | | | 19-31-39-R@1.0" (70) | 12.5 | 16.9 | 33.9 | 49.2 |
| | | Field Note:, Roller Coned ahead and cleaned out casing. | | | | | | | | |
| 15 | | A-4, GrSaSl, gry, MTW, Rec. = 1.0 ft, Lab Note: Broken Rock was within sample. | | | | 12-30-48-R@1.0" (78) | 11.5 | 25.0 | 28.2 | 46.8 |
| | | Field Note:, Roller Coned ahead and cleaned out casing. | | | | | | | | |
| 20 | | Visual Description:, Broken Rock with silty sand, gry, Moist, Rec. = 0.2 ft, Insufficient sample for testing. | | | | R@2.5" (R) | | | | |
| | | Field Note:, NXDC | | | | | | | | |
| 25 | | 25.0 ft - 30.0 ft, Dark-greenish-gray to medium-bluish-gray metamorphosed andesitic and basaltic Tuff, Moderately hard, Moderately weathered, Poor rock, NXMDC, Staining along fractures. RMR = 36 | 1 (85) | 36 (0) | 3 5 7 5 10 | Top of Bedrock @ 25.0 ft | | | | |
| 30 | | 30.0 ft - 35.0 ft, Dark-greenish-gray to medium-bluish-gray metamorphosed andesitic and basaltic Tuff, Moderately hard, Moderately weathered, Poor rock, NXMDC, Staining along fractures near end of run. RMR = 41 | 2 (85) | 100 (48) | 5 5 4 5 3 | | | | | |
| 35 | | Hole stopped @ 35.0 ft | | | | | | | | |
| 40 | | Remarks:<br>Hole collapsed at 7.0 ft. | | | | | | | | |
| 45 | | | | | | | | | | |

Notes:
1. Stratification lines represent approximate boundary between material types. Transition may be gradual.
2. N Values have not been corrected for hammer energy. $C_e$ is the hammer energy correction factor.
3. Water level readings have been made at times and under conditions stated. Fluctuations may occur due to other factors than those present at the time measurements were made.

BORING LOG 2 HARTFORD IM 91-2(79).GPJ VERMONT AOT.GDT 5/30/14

PROJECT NAME: HARTFORD
PROJECT NUMBER: IM 091-2(79)

FILE NAME: sl2al32bor_new.dgn
PROJECT LEADER: K. HIGGINS
DESIGNED BY: W. LAMMER
BORING LOGS 2

PLOT DATE: 15-DEC-2014
DRAWN BY: W. LAMMER
CHECKED BY: J. SALVATORI
SHEET 74 OF 166

STATE OF VERMONT
AGENCY OF TRANSPORTATION
MATERIALS & RESEARCH SECTION
SUBSURFACE INFORMATION

# BORING LOG

Hartford, VT

I91 Bridge 43 N/S

Boring No.: B-203
Page No.: 1 of 2
Pin No.: s12a132
Checked By: ASP

Boring Crew: Drilex/Jason, MJR
Date Started: 4/02/14 Date Finished: 4/02/14
VTSPG NAD83: N 417612.48 ft E 1683219.83 ft
Station: 151+19.83 Offset: -40.28
Ground Elevation: 559.25 ft

| | Casing | Sampler |
|---|---|---|
| Type: | Auger/WB | SS |
| I.D.: | 4.5 in | 2 in |
| Hammer Wt: | 300 lb. | 140 lb. |
| Hammer Fall: | N.A. | 30 in. |
| Hammer/Rod Type: | | Auto |
| Rig: | CME 50 | CE = 1.33 |

Groundwater Observations

| Date | Depth (ft) | Notes |
|---|---|---|
| 04/02/14 | 0.0 | Due to water used during drilling |

| Depth (ft) | Strata (1) | CLASSIFICATION OF MATERIALS (Description) | Run (Dip deg.) | Core Rec. % (RQD %) | Drill Rate minutes/ft | Blows/6" (N Value) | Moisture Content % | Gravel % | Sand % | Fines % |
|---|---|---|---|---|---|---|---|---|---|---|
| 2.5 | | | | | | | | | | |
| 5.0 | | A-1-b, SaGrSi, Rec. = 1.17 ft, (FILL) | | | | 47-21-19-27 (40) | 8.0 | 37.0 | 39.8 | 23.2 |
| 7.5 | | | | | | | | | | |
| 10.0 | | No recovery, Rec. = 0.0 ft, (FILL) | | | | 18-32-32-32 (64) | | | | |
| 12.5 | | | | | | | | | | |
| 15.0 | | A-1-b, GrSaSi, Rec. = 0.33 ft | | | | 7-8-8-9 (16) | 10.3 | 58.3 | 29.6 | 12.1 |
| 17.5 | | | | | | | | | | |
| 20.0 | | A-4, SiSaGr, Rec. = 1.08 ft | | | | 10-19-24-36 (43) | 10.9 | 25.0 | 35.7 | 39.3 |
| 22.5 | | Weathered bedrock | | | | | | | | |
| | | 23.0 ft – 28.0 ft, Gray/brown ANDESITE, hard, very slight weathering, 0°, 45°, 80° joint sets, smooth, close, extensive quartz filling of joints/foliation. | 1 | 75 (67) | 3<br>3 | | | | | |

Notes:
1. Stratification lines represent approximate boundary between material types. Transition may be gradual.
2. N Values have not been corrected for hammer energy. CE is the hammer energy correction factor. CE is an estimated value.
3. Water level readings have been made at times and under conditions stated. Fluctuations of groundwater may occur due to other factors than those present at the time measurements were made.
4. Ground surface elevations indicated on the boring logs were estimated based on the grading plan provided by VAOT.

Terracon

STATE OF VERMONT
AGENCY OF TRANSPORTATION
MATERIALS & RESEARCH SECTION
SUBSURFACE INFORMATION

# BORING LOG

Hartford, VT

I91 Bridge 43 N/S

Boring No.: B-203
Page No.: 2 of 2
Pin No.: s12a132
Checked By: ASP

Boring Crew: Drilex/Jason, MJR
Date Started: 4/02/14 Date Finished: 4/02/14
VTSPG NAD83: N 417612.48 ft E 1683219.83 ft
Station: 151+19.83 Offset: -40.28
Ground Elevation: 559.25 ft

| | Casing | Sampler |
|---|---|---|
| Type: | Auger/WB | SS |
| I.D.: | 4.5 in | 2 in |
| Hammer Wt: | 300 lb. | 140 lb. |
| Hammer Fall: | N.A. | 30 in. |
| Hammer/Rod Type: | | Auto |
| Rig: | CME 50 | CE = 1.33 |

Groundwater Observations

| Date | Depth (ft) | Notes |
|---|---|---|
| 04/02/14 | 0.0 | Due to water used during drilling |

| Depth (ft) | Strata (1) | CLASSIFICATION OF MATERIALS (Description) | Run (Dip deg.) | Core Rec. % (RQD %) | Drill Rate minutes/ft | Blows/6" (N Value) | Moisture Content % | Gravel % | Sand % | Fines % |
|---|---|---|---|---|---|---|---|---|---|---|
| 27.5 | | | | | 3.5<br>2<br>3.5 | | | | | |
| 30.0 | | 28.0 ft – 33.0 ft, Gray/brown ANDESITE, hard, very slight weathering, 0°, 45°, 80° joint sets, smooth, close, extensive quartz filling of joints/foliation. | 2 | 90 (67) | 2<br>2<br>2.75<br>2.5<br>5 | | | | | |
| 32.5 | | Hole stopped @ 33.0 ft | | | | | | | | |
| 35.0 | | | | | | | | | | |
| 37.5 | | | | | | | | | | |
| 40.0 | | | | | | | | | | |
| 42.5 | | | | | | | | | | |
| 45.0 | | | | | | | | | | |
| 47.5 | | | | | | | | | | |

Notes:
1. Stratification lines represent approximate boundary between material types. Transition may be gradual.
2. N Values have not been corrected for hammer energy. CE is the hammer energy correction factor. CE is an estimated value.
3. Water level readings have been made at times and under conditions stated. Fluctuations of groundwater may occur due to other factors than those present at the time measurements were made.
4. Ground surface elevations indicated on the boring logs were estimated based on the grading plan provided by VAOT.

Terracon

2010 COPY J1145115.GPJ VERMONT AOT.GDT 5/30/14

PROJECT NAME: HARTFORD
PROJECT NUMBER: IM 091-2(79)

FILE NAME: s12a132bor_new.dgn
PROJECT LEADER: K. HIGGINS
DESIGNED BY: W. LAMMER
BORING LOGS 3

PLOT DATE: 15-DEC-2014
DRAWN BY: W. LAMMER
CHECKED BY: J. SALVATORI
SHEET 75 OF 166

STATE OF VERMONT
AGENCY OF TRANSPORTATION
MATERIALS & RESEARCH SECTION
SUBSURFACE INFORMATION

# BORING LOG

**HARTFORD**
**IM 91-2(79)**
**I-91 BR-43**

Boring No.: **B-204**
Page No.: 1 of 1
Pin No.: 12A132
Checked By: BLS

Boring Crew: JUDKINS, HOOK
Date Started: 5/13/14 Date Finished: 5/15/14
VTSPG NAD83: N 417621.84 ft E 1683300.91 ft
Station: 151+46.59 Offset: 36.82
Ground Elevation: 556.94 ft

| | Casing | Sampler |
|---|---|---|
| Type: | WB | SS |
| I.D.: | 4 in | 1.5 in |
| Hammer Wt: | N.A. | 140 lb. |
| Hammer Fall: | N.A. | 30 in. |
| Hammer/Rod Type: | Auto/AWJ | |
| Rig: | CME 55 TRACK | $C_e$ = 1.46 |

Groundwater Observations

| Date | Depth (ft) | Notes |
|---|---|---|
| 05/14/14 | 4.9 | While drilling. |
| | | |
| | | |

| Depth (ft) | Strata (1) | CLASSIFICATION OF MATERIALS (Description) | Run (Dip deg.) | Core Rec. % (ROD %) | Drill Rate minutes/ft | Blows/6" (N Value) | Moisture Content % | Gravel % | Sand % | Fines % |
|---|---|---|---|---|---|---|---|---|---|---|
| | | A-1-a, SaGr with roots & grass, brn, Moist, Rec. = 0.6 ft, Lab Note: Broken Rock was within sample. | | | | | 4.6 | 53.4 | 33.0 | 13.6 |
| 5 | | Field Note:, Roller coned and cleaned out casing. | | | | | | | | |
| | | A-2-4, GrSa, brn, Moist, Rec. = 0.3 ft, Lab Note: Broken Rock was within sample. | | | | 12-20-16-17 (36) | 15.8 | 27.5 | 54.0 | 18.5 |
| 10 | | Field Note:, Roller coned and cleaned out casing. | | | | | | | | |
| | | A-4, SaGrSi, gry, Moist, Rec. = 0.8 ft, Lab Note: Broken Rock was within sample. | | | | 21-28-R@2.5" (R) | 10.5 | 30.0 | 26.4 | 43.6 |
| | | 11.8 ft - 14.0 ft, Dark-greenish-gray to medium-bluish-gray metamorphosed andesitic and basaltic Tuff, Moderately hard, Unweathered, Poor rock, NXDC, RMR = 36 | 1 (70) | 68 (0) | | Top of Bedrock @ 11.8 ft | | | | |
| 15 | | 14.0 ft - 19.0 ft, Dark-greenish-gray to medium-bluish-gray metamorphosed andesitic and basaltic Tuff, Moderately hard, Unweathered, Fair rock, NXMDC, RMR = 49 | 2 (70) | 88 (72) | 7<br>8<br>8<br>12<br>13 | | | | | |
| | | Hole stopped @ 19.0 ft | | | | | | | | |
| 20 | | Remarks:<br>Hole collapsed at 5.0 ft. | | | | | | | | |
| 25 | | | | | | | | | | |
| 30 | | | | | | | | | | |
| 35 | | | | | | | | | | |

Notes:
1. Stratification lines represent approximate boundary between material types. Transition may be gradual.
2. N Values have not been corrected for hammer energy. $C_e$ is the hammer energy correction factor.
3. Water level readings have been made at times and under conditions stated. Fluctuations may occur due to other factors than those present at the time measurements were made.

BORING LOG 2 HARTFORD IM 91-2(79).GPJ VERMONT AOT.GDT 5/30/14

PROJECT NAME: HARTFORD
PROJECT NUMBER: IM 091-2(79)

FILE NAME: sl2al32bor_new.dgn
PROJECT LEADER: K. HIGGINS
DESIGNED BY: W. LAMMER
BORING LOGS 4

PLOT DATE: 15-DEC-2014
DRAWN BY: W. LAMMER
CHECKED BY: J. SALVATORI
SHEET 76 OF 166

STATE OF VERMONT
AGENCY OF TRANSPORTATION
MATERIALS & RESEARCH SECTION
SUBSURFACE INFORMATION

# BORING LOG

Hartford, VT

I91 Bridge 43 N/S

Boring No.: B-206
Page No.: 1 of 2
Pin No.: s12a132
Checked By: ASP

Boring Crew: NTB/Mike Nadeau, MJR
Date Started: 3/25/14 Date Finished: 3/26/14
VTSPG NAD83: N 417516.45 ft E 1683358.85 ft
Station: 250+18.53 Offset: 37.94
Ground Elevation: 551.24 ft

| | Casing | Sampler |
|---|---|---|
| Type: | Auger/WB | SS |
| I.D.: | 4.5 in | 2 in |
| Hammer Wt: | 300 lb. | 140 lb. |
| Hammer Fall: | N.A. | 30 in. |
| Hammer/Rod Type: | | Auto |
| Rig: | CME 50 | CE = 1.33 |

Groundwater Observations

| Date | Depth (ft) | Notes |
|---|---|---|
| 03/26/14 | 11.4 | After casing removal |

| Depth (ft) | Strata (1) | CLASSIFICATION OF MATERIALS (Description) | Run (Dip deg.) | Core Rec. % (RQD %) | Drill Rate minutes/ft | Blows/6" (N Value) | Moisture Content % | Gravel % | Sand % | Fines % |
|---|---|---|---|---|---|---|---|---|---|---|
| 2.5 | | A-1-b, SaGrSi, Rec. = 1.17 ft, (FILL) | | | | 1-4-8-7 (12) | 15.6 | 32.0 | 48.7 | 19.3 |
| 5.0 | | A-2-4, SaGrSi, Rec. = 11.0 ft, (FILL) | | | | 8-8-6-8 (14) | 10.4 | 28.7 | 46.6 | 24.7 |
| 10.0 | | A-1-b, GrSaSi, Rec. = 0.5 ft | | | | 19-12-9-8 (21) | | 59.4 | 23.3 | 17.3 |
| 15.0 | | A-1-b, GrSaSi, Rec. = 10.8 ft | | | | 10-12-27-50/2" (39) | 11.6 | 39.8 | 39.6 | 20.6 |
| 17.5 | | | | | | | | | | |
| 20.0 | | | | | | | | | | |
| 22.5 | | | | | | | | | | |

Notes:
1. Stratification lines represent approximate boundary between material types. Transition may be gradual.
2. N Values have not been corrected for hammer energy. CE is the hammer energy correction factor. CE is an estimated value.
3. Water level readings have been made at times and under conditions stated.
Fluctuations of groundwater may occur due to other factors than those present at the time measurements were made.
4. Ground surface elevations indicated on the boring logs were estimated based on the grading plan provided by VAOT.

Terracon

2010 COPY J1145115.GPJ VERMONT AOT.GDT 5/30/14

STATE OF VERMONT
AGENCY OF TRANSPORTATION
MATERIALS & RESEARCH SECTION
SUBSURFACE INFORMATION

BORING LOG

Hartford, VT

I91 Bridge 43 N/S

Boring No.: B-206
Page No.: 2 of 2
Pin No.: s12a132
Checked By: ASP

Boring Crew: NTB/Mike Nadeau, MJR
Date Started: 3/25/14 Date Finished: 3/26/14
VTSPG NAD83: N 417516.45 ft E 1683358.85 ft
Station: 250+18.53 Offset: 37.94
Ground Elevation: 551.24 ft

| | Casing | Sampler |
|---|---|---|
| Type: | Auger/WB | SS |
| I.D.: | 4.5 in | 2 in |
| Hammer Wt: | 300 lb. | 140 lb. |
| Hammer Fall: | N.A. | 30 in. |
| Hammer/Rod Type: | | Auto |
| Rig: | CME 50 | CE = 1.33 |

Groundwater Observations

| Date | Depth (ft) | Notes |
|---|---|---|
| 03/26/14 | 11.4 | After casing removal |

| Depth (ft) | Strata (1) | CLASSIFICATION OF MATERIALS (Description) | Run (Dip deg.) | Core Rec. % (RQD %) | Drill Rate minutes/ft | Blows/6" (N Value) | Moisture Content % | Gravel % | Sand % | Fines % |
|---|---|---|---|---|---|---|---|---|---|---|
| 27.5 | | A-4, SlSaGr | | | | | 21.4 | 12.1 | 13.7 | 74.2 |
| | | Weathered bedrock | | | | | | | | |
| | | 26.5 ft – 28.5 ft, Gray-green ANDESITE, fresh, very hard, 45°, 75°, 20° joint sets, rough, open, moderately close, foliated. | 1 | 83 (83) | 3.75<br>4 | | | | | |
| | | Hole stopped @ 28.5 ft | | | | | | | | |
| 30.0 | | | | | | | | | | |
| 32.5 | | | | | | | | | | |
| 35.0 | | | | | | | | | | |
| 37.5 | | | | | | | | | | |
| 40.0 | | | | | | | | | | |
| 42.5 | | | | | | | | | | |
| 45.0 | | | | | | | | | | |
| 47.5 | | | | | | | | | | |

Notes:
1. Stratification lines represent approximate boundary between material types. Transition may be gradual.
2. N Values have not been corrected for hammer energy. CE is the hammer energy correction factor. CE is an estimated value.
3. Water level readings have been made at times and under conditions stated.
Fluctuations of groundwater may occur due to other factors than those present at the time measurements were made.
4. Ground surface elevations indicated on the boring logs were estimated based on the grading plan provided by VAOT.

Terracon

2010 COPY J1145115.GPJ VERMONT AOT.GDT 5/30/14

PROJECT NAME: HARTFORD
PROJECT NUMBER: IM 091-2(79)

FILE NAME: s12a132bor_new.dgn
PROJECT LEADER: K. HIGGINS
DESIGNED BY: W. LAMMER
BORING LOGS 5

PLOT DATE: 15-DEC-2014
DRAWN BY: W. LAMMER
CHECKED BY: J. SALVATORI
SHEET 77 OF 166

STATE OF VERMONT
AGENCY OF TRANSPORTATION
MATERIALS & RESEARCH SECTION
SUBSURFACE INFORMATION

# BORING LOG

Hartford, VT

191 Bridge 43 N/S

Boring No.: B-206A
Page No.: 1 of 2
Pin No.: s12a132
Checked By: ASP

Boring Crew: Drilex/Jason, MJR
Date Started: 3/31/14 Date Finished: 3/31/14
VTSPG NAD83: N 417516.45 ft E 1683355.85 ft
Station: 250+18.53 Offset: 34.94
Ground Elevation: 551.24 ft

| | Casing | Sampler |
|---|---|---|
| Type: | Auger/WB | SS |
| I.D.: | 4.5 in | 2 in |
| Hammer Wt: | 300 lb. | 140 lb. |
| Hammer Fall: | N.A. | 30 in. |
| Hammer/Rod Type: | | Auto |
| Rig: | CME 50 | CE = 1.33 |

| Groundwater Observations | | |
|---|---|---|
| Date | Depth (ft) | Notes |
| 03/26/14 | 11.4 | See B-206 |

| Depth (ft) | Strata (1) | CLASSIFICATION OF MATERIALS (Description) | Run (Dip deg.) | Core Rec. % (RQD %) | Drill Rate minutes/ft | Blows/6" (N Value) | Moisture Content % | Gravel % | Sand % | Fines % |
|---|---|---|---|---|---|---|---|---|---|---|
| 0.0 | | Augered to 22.5', 3 feet west of B-206, and began rock core at 22.5 feet. | | | | | | | | |
| 22.5 | | 22.5 ft – 27.5 ft, Gray-green ANDESITE, very hard, with phenocrysts, no foliation/bedding, 45° and 25° joint sets, smooth, fresh, moderately close. | 1 | 46 (17) | | | | | | |

Notes:
1. Stratification lines represent approximate boundary between material types. Transition may be gradual.
2. N Values have not been corrected for hammer energy. CE is the hammer energy correction factor. CE is an estimated value.
3. Water level readings have been made at times and under conditions stated. Fluctuations of groundwater may occur due to other factors than those present at the time measurements were made.
4. Ground surface elevations indicated on the boring logs were estimated based on the grading plan provided by VAOT.

Terracon

2010 COPY J114511S.GPJ VERMONT AOT.GDT 5/30/14

STATE OF VERMONT
AGENCY OF TRANSPORTATION
MATERIALS & RESEARCH SECTION
SUBSURFACE INFORMATION

BORING LOG

Hartford, VT

191 Bridge 43 N/S

Boring No.: B-206A
Page No.: 2 of 2
Pin No.: s12a132
Checked By: ASP

Boring Crew: Drilex/Jason, MJR
Date Started: 3/31/14 Date Finished: 3/31/14
VTSPG NAD83: N 417516.45 ft E 1683355.85 ft
Station: 250+18.53 Offset: 34.94
Ground Elevation: 551.24 ft

| | Casing | Sampler |
|---|---|---|
| Type: | Auger/WB | SS |
| I.D.: | 4.5 in | 2 in |
| Hammer Wt: | 300 lb. | 140 lb. |
| Hammer Fall: | N.A. | 30 in. |
| Hammer/Rod Type: | | Auto |
| Rig: | CME 50 | CE = 1.33 |

| Groundwater Observations | | |
|---|---|---|
| Date | Depth (ft) | Notes |
| 03/26/14 | 11.4 | See B-206 |

| Depth (ft) | Strata (1) | CLASSIFICATION OF MATERIALS (Description) | Run (Dip deg.) | Core Rec. % (RQD %) | Drill Rate minutes/ft | Blows/6" (N Value) | Moisture Content % | Gravel % | Sand % | Fines % |
|---|---|---|---|---|---|---|---|---|---|---|
| 27.5 | | 27.5 ft – 29.5 ft, Similar as above. | 2 | 25 (0) | | | | | | |
| 30.0 | | 29.5 ft – 32.5 ft, Similar as above. Lots of stops and starts due to poor circulation return/stoppages. | 3 | 77 (64) | 2.25<br>2.5<br>1.5 | | | | | |
| 32.5 | | Hole stopped @ 32.5 ft | | | | | | | | |

Notes:
1. Stratification lines represent approximate boundary between material types. Transition may be gradual.
2. N Values have not been corrected for hammer energy. CE is the hammer energy correction factor. CE is an estimated value.
3. Water level readings have been made at times and under conditions stated. Fluctuations of groundwater may occur due to other factors than those present at the time measurements were made.
4. Ground surface elevations indicated on the boring logs were estimated based on the grading plan provided by VAOT.

Terracon

2010 COPY J114511S.GPJ VERMONT AOT.GDT 6/2/14

PROJECT NAME: HARTFORD
PROJECT NUMBER: IM 091-2(79)

FILE NAME: s12a132bor_new.dgn
PROJECT LEADER: K. HIGGINS
DESIGNED BY: W. LAMMER
BORING LOGS 6

PLOT DATE: 15-DEC-2014
DRAWN BY: W. LAMMER
CHECKED BY: J. SALVATORI
SHEET 78 OF 166

STATE OF VERMONT
AGENCY OF TRANSPORTATION
MATERIALS & RESEARCH SECTION
SUBSURFACE INFORMATION

# BORING LOG

Hartford, VT

I91 Bridge 43 N/S

Boring No.: B-208
Page No.: 1 of 1
Pin No.: s12a132
Checked By: ASP

Boring Crew: Drilex/Jason, MJR
Date Started: 4/02/14 Date Finished: 4/03/14
VTSPG NAD83: N 417615.23 ft E 1683383.96 ft
Station: 251+21.16 Offset: 41.48
Ground Elevation: 546.61 ft

| | Casing | Sampler |
|---|---|---|
| Type: | Auger/WB | SS |
| I.D.: | 4.5 in | 2 in |
| Hammer Wt: | 300 lb. | 140 lb. |
| Hammer Fall: | N.A. | 30 in. |
| Hammer/Rod Type: | | Auto |
| Rig: | CME 50 | CE = 1.33 |

| Groundwater Observations | | |
|---|---|---|
| Date | Depth (ft) | Notes |
| 04/03/14 | 0.0 | Due to water used during drilling |

| Depth (ft) | Strata (1) | CLASSIFICATION OF MATERIALS (Description) | Run (Dip deg.) | Core Rec. % (RQD %) | Drill Rate minutes/ft | Blows/6" (N Value) | Moisture Content % | Gravel % | Sand % | Fines % |
|---|---|---|---|---|---|---|---|---|---|---|
| | | Spin 4" casing to 12", start coring at 14" | | | | | | | | |
| 2.5 | | 1.0 ft – 5.0 ft, Gray-green ANDESITE, hard, fresh, joints moderately close, rough, some smooth surfaces; foliation near vertical . | 1 | 91 (89) | 2.75<br>2.5<br>2.5<br>2 | | | | | |
| 5.0 | | 5.0 ft – 9.0 ft, Similar as above, very slight weathering, near vertical foliation, joint set at 45°, hard, close, smooth. | 2 | 93 (85) | 2.5<br>2.75<br>2.5<br>2.75 | | | | | |
| 7.5 | | | | | | | | | | |
| 10.0 | | 9.0 ft – 10.0 ft, Similar as above, 45° joint set. | 3 | 100 (68) | 3 | | | | | |
| 12.5 | | 10.0 ft – 15.0 ft, Similar as above, severe vertical fracturing in upper 2 feet, moderately weathered, open to closed, vertical foliation with quartz filling. | 4 | 100 (65) | 2.3<br>3<br>3<br>3.3<br>5.2 | | | | | |
| 15.0 | | | | | | | | | | |
| 17.5 | | 15.0 ft – 20.0 ft, Similar as above, hard, 45° joint set, open to closed, moderate to fresh weathering, vertical to near vertical foliation with quartz filling. | 5 | 100 (66) | 2.7<br>2.7<br>2.2<br>2.3<br>2.6 | | | | | |
| 20.0 | | Hole stopped @ 20.0 ft | | | | | | | | |
| 22.5 | | | | | | | | | | |

Notes:
1. Stratification lines represent approximate boundary between material types. Transition may be gradual.
2. N Values have not been corrected for hammer energy. CE is the hammer energy correction factor. CE is an estimated value.
3. Water level readings have been made at times and under conditions stated. Fluctuations of groundwater may occur due to other factors than those present at the time measurements were made.
4. Ground surface elevations indicated on the boring logs were estimated based on the grading plan provided by VAOT.

Terracon

2010 COPY J114515.GPJ VERMONT AOT.GDT 5/30/14

STATE OF VERMONT
AGENCY OF TRANSPORTATION
MATERIALS & RESEARCH SECTION
SUBSURFACE INFORMATION

# BORING LOG

**HARTFORD**
**IM 91-2(79)**
**I-91 BR-43**

Boring No.: **B-209**
Page No.: 1 of 1
Pin No.: 12A132
Checked By: BLS

Boring Crew: DAIGNEAULT, NIETO, JUDKINS
Date Started: 5/07/14 Date Finished: 5/08/14
VTSPG NAD83: N 417447.61 ft E 1683272.04 ft
Station: 149+67.32 Offset: 41.40
Ground Elevation: 573.65 ft

| | Casing | Sampler |
|---|---|---|
| Type: | WB | SS |
| I.D.: | 4 in | 1.5 in |
| Hammer Wt: | N.A. | 140 lb. |
| Hammer Fall: | N.A. | 30 in. |
| Hammer/Rod Type: | | Auto/AWJ |
| Rig: | CME 55 TRACK | $C_e$ = 1.46 |

| Groundwater Observations | | |
|---|---|---|
| Date | Depth (ft) | Notes |
| 05/08/14 | 26.7 | AM |

| Depth (ft) | Strata (1) | CLASSIFICATION OF MATERIALS (Description) | Run (Dip deg.) | Core Rec. % (RQD %) | Drill Rate minutes/ft | Blows/6" (N Value) | Moisture Content % | Gravel % | Sand % | Fines % |
|---|---|---|---|---|---|---|---|---|---|---|
| | | A-1-b, GrSa, brn, Moist, Rec. = 1.1 ft | | | | 1-2-4-6 (6) | 5.1 | 43.1 | 47.9 | 9.0 |
| 5 | | Field Note:, Roller Coned ahead and cleaned out casing.<br>A-1-b, GrSa, brn, Moist, Rec. = 0.7 ft, Lab Note: Broken Rock was within sample. | | | | 8-6-7-9 (13) | 11.1 | 42.1 | 44.1 | 13.8 |
| 10 | | Field Note:, Roller Coned ahead and cleaned out casing.<br>Visual Description:, GrSa with some Broken Rock, brn, Moist, Rec. = 0.3 ft, Rock stuck in sampler. Insufficient sample for testing. | | | | 8-12-16-19 (28) | 7.9 | | | |
| 15 | | A-2-4, Sa, Lt/brn, Moist, Rec. = 1.5 ft | | | | 13-14-17-15 (31) | 11.9 | 2.2 | 80.7 | 17.1 |
| 20 | | Field Note:, Roller Coned ahead and cleaned out casing.<br>A-2-4, GrSiSa, brn, Moist, Rec. = 1.3 ft, Lab Note: Broken Rock was within sample. | | | | 13-13-15-16 (28) | 13.2 | 24.1 | 47.8 | 28.1 |
| 25 | | Field Note:, Roller Coned ahead and cleaned out casing.<br>A-2-4, SiSa, brn, Moist, Rec. = 1.3 ft, Lab Note: Broken Rock was within sample. | | | | 8-9-15-14 (24) | 13.6 | 19.2 | 51.1 | 29.7 |
| 30 | | Field Note:, Roller Coned ahead and cleaned out casing.<br>A-2-4, SiGrSa, brn, Moist, Rec. = 0.9 ft, Lab Note: Broken Rock was within sample. | | | | 24-22-22-14 (44) | 12.4 | 37.1 | 39.5 | 23.4 |
| 35 | | 35.0 ft - 40.0 ft, Dark-greenish-gray to medium-bluish-gray metamorphosed andesitic and basaltic Tuff, Moderately hard, Unweathered, Poor rock, NXMDC, Near vertical fracture from 36.25' to 39.2'. RMR = 36 | 1 (85) | 84 (18) | 6<br>7<br>6<br>5<br>6 | Top of Bedrock @ 35.0 ft | | | | |
| 40 | | Hole stopped @ 40.0 ft | | | | | | | | |
| 45 | | Remarks:<br>Hole collapsed at 27.1 ft. | | | | | | | | |

Notes:
1. Stratification lines represent approximate boundary between material types. Transition may be gradual.
2. N Values have not been corrected for hammer energy. C is the hammer energy correction factor.
3. Water level readings have been made at times and under conditions stated. Fluctuations may occur due to other factors than those present at the time measurements were made.

BORING LOG 2 HARTFORD IM 91-2(79).GPJ VERMONT AOT.GDT 5/30/14

PROJECT NAME: HARTFORD
PROJECT NUMBER: IM 091-2(79)

FILE NAME: s12a132bor_new.dgn
PROJECT LEADER: K. HIGGINS
DESIGNED BY: W. LAMMER
BORING LOGS 7

PLOT DATE: 15-DEC-2014
DRAWN BY: W. LAMMER
CHECKED BY: J. SALVATORI
SHEET 79 OF 166

STATE OF VERMONT
AGENCY OF TRANSPORTATION
MATERIALS & RESEARCH SECTION
SUBSURFACE INFORMATION

# BORING LOG

**HARTFORD**
**IM 91-2(79)**
**I-91 BR-43**

Boring No.: **B-210**
Page No.: 1 of 1
Pin No.: 12A132
Checked By: BLS

Boring Crew: DAIGNEAULT, NIETO, JUDKINS
Date Started: 5/08/14 Date Finished: 5/12/14
VTSPG NAD83: N 417672.63 ft E 1683317.78 ft
Station: 152+00.73 Offset: 41.39
Ground Elevation: 572.42 ft

| | Casing | Sampler |
|---|---|---|
| Type: | WB | SS |
| I.D.: | 4 in | 1.5 in |
| Hammer Wt: | N.A. | 140 lb. |
| Hammer Fall: | N.A. | 30 in. |
| Hammer/Rod Type: | Auto/AWJ | |
| Rig: | CME 55 TRACK | $C_e$ = 1.46 |

Groundwater Observations

| Date | Depth (ft) | Notes |
|---|---|---|
| 05/09/14 | 19.7 | AM |
| 05/12/14 | 19.3 | While drilling. |

| Depth (ft) | Strata (1) | CLASSIFICATION OF MATERIALS (Description) | Run (Dip deg.) | Core Rec. % (ROD %) | Drill Rate minutes/ft | Blows/6" (N Value) | Moisture Content % | Gravel % | Sand % | Fines % |
|---|---|---|---|---|---|---|---|---|---|---|
| | | A-1-b, SaGr, brn, Moist, Rec. = 1.1 ft, Lab Note: Wood & Roots were within sample. | | | | 3-2-4-4 (6) | 5.3 | 47.9 | 44.4 | 7.7 |
| | | Field Note:, NXDC, Cobbles | | | | | | | | |
| 5 | | Field Note:, No Recovery | | | | R@0.0" (R) | | | | |
| | | Field Note:, NXDC, Boulder | | | | | | | | |
| 10 | | A-2-4, GrSiSa, gry, Moist, Rec. = 0.9 ft | | | | 5-4-3-4 (7) | 14.5 | 22.3 | 44.5 | 33.2 |
| | | Field Note:, NXDC | | | | | | | | |
| 15 | | A-2-4, SiSa, gry, Moist, Rec. = 1.2 ft | | | | 10-13-11-15 (24) | 12.7 | 17.8 | 48.1 | 34.1 |
| | | Field Note:, Roller Coned ahead and cleaned out casing. | | | | | | | | |
| 20 | | A-2-4, GrSiSa, gry, Moist, Rec. = 1.1 ft | | | | 10-9-10-10 (19) | 12.1 | 21.8 | 51.5 | 26.7 |
| | | Field Note:, Roller Coned ahead and cleaned out casing. | | | | | | | | |
| 25 | | A-4, SaGrSi, gry, Moist, Rec. = 0.5 ft, Lab Note: Broken Rock was within sample. | | | | R@6.0" (R) | 10.3 | 32.0 | 29.4 | 38.6 |
| | | Field Note:, Roller Coned ahead and cleaned out casing. | | | | | | | | |
| 30 | | Field Note:, No Recovery<br>Field Note:, Mostly Broken Rock with a small layer of Weathered Rock | | | | R@0.0" (R) | | | | |
| | | 32.6 ft - 36.6 ft, Dark-greenish-gray to medium-bluish-gray metamorphosed andesitic and basaltic Tuff, Moderately hard to soft, Unweathered, Poor rock, NXMDC, RMR = 41 | 1 (75) | 100 (28) | 2<br>3<br>7<br>13 | Top of Bedrock @ 32.6 ft | | | | |
| 35 | | 36.6 ft - 41.6 ft, Dark-greenish-gray to medium-bluish-gray metamorphosed andesitic and basaltic Tuff, Moderately hard to soft, Unweathered, Poor rock, NXMDC, RMR = 36 | 2 (75) | 42 (0) | 3<br>26<br>16<br>9<br>3 | | | | | |
| 40 | | Hole stopped @ 41.6 ft | | | | | | | | |
| 45 | | Remarks:<br>Hole collapsed at 7.7 ft. | | | | | | | | |

Notes:
1. Stratification lines represent approximate boundary between material types. Transition may be gradual.
2. N Values have not been corrected for hammer energy. $C_e$ is the hammer energy correction factor.
3. Water level readings have been made at times and under conditions stated. Fluctuations may occur due to other factors than those present at the time measurements were made.

BORING LOG 2 HARTFORD IM 91-2(79).GPJ VERMONT AOT.GDT 5/30/14

STATE OF VERMONT
AGENCY OF TRANSPORTATION
MATERIALS & RESEARCH SECTION
SUBSURFACE INFORMATION

# BORING LOG

**HARTFORD**
**IM 91-2(79)**
**I-91 BR-43**

Boring No.: **B-211**
Page No.: 1 of 1
Pin No.: 12A132
Checked By: BLS

Boring Crew: DAIGNEAULT, NIETO, HOOK
Date Started: 5/05/14 Date Finished: 5/05/14
VTSPG NAD83: N 417452.80 ft E 1683180.69 ft
Station: 149+58.45 Offset: -49.66
Ground Elevation: 567.04 ft

| | Casing | Sampler |
|---|---|---|
| Type: | WB | SS |
| I.D.: | 4 in | 1.5 in |
| Hammer Wt: | N.A. | 140 lb. |
| Hammer Fall: | N.A. | 30 in. |
| Hammer/Rod Type: | Auto/AWJ | |
| Rig: | CME 55 TRACK | $C_e$ = 1.46 |

Groundwater Observations

| Date | Depth (ft) | Notes |
|---|---|---|
| 05/05/14 | 8.1 | While drilling. |

| Depth (ft) | Strata (1) | CLASSIFICATION OF MATERIALS (Description) | Run (Dip deg.) | Core Rec. % (ROD %) | Drill Rate minutes/ft | Blows/6" (N Value) | Moisture Content % | Gravel % | Sand % | Fines % |
|---|---|---|---|---|---|---|---|---|---|---|
| | | A-2-4, SiSa, brn, Moist, Rec. = 0.7 ft, Lab Note: Grass & Roots were within sample. | | | | 1-1-1-1 (2) | 18.0 | 15.5 | 53.9 | 30.6 |
| 5 | | A-2-4, SiSa, brn, Moist, Rec. = 1.0 ft, Lab Note: Roots were within sample. Roller Coned, Cleaned out casing. | | | | 1-1-6-10 (7) | 20.1 | 7.8 | 70.4 | 21.8 |
| 10 | | A-2-4, SiSa, brn, Moist, Rec. = 1.1 ft, Lab Note: Broken Rock was within sample. | | | | 10-9-9-14 (18) | 14.5 | 15.4 | 58.8 | 25.8 |
| | | Field Note:, Roller Coned ahead and cleaned out casing. | | | | | | | | |
| 15 | | A-4, SiSa, brn, Moist, Rec. = 0.7 ft, Lab Note: Broken Rock was within sample. | | | | 5-12-R@6.0" (R) | 13.8 | 18.1 | 41.1 | 40.8 |
| | | SaGr, blu-grn, Dry, Rec. = 0.2 ft, 16.3 ft - 16.5 ft, Lab Note: Mostly Broken Rock with sandy silt. | | | | | 3.8 | 52.2 | 32.2 | 15.6 |
| | | Field Note:, Roller Coned ahead and cleaned out casing. | | | | | | | | |
| 20 | | A-4, GrSaSi, gry, MTW, Rec. = 0.9 ft, Lab Note: Broken Rock was within sample. | | | | 25-42-R@3.5" (R) | 11.3 | 25.3 | 26.8 | 47.9 |
| | | Field Note:, Roller Coned ahead and cleaned out casing. | | | | | | | | |
| 25 | | A-4, GrSaSi, gry, MTW, Rec. = 1.2 ft, Lab Note: Broken Rock was within sample. | | | | 17-36-31-R@3.5" (67) | 12.9 | 20.5 | 35.2 | 44.3 |
| | | Field Note:, Roller Coned ahead and cleaned out casing. | | | | | | | | |
| 30 | | A-4, SaSi, gry, Moist, Rec. = 1.3 ft, Lab Note: Broken Rock was within sample. | | | | 26-44-R@3.5" (R) | 11.5 | 18.3 | 32.5 | 49.2 |
| | | Field Note:, Roller Coned ahead and cleaned out casing. | | | | | | | | |
| 35 | | A-4, SaSi, gry, Moist, Rec. = 0.8 ft, Lab Note: Broken Rock was within sample. | | | | 30-R@6.0" (R) | 12.4 | 16.1 | 36.9 | 47.0 |
| | | Field Note:, Roller Coned, Weathered Rock | | | | | | | | |
| 40 | | 40.0 ft - 45.0 ft, Dark-greenish-gray to medium-bluish-gray metamorphosed andesitic and basaltic Tuff, Moderately hard, Unweathered, Poor rock, NXMDC, Vertical fractures in upper core run. RMR = 36 | 1 (85) | 90 (7) | 6<br>7<br>7<br>13<br>15 | Top of Bedrock @ 40.0 ft | | | | |
| 45 | | Hole stopped @ 45.0 ft | | | | | | | | |
| | | Remarks:<br>Hole collapsed at 38.2 ft. | | | | | | | | |

Notes:
1. Stratification lines represent approximate boundary between material types. Transition may be gradual.
2. N Values have not been corrected for hammer energy. $C_e$ is the hammer energy correction factor.
3. Water level readings have been made at times and under conditions stated. Fluctuations may occur due to other factors than those present at the time measurements were made.

BORING LOG 2 HARTFORD IM 91-2(79).GPJ VERMONT AOT.GDT 5/30/14

PROJECT NAME: HARTFORD
PROJECT NUMBER: IM 091-2(79)

FILE NAME: sl2al32bor_new.dgn
PROJECT LEADER: K. HIGGINS
DESIGNED BY: W. LAMMER
BORING LOGS 8

PLOT DATE: 15-DEC-2014
DRAWN BY: W. LAMMER
CHECKED BY: J. SALVATORI
SHEET 80 OF 166

STATE OF VERMONT
AGENCY OF TRANSPORTATION
MATERIALS & RESEARCH SECTION
SUBSURFACE INFORMATION

# BORING LOG

**HARTFORD**
**IM 91-2(79)**
**I-91 BR-43**

Boring No.: **B-212**
Page No.: 1 of 1
Pin No.: 12A132
Checked By: BLS

Boring Crew: DAIGNEAULT, NIETO, HOOK
Date Started: 4/30/14 Date Finished: 5/02/14
VTSPG NAD83: N 417630.22 ft E 1683206.05 ft
Station: 151+33.92 Offset: -57.55
Ground Elevation: 564.13 ft

| | Casing | Sampler |
|---|---|---|
| Type: | WB | SS |
| I.D.: | 4 in | 1.5 in |
| Hammer Wt: | N.A. | 140 lb. |
| Hammer Fall: | N.A. | 30 in. |
| Hammer/Rod Type: | Auto/AWJ | |
| Rig: | CME 55 TRACK | $C_e$ = 1.46 |

| Groundwater Observations | | |
|---|---|---|
| Date | Depth (ft) | Notes |
| 05/02/14 | 12.7 | AM |
| 05/02/14 | 1.6 | Casing removed. |

| Depth (ft) | Strata (1) | CLASSIFICATION OF MATERIALS (Description) | Run (Dip deg.) | Core Rec. % (ROD %) | Drill Rate minutes/ft | Blows/6" (N Value) | Moisture Content % | Gravel % | Sand % | Fines % |
|---|---|---|---|---|---|---|---|---|---|---|
| | | A-4, SiSa, brn, Moist, Rec. = 1.1 ft, Lab Note: Grass & Roots were within sample. | | | | 1-2-3-4 (5) | 16.1 | 12.1 | 49.3 | 38.6 |
| | | A-4, SiSa, brn, Moist, Rec. = 1.4 ft | | | | | 10.8 | 13.9 | 48.6 | 37.5 |
| 5 | | A-4, SiSa, brn, Moist, Rec. = 1.3 ft | | | | 8-10-16-19 (26) | 9.8 | 15.6 | 43.1 | 41.3 |
| | | A-2-4, SiSa, brn, Moist, Rec. = 1.7 ft | | | | 15-20-15-17 (35) | 8.6 | 16.3 | 53.7 | 30.0 |
| | | A-2-4, SiGrSa, gry, Moist, Rec. = 1.2 ft, NXDC, Cleaned out casing. | | | | 11-14-45-17 (59) | 11.0 | 26.0 | 49.2 | 24.8 |
| 10 | | A-2-4, SiGrSa, gry, Moist, Rec. = 1.2 ft, NXDC, Cleaned out casing. Lab Note: Broken Rock was within sample. | | | | 13-11-13-14 (24) | 11.5 | 24.0 | 55.7 | 20.3 |
| | | A-2-4, SiGrSa, gry, Moist, Rec. = 0.8 ft, Lab Note: Broken Rock was within sample. | | | | 23-16-11-16 (27) | 11.7 | 32.2 | 47.2 | 20.6 |
| 15 | | A-1-b, SaGr, gry, Moist, Rec. = 1.1 ft, NXDC, Cleaned out casing. Lab Note: Broken Rock was within sample. | | | | 20-16-15-16 (31) | 10.9 | 43.0 | 39.5 | 17.5 |
| | | A-2-4, GrSa, gry, Moist, Rec. = 1.2 ft, Lab Note: Broken Rock was within sample. | | | | 13-13-14-15 (27) | 11.8 | 29.0 | 53.1 | 17.9 |
| | | A-1-b, SaGr, gry, Moist, Rec. = 1.1 ft, Lab Note: Broken Rock was within sample. | | | | 22-26-28-22 (54) | 10.6 | 51.4 | 32.0 | 16.6 |
| 20 | | A-4, SiSa, gry, Moist, Rec. = 1.5 ft, Lab Note: Broken Rock was within sample. | | | | 12-12-16-13 (28) | 15.6 | 17.0 | 45.9 | 37.1 |
| | | A-2-4, SaGrSi, gry, Moist, Rec. = 1.0 ft, Lab Note: Broken Rock was within sample. | | | | 18-39-33-R@1.0" (72) | 10.3 | 33.9 | 31.0 | 35.1 |
| | | A-4, SaSi, gry, Moist, Rec. = 0.3 ft | | | | R@3.5" (R) | 11.7 | 8.7 | 44.0 | 47.3 |
| 25 | | Field Note:, Cobbles | | | | | | | | |
| | | Field Note:, Weathered Rock | | | | Top of Bedrock @ 27.4 ft | | | | |
| | | 27.4 ft - 32.4 ft, Dark-greenish-gray to medium-bluish-gray metamorphosed andesitic and basaltic Tuff, Moderately hard, Unweathered, Poor rock, NXMDC, Near vertical fracture from 29.4' to 32.4'. RMR = 36 | 1 (85) | 86 (10) | 2<br>3<br>4<br>3<br>4 | | | | | |
| 30 | | Hole stopped @ 32.4 ft | | | | | | | | |
| 35 | | Remarks:<br>Hole collapsed at 16.3 ft. | | | | | | | | |

Notes:
1. Stratification lines represent approximate boundary between material types. Transition may be gradual.
2. N Values have not been corrected for hammer energy. $C_e$ is the hammer energy correction factor.
3. Water level readings have been made at times and under conditions stated. Fluctuations may occur due to other factors than those present at the time measurements were made.

BORING LOG 2 HARTFORD IM 91-2(79).GPJ VERMONT AOT.GDT 5/30/14

STATE OF VERMONT
AGENCY OF TRANSPORTATION
MATERIALS & RESEARCH SECTION
SUBSURFACE INFORMATION

# BORING LOG

**HARTFORD**
**IM 91-2(79)**
**I-91 BR-43**

Boring No.: **B-214**
Page No.: 1 of 1
Pin No.: 12A132
Checked By: BLS

Boring Crew: JUDKINS, HOOK
Date Started: 5/12/14 Date Finished: 5/13/14
VTSPG NAD83: N 417666.95 ft E 1683415.96 ft
Station: 251+81.01 Offset: 60.34
Ground Elevation: 560.87 ft

| | Casing | Sampler |
|---|---|---|
| Type: | WB | SS |
| I.D.: | 4 in | 1.5 in |
| Hammer Wt: | N.A. | 140 lb. |
| Hammer Fall: | N.A. | 30 in. |
| Hammer/Rod Type: | Auto/AWJ | |
| Rig: | CME 55 TRACK | $C_e$ = 1.46 |

| Groundwater Observations | | |
|---|---|---|
| Date | Depth (ft) | Notes |
| | | No water to depth. |

| Depth (ft) | Strata (1) | CLASSIFICATION OF MATERIALS (Description) | Run (Dip deg.) | Core Rec. % (ROD %) | Drill Rate minutes/ft | Blows/6" (N Value) | Moisture Content % | Gravel % | Sand % | Fines % |
|---|---|---|---|---|---|---|---|---|---|---|
| | | A-2-4, SiGrSa, brn, Moist, Rec. = 0.7 ft, Lab Note: Wood, roots, grass were within sample. | | | | 1-4-10-9 (14) | 24.2 | 24.8 | 53.9 | 21.3 |
| | | Field Note:, Cobbles & Boulders | | | | | | | | |
| 5 | | Field Note:, No Recovery | | | | R@1.0" (R) | | | | |
| | | Field Note:, Lost water return at 6.0 feet | | | | | | | | |
| | | Field Note:, NXDC, Cleaned out casing | | | | | | | | |
| 10 | | Lab Note, Mostly Broken Rock with sandy silt, grn, Moist, Rec. = 0.5 ft | | | | 26-24-17-13 (41) | 7.5 | 65.7 | 20.7 | 13.6 |
| | | Field Note:, NXDC, Cobbles | | | | | | | | |
| 15 | | 15.0 ft - 16.0 ft, Dark-greenish-gray to medium-bluish-gray metamorphosed andesitic and basaltic Tuff, with plagioclase phenocrysts. Moderately hard, Unweathered, Poor rock, NXDC, RMR = 39 | 1 (?)<br>2 (?) | 70 (0)<br>98 (58) | 3<br>5<br>4<br>4<br>5<br>5 | Top of Bedrock @ 15.0 ft | | | | |
| 20 | | 16.0 ft - 21.0 ft, Dark-greenish-gray to medium-bluish-gray metamorphosed andesitic and basaltic Tuff, with plagioclase phenocrysts. Moderately hard, Unweathered, Fair rock, NXMDC, RMR = 49 | | | | | | | | |
| | | Hole stopped @ 21.0 ft | | | | | | | | |
| 25 | | Remarks:<br>Hole collapsed at 10.3 ft. | | | | | | | | |
| 30 | | | | | | | | | | |
| 35 | | | | | | | | | | |
| 40 | | | | | | | | | | |
| 45 | | | | | | | | | | |

Notes:
1. Stratification lines represent approximate boundary between material types. Transition may be gradual.
2. N Values have not been corrected for hammer energy. $C_e$ is the hammer energy correction factor.
3. Water level readings have been made at times and under conditions stated. Fluctuations may occur due to other factors than those present at the time measurements were made.

BORING LOG 2 HARTFORD IM 91-2(79).GPJ VERMONT AOT.GDT 5/30/14

PROJECT NAME: HARTFORD
PROJECT NUMBER: IM 091-2(79)

FILE NAME: sl2al32bor_new.dgn
PROJECT LEADER: K. HIGGINS
DESIGNED BY: W. LAMMER
BORING LOGS 9

PLOT DATE: 15-DEC-2014
DRAWN BY: W. LAMMER
CHECKED BY: J. SALVATORI
SHEET 81 OF 166

STATE OF VERMONT
AGENCY OF TRANSPORTATION
MATERIALS & RESEARCH SECTION
SUBSURFACE INFORMATION

# BORING LOG

Hartford, VT

I91 Bridge 43 N/S

Boring No.: B-215
Page No.: 1 of 1
Pin No.: s12a132
Checked By: ASP

Boring Crew: Drilex/Jason, MJR
Date Started: 4/03/14 Date Finished: 4/03/14
VTSPG NAD83: N 417493.25 ft E 1683150.25 ft
Station: 149+92.68 Offset: -86.12
Ground Elevation: 552.71 ft

| | Casing | Sampler |
|---|---|---|
| Type: | Auger/WB | SS |
| I.D.: | 4.5 in | 2 in |
| Hammer Wt: | 300 lb. | 140 lb. |
| Hammer Fall: | N.A. | 30 in. |
| Hammer/Rod Type: | | Auto |
| Rig: | CME 50 | CE = 1.33 |

Groundwater Observations

| Date | Depth (ft) | Notes |
|---|---|---|
| 04/03/14 | 0.0 | Due to water used |
| | | during drilling |
| | | |

| Depth (ft) | Strata (1) | CLASSIFICATION OF MATERIALS (Description) | Run (Dip deg.) | Core Rec. % (RQD %) | Drill Rate minutes/ft | Blows/6" (N Value) | Moisture Content % | Gravel % | Sand % | Fines % |
|---|---|---|---|---|---|---|---|---|---|---|
| | | A-1-b, SaGrSi, Rec. = 1.0 ft, (FILL) | | | | 4-3-2-2 (5) | 20.4 | 31.6 | 46.0 | 22.4 |
| 2.5 | | A-2-4, SaSiGr, (FILL) | | | | 5-7-10-10 (17) | 13.5 | 22.8 | 45.6 | 31.6 |
| | | A-4, SiSaGr, Rec. = 1.17 ft | | | | 12-27-39-25/1" (66) | 11.2 | 20.2 | 33.9 | 45.9 |
| 5.0 | | | | | | | | | | |
| 7.5 | | A-4, SiSaGr, Rec. = 15.0 ft | | | | 19-27-42-30/2" (69) | 11.4 | 12.5 | 37.4 | 50.1 |
| 10.0 | | Weathered bedrock | | | | | | | | |
| 12.5 | | 12.0 ft – 17.0 ft, Grey-green ANDESITE, hard, 5° to 70° and 45° joint sets, smooth, fresh. Bottom 8" 45° fractures, mod. weathered, open-clay-silt filled at very bottom of last 45° joint. Foliation nearly vertical, mod. close, tight. | 1 | 100 (85) | 1.3<br>2.3<br>2.5<br>3<br>1.6 | | | | | |
| 15.0 | | | | | | | | | | |
| | | Hole stopped @ 17.0 ft | | | | | | | | |
| 17.5 | | | | | | | | | | |
| 20.0 | | | | | | | | | | |
| 22.5 | | | | | | | | | | |

Notes:
1. Stratification lines represent approximate boundary between material types. Transition may be gradual.
2. N Values have not been corrected for hammer energy. CE is the hammer energy correction factor. CE is an estimated value.
3. Water level readings have been made at times and under conditions stated. Fluctuations of groundwater may occur due to other factors than those present at the time measurements were made.
4. Ground surface elevations indicated on the boring logs were estimated based on the grading plan provided by VAOT.

Terracon

2010 COPY J114S115.GPJ VERMONT AOT.GDT 5/30/14

STATE OF VERMONT
AGENCY OF TRANSPORTATION
MATERIALS & RESEARCH SECTION
SUBSURFACE INFORMATION

# BORING LOG

Hartford, VT

I91 Bridge 43 N/S

Boring No.: B-216
Page No.: 1 of 1
Pin No.: s12a132
Checked By: ASP

Boring Crew: Drilex/Jason, MJR
Date Started: 4/03/14 Date Finished: 4/03/14
VTSPG NAD83: N 417592.86 ft E 1683174.45 ft
Station: 150+91.87 Offset: 80.60
Ground Elevation: 549.35 ft

| | Casing | Sampler |
|---|---|---|
| Type: | Auger/WB | SS |
| I.D.: | 4.5 in | 2 in |
| Hammer Wt: | 300 lb. | 140 lb. |
| Hammer Fall: | N.A. | 30 in. |
| Hammer/Rod Type: | | Auto |
| Rig: | CME 50 | CE = 1.33 |

Groundwater Observations

| Date | Depth (ft) | Notes |
|---|---|---|
| 04/03/14 | 0.0 | Due to water used |
| | | during drilling |
| | | |

| Depth (ft) | Strata (1) | CLASSIFICATION OF MATERIALS (Description) | Run (Dip deg.) | Core Rec. % (RQD %) | Drill Rate minutes/ft | Blows/6" (N Value) | Moisture Content % | Gravel % | Sand % | Fines % |
|---|---|---|---|---|---|---|---|---|---|---|
| 2.5 | | | | | | | | | | |
| 5.0 | | A-4, SaSiGr, Rec. = 0.83 ft | | | | 9-11-14-14 (25) | 12.3 | 25.0 | 39.1 | 35.9 |
| 7.5 | | Weathered bedrock | | | | | | | | |
| 10.0 | | 11.0 ft – 16.0 ft, Gray-green ANDESITE, hard, 0° and 80° joint sets, slightly weathered, smooth, moderately close, slighty open joints in 9" piece near bottom, smooth; thin foliation. | 1 | 90 (85) | 2.5<br>2.3<br>2.5<br>2.3<br>2.8 | | | | | |
| 12.5 | | | | | | | | | | |
| 15.0 | | | | | | | | | | |
| | | Hole stopped @ 16.0 ft | | | | | | | | |
| 17.5 | | | | | | | | | | |
| 20.0 | | | | | | | | | | |
| 22.5 | | | | | | | | | | |

Notes:
1. Stratification lines represent approximate boundary between material types. Transition may be gradual.
2. N Values have not been corrected for hammer energy. CE is the hammer energy correction factor. CE is an estimated value.
3. Water level readings have been made at times and under conditions stated. Fluctuations of groundwater may occur due to other factors than those present at the time measurements were made.
4. Ground surface elevations indicated on the boring logs were estimated based on the grading plan provided by VAOT.

Terracon

2010 COPY J114S115.GPJ VERMONT AOT.GDT 5/30/14

PROJECT NAME: HARTFORD
PROJECT NUMBER: IM 091-2(79)

FILE NAME: s12a132bor_new.dgn
PROJECT LEADER: K. HIGGINS
DESIGNED BY: W. LAMMER
BORING LOGS 10

PLOT DATE: 15-DEC-2014
DRAWN BY: W. LAMMER
CHECKED BY: J. SALVATORI
SHEET 82 OF 166

STATE OF VERMONT
AGENCY OF TRANSPORTATION
MATERIALS & RESEARCH SECTION
SUBSURFACE INFORMATION

# BORING LOG

Hartford, VT

I91 Bridge 43 N/S

Boring No.: B-217
Page No.: 1 of 2
Pin No.: s12a132
Checked By: ASP

Boring Crew: NTB/Mike Nadeau, MJR
Date Started: 3/25/14 Date Finished: 3/25/14
VTSPG NAD83: N 417515.93 ft E 1683416.13 ft
Station: 250+29.29 Offset: 94.25
Ground Elevation: 555.78 ft

| | Casing | Sampler |
|---|---|---|
| Type: | Auger/WB | SS |
| I.D.: | 4.5 in | 2 in |
| Hammer Wt: | 300 lb. | 140 lb. |
| Hammer Fall: | N.A. | 30 in. |
| Hammer/Rod Type: | | Auto |
| Rig: | CME 50 | CE = 1.33 |

Groundwater Observations

| Date | Depth (ft) | Notes |
|---|---|---|
| 03/25/14 | 10.2 | After drilling |

| Depth (ft) | Strata (1) | CLASSIFICATION OF MATERIALS (Description) | Run (Dip deg.) | Core Rec. % (RQD %) | Blows/6" (N Value) | Moisture Content % | Gravel % | Sand % | Fines % |
|---|---|---|---|---|---|---|---|---|---|
| 2.5 | | A-2-4, SaSiGr, Rec. = 1.17 ft, (FILL) | | | 3-7-7-7 (14) | 16.8 | 23.4 | 47.4 | 29.2 |
| 5.0 | | A-2-4, SaSiGr, Rec. = 1.83 ft, (FILL) | | | 9-17-17-12 (34) | 14.6 | 17.8 | 51.3 | 30.9 |
| 7.5 | | A-1-b, GrSaSi, (FILL) | | | | 7.4 | 48.0 | 29.5 | 22.5 |
| 10.0 | | A-2-4, SaSiGr, Rec. = 1.92 ft | | | 15-14-16-8 (30) | 10.8 | 26.8 | 41.6 | 31.6 |
| 12.5 | | | | | | | | | |
| 15.0 | | A-2-4, GrSaSi, Rec. = 1.08 ft | | | 9-15-18-19 (33) | 10.7 | 37.0 | 34.5 | 28.5 |
| 17.5 | | | | | | | | | |
| 20.0 | | | | | | | | | |
| 22.5 | | | | | | | | | |

Notes:
1. Stratification lines represent approximate boundary between material types. Transition may be gradual.
2. N Values have not been corrected for hammer energy. CE is the hammer energy correction factor. CE is an estimated value.
3. Water level readings have been made at times and under conditions stated.
Fluctuations of groundwater may occur due to other factors than those present at the time measurements were made.
4. Ground surface elevations indicated on the boring logs were estimated based on the grading plan provided by VAOT.

Terracon

2010 COPY J1145115.GPJ VERMONT AOT.GDT 5/30/14

STATE OF VERMONT
AGENCY OF TRANSPORTATION
MATERIALS & RESEARCH SECTION
SUBSURFACE INFORMATION

# BORING LOG

Hartford, VT

I91 Bridge 43 N/S

Boring No.: B-217
Page No.: 2 of 2
Pin No.: s12a132
Checked By: ASP

Boring Crew: NTB/Mike Nadeau, MJR
Date Started: 3/25/14 Date Finished: 3/25/14
VTSPG NAD83: N 417515.93 ft E 1683416.13 ft
Station: 250+29.29 Offset: 94.25
Ground Elevation: 555.78 ft

| | Casing | Sampler |
|---|---|---|
| Type: | Auger/WB | SS |
| I.D.: | 4.5 in | 2 in |
| Hammer Wt: | 300 lb. | 140 lb. |
| Hammer Fall: | N.A. | 30 in. |
| Hammer/Rod Type: | | Auto |
| Rig: | CME 50 | CE = 1.33 |

Groundwater Observations

| Date | Depth (ft) | Notes |
|---|---|---|
| 03/25/14 | 10.2 | After drilling |

| Depth (ft) | Strata (1) | CLASSIFICATION OF MATERIALS (Description) | Run (Dip deg.) | Core Rec. % (RQD %) | Blows/6" (N Value) | Moisture Content % | Gravel % | Sand % | Fines % |
|---|---|---|---|---|---|---|---|---|---|
| | | Rec. = 0.17 ft, 25.0 ft – 27.0 ft | | | 9-11-12-14 (23) | | | | |
| 27.5 | | Weathered bedrock | | | | | | | |
| 30.0 | | 30.0 ft – 33.0 ft, Gray-green ANDESITE, hard, 70° and 45° joint sets, closely spaced, slight to severe weathering, with quartz boudins. | 1 | 58 (12.5) | | | | | |
| 32.5 | | 33.0 ft – 34.5 ft, Green-gray ANDESITE, hard, 45° to 0°, 90° joint sets, closely spaced, rough to smooth, moderately weathered. | 2 | 66 (44) | | | | | |
| 35.0 | | 34.5 ft – 36.0 ft, Similar as above, vertical fracture in last 8" piece, very slight weathering. | 3 | 100 (69) | | | | | |
| | | Hole stopped @ 36.0 ft | | | | | | | |
| 37.5 | | | | | | | | | |
| 40.0 | | | | | | | | | |
| 42.5 | | | | | | | | | |
| 45.0 | | | | | | | | | |
| 47.5 | | | | | | | | | |

Notes:
1. Stratification lines represent approximate boundary between material types. Transition may be gradual.
2. N Values have not been corrected for hammer energy. CE is the hammer energy correction factor. CE is an estimated value.
3. Water level readings have been made at times and under conditions stated.
Fluctuations of groundwater may occur due to other factors than those present at the time measurements were made.
4. Ground surface elevations indicated on the boring logs were estimated based on the grading plan provided by VAOT.

Terracon

2010 COPY J1145115.GPJ VERMONT AOT.GDT 5/30/14

PROJECT NAME: HARTFORD
PROJECT NUMBER: IM 091-2(79)

FILE NAME: s12a132bor_new.dgn
PROJECT LEADER: K. HIGGINS
DESIGNED BY: W. LAMMER
BORING LOGS II

PLOT DATE: 15-DEC-2014
DRAWN BY: W. LAMMER
CHECKED BY: J. SALVATORI
SHEET 83 OF 166

STATE OF VERMONT
AGENCY OF TRANSPORTATION
MATERIALS & RESEARCH SECTION
SUBSURFACE INFORMATION

# BORING LOG

Hartford, VT

I91 Bridge 43 N/S

Boring No.: B-218
Page No.: 1 of 1
Pin No.: s12a132
Checked By: ASP

Boring Crew: Drilex/Jason, MJR
Date Started: 4/03/14 Date Finished: 4/03/14
VTSPG NAD83: N 417651.73 ft E 1683448.99 ft
Station: 251+74.37 Offset: 96.21
Ground Elevation: 547.65 ft

| | Casing | Sampler |
|---|---|---|
| Type: | Auger/WB | SS |
| I.D.: | 4.5 in | 2 in |
| Hammer Wt: | 300 lb. | 140 lb. |
| Hammer Fall: | N.A. | 30 in. |
| Hammer/Rod Type: | | Auto |
| Rig: | CME 50 | CE = 1.33 |

Groundwater Observations

| Date | Depth (ft) | Notes |
|---|---|---|
| 04/02/14 | 0.0 | Due to water used |
| | | during drilling |
| | | |

| Depth (ft) | Strata (1) | CLASSIFICATION OF MATERIALS (Description) | Run (Dip deg.) | Core Rec. % (RQD %) | Drill Rate minutes/ft | Blows/6" (N Value) | Moisture Content % | Gravel % | Sand % | Fines % |
|---|---|---|---|---|---|---|---|---|---|---|
| | | Spin 4" casing to 12", start coring at 12" | | | | | | | | |
| 2.5 | | 1.0 ft – 5.0 ft, Gray-green ANDESITE, hard, 75° and 10° joint sets, fresh weathering, moderately close. Minor 75° foliation with quartz filling, thin, rough, slightly open to tight. | 1 | 92 (92) | 2.3<br>2.2<br>2<br>2.75 | | | | | |
| 5.0 | | 5.0 ft – 6.0 ft, Similar as above. | 2 | 100 (50) | 2 | | | | | |
| | | Hole stopped @ 6.0 ft | | | | | | | | |
| 7.5 | | | | | | | | | | |
| 10.0 | | | | | | | | | | |
| 12.5 | | | | | | | | | | |
| 15.0 | | | | | | | | | | |
| 17.5 | | | | | | | | | | |
| 20.0 | | | | | | | | | | |
| 22.5 | | | | | | | | | | |

Notes:
1. Stratification lines represent approximate boundary between material types. Transition may be gradual.
2. N Values have not been corrected for hammer energy. CE is the hammer energy correction factor. CE is an estimated value.
3. Water level readings have been made at times and under conditions stated. Fluctuations of groundwater may occur due to other factors than those present at the time measurements were made.
4. Ground surface elevations indicated on the boring logs were estimated based on the grading plan provided by VAOT.

Terracon

2010 COPY J114S115.GPJ VERMONT AOT.GDT 5/30/14

PROJECT NAME: HARTFORD
PROJECT NUMBER: IM 091-2(79)

FILE NAME: s12a132bor_new.dgn
PROJECT LEADER: K. HIGGINS
DESIGNED BY: W. LAMMER
BORING LOGS 8

PLOT DATE: 15-DEC-2014
DRAWN BY: W. LAMMER
CHECKED BY: J. SALVATORI
SHEET 84 OF 166

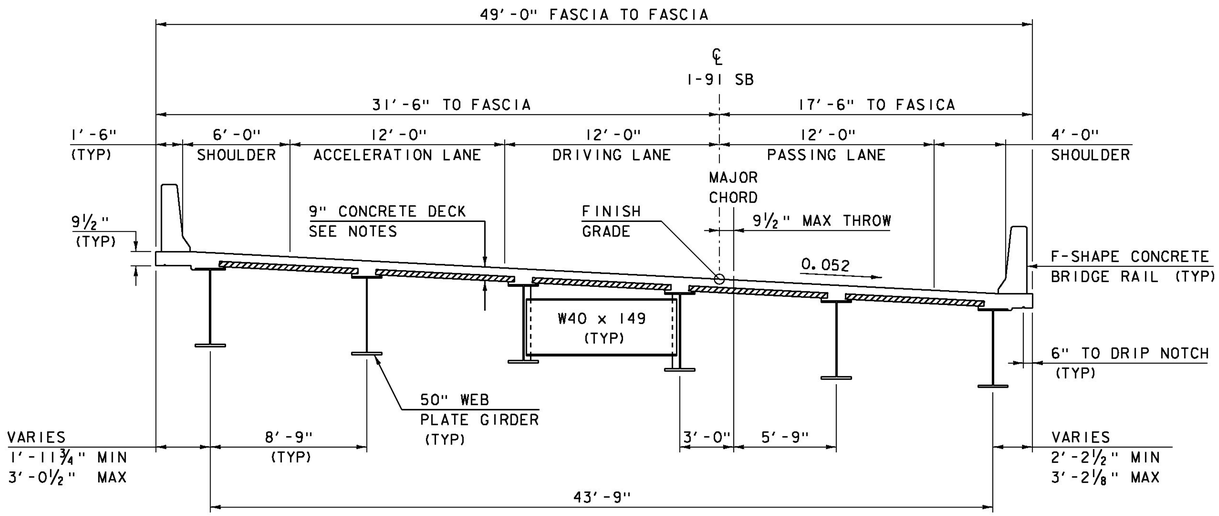


## BRIDGE 43S TYPICAL SECTION

SCALE: ¼" = 1'-0"

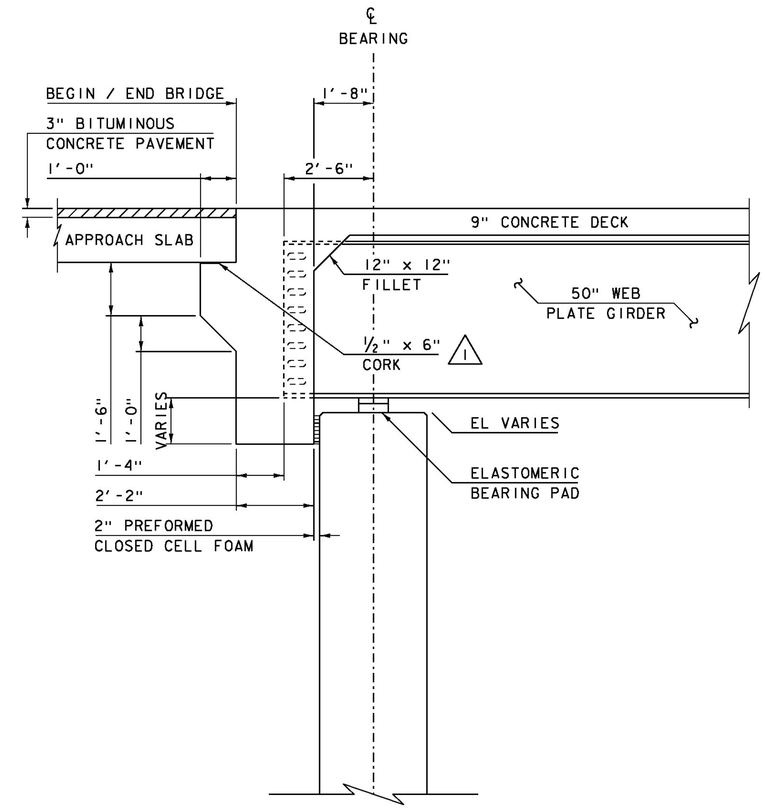


## BRIDGE 43S END DETAIL

SCALE ½" = 1'-0"

| REVISION | DATE | DESCRIPTION | BY |
|---|---|---|---|
| 1 | 01-06-2015 | CORK DIMENSION | RK |

PROJECT NAME: HARTFORD
PROJECT NUMBER: IM 091-2(79)

FILE NAME: sl2al32bridge_end_detail.dgn
PROJECT LEADER: K. HIGGINS
DESIGNED BY: R. KLINEFELTER
SUPERSTRUCTURE TYPICALS 43S

PLOT DATE: 06-JAN-2015
DRAWN BY: K. FRIEDLAND
CHECKED BY: J. SALVATORI
SHEET 85 OF 166

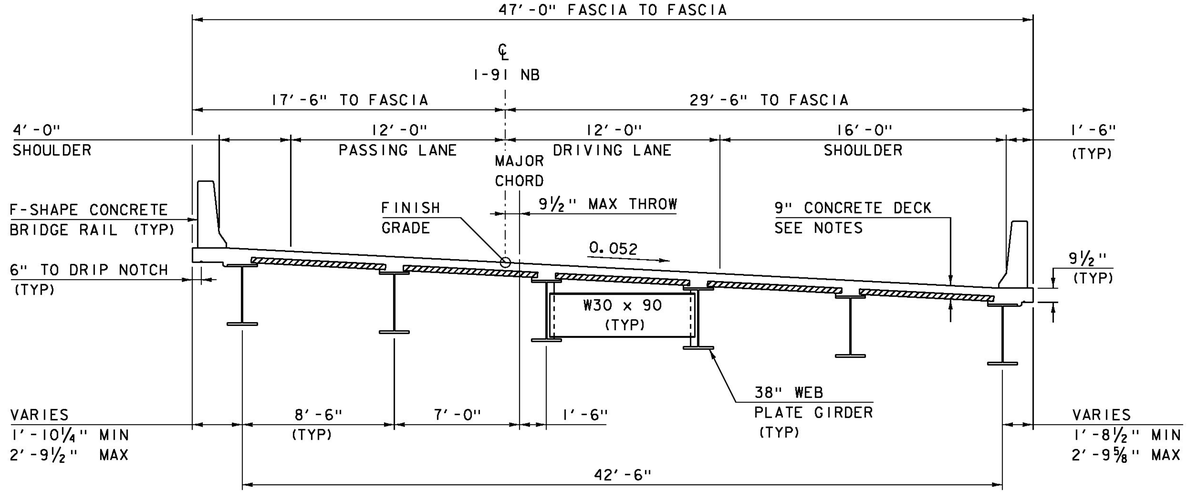


## BRIDGE 43N TYPICAL SECTION

SCALE: ¼" = 1'-0"

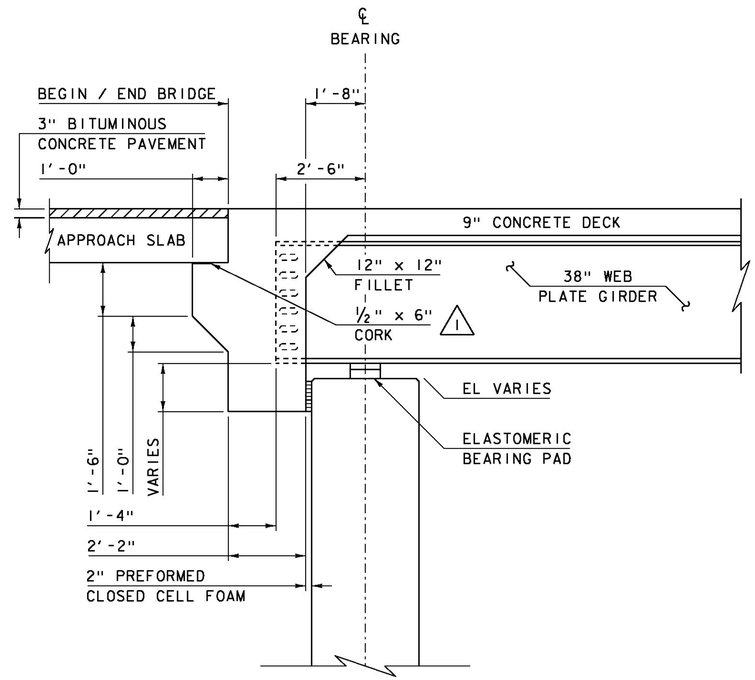


## BRIDGE 43N END DETAIL

SCALE ½"=1'-0"

| REVISION | DATE | DESCRIPTION | BY |
|---|---|---|---|
| 1 | 01-06-2015 | CORK DIMENSION | RK |

PROJECT NAME: HARTFORD
PROJECT NUMBER: IM 091-2(79)

FILE NAME: sl2al32bridge_end_detail.dgn
PROJECT LEADER: K. HIGGINS
DESIGNED BY: R. KLINEFELTER
SUPERSTRUCTURE TYPICALS 43N

PLOT DATE: 06-JAN-2015
DRAWN BY: K. FRIEDLAND
CHECKED BY: J. SALVATORI
SHEET 86 OF 166

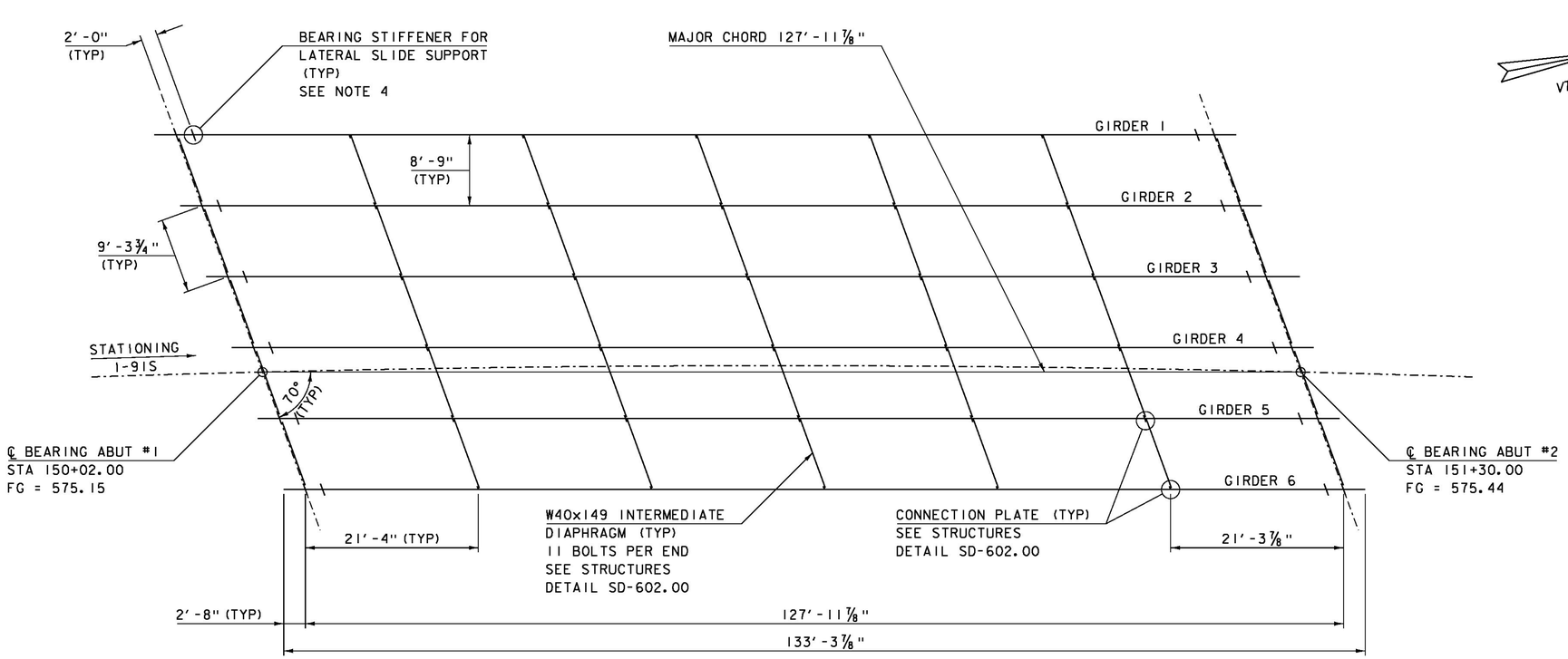


## BRIDGE 43S FRAMING PLAN

SCALE 1/8" = 1'-0"

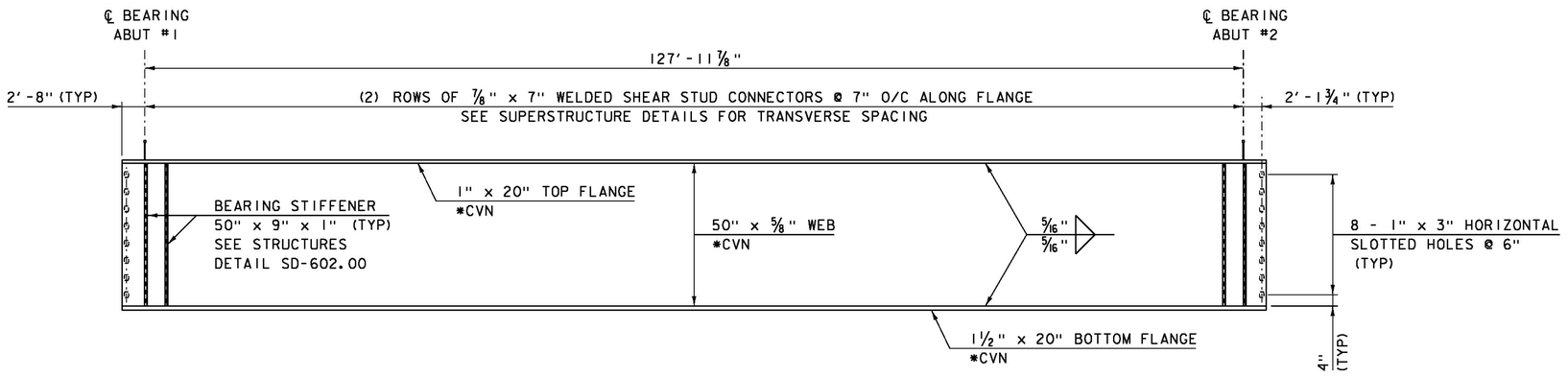


## BRIDGE 43S TYPICAL GIRDER ELEVATION

HORIZONTAL SCALE 1/8" = 1'-0"
VERTICAL SCALE 1/2" = 1'-0"

NOTES:

1. *CVN DENOTES THAT CHARPY V-NOTCH TEST IS REQUIRED.
2. ALL STEEL SHALL BE GRADE 50W.
3. PLACE DRIP PLATE ON LOW END OF EXTERIOR GIRDERS. SEE STRUCTURES DETAIL SD-601.00.
4. THE CONTRACTOR IS RESPONSIBLE FOR VERIFYING THE LOCATION OF THE BEARING STIFFENERS FOR THE LATERAL SLIDE SUPPORT.

| | |
|---|---|
| PROJECT NAME: HARTFORD | |
| PROJECT NUMBER: IM 091-2(79) | |
| FILE NAME: sl2al32fra43S.dgn | PLOT DATE: 15-DEC-2014 |
| PROJECT LEADER: K. HIGGINS | DRAWN BY: R. KLINEFELTER |
| DESIGNED BY: R. KLINEFELTER | CHECKED BY: W. LAMMER |
| BR 43S FRAMING PLAN & GIRDER ELEVATION | SHEET 87 OF 166 |

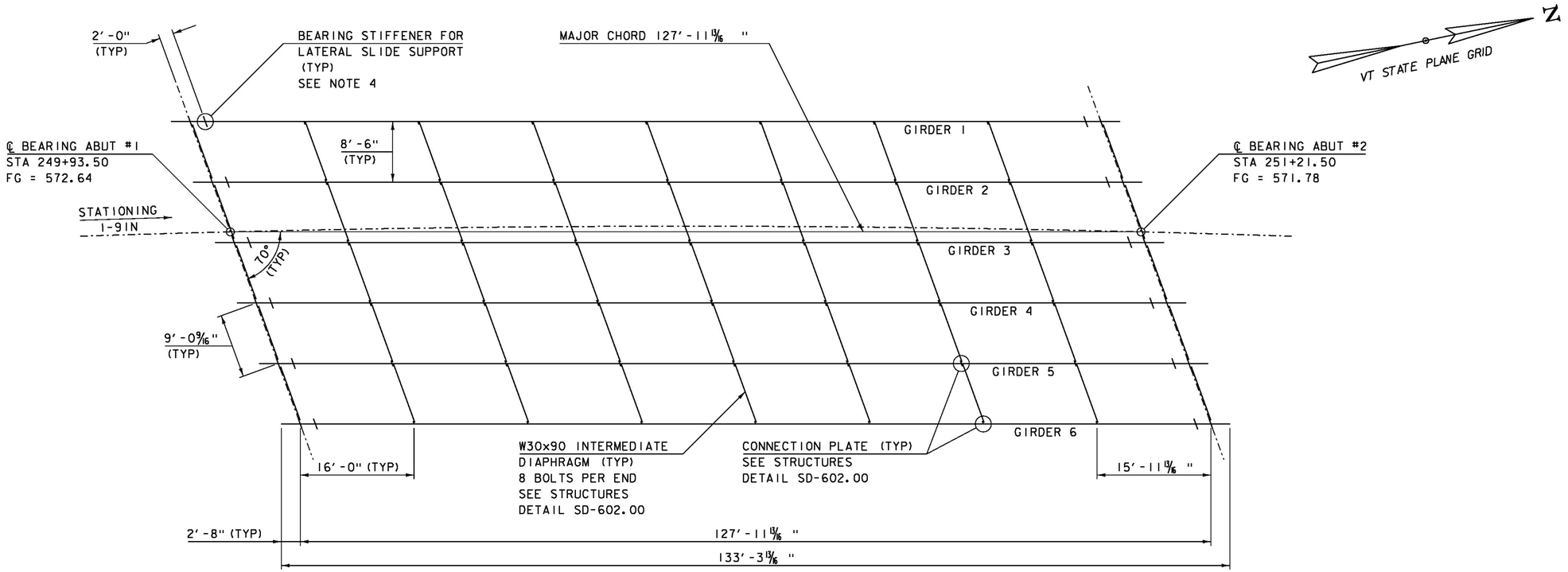


## BRIDGE 43N FRAMING PLAN

SCALE 1/8"=1'-0"

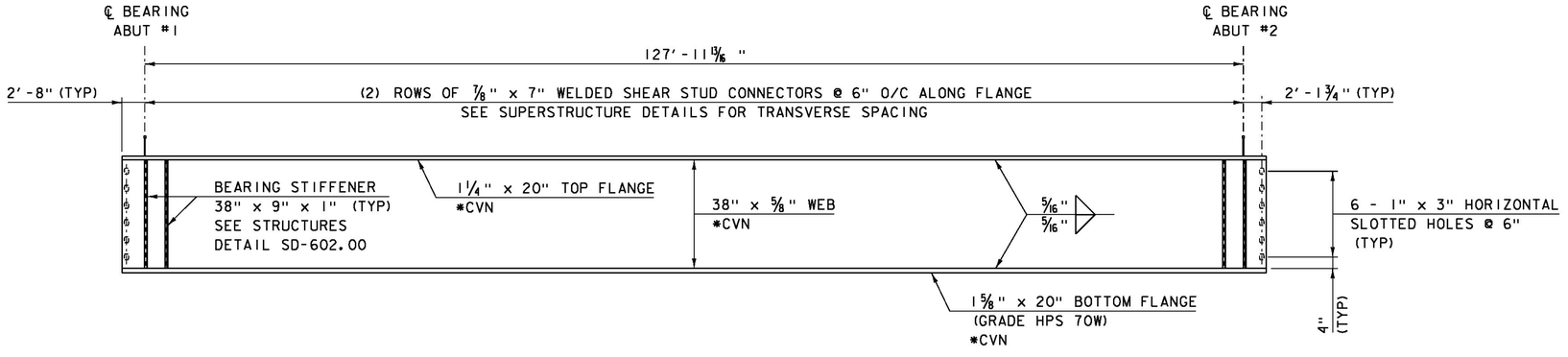


## BRIDGE 43N TYPICAL GIRDER ELEVATION

HORIZONTAL SCALE 1/8"=1'-0"
VERTICAL SCALE 1/2"=1'-0"

NOTES:

1. *CVN DENOTES THAT CHARPY V-NOTCH TEST IS REQUIRED.
2. THE GIRDER BOTTOM FLANGE SHALL BE GRADE HPS 70W. ALL OTHER STEEL SHALL BE GRADE 50W.
3. PLACE DRIP PLATE ON LOW END OF EXTERIOR GIRDERS. SEE STRUCTURES DETAIL SD-601.00.
4. THE CONTRACTOR IS RESPONSIBLE FOR VERIFYING THE LOCATION OF THE BEARING STIFFENERS FOR THE LATERAL SLIDE SUPPORT.

| | |
|---|---|
| PROJECT NAME: | HARTFORD |
| PROJECT NUMBER: | IM 091-2(79) |
| FILE NAME: sl2al32fra43N.dgn | PLOT DATE: 15-DEC-2014 |
| PROJECT LEADER: K. HIGGINS | DRAWN BY: R. KLINEFELTER |
| DESIGNED BY: R. KLINEFELTER | CHECKED BY: W. LAMMER |
| BR 43N FRAMING PLAN & GIRDER ELEVATION | SHEET 88 OF 166 |

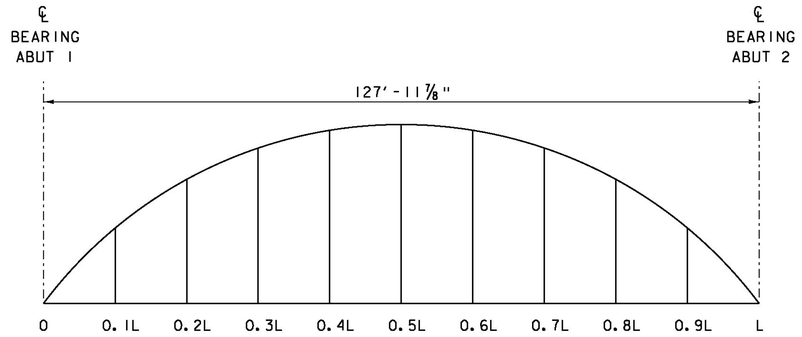


BRIDGE 43S CAMBER DIAGRAM

NOT TO SCALE

| | 0 | 0.1L | 0.2L | 0.3L | 0.4L | 0.5L | 0.6L | 0.7L | 0.8L | 0.9L | L |
|---|---|---|---|---|---|---|---|---|---|---|---|
| Steel Deflection | 0 | 9/16 | 1 1/8 | 1 1/2 | 1 13/16 | 1 7/8 | 1 13/16 | 1 1/2 | 1 1/8 | 9/16 | 0 |
| Precast Deck Panel Deflection | 0 | 9/16 | 1 1/16 | 1 1/2 | 1 3/4 | 1 13/16 | 1 3/4 | 1 1/2 | 1 1/16 | 9/16 | 0 |
| Cast-in-Place Slab Deflection | 0 | 1 1/8 | 2 1/8 | 2 15/16 | 3 3/8 | 3 9/16 | 3 3/8 | 2 15/16 | 2 1/8 | 1 1/8 | 0 |
| Superimposed Deflection | 0 | 3/16 | 3/8 | 1/2 | 5/8 | 5/8 | 5/8 | 1/2 | 3/8 | 3/16 | 0 |
| Total Slab & Super Deflection | 0 | 1 5/16 | 2 1/2 | 3 7/16 | 4 | 4 3/16 | 4 | 3 7/16 | 2 1/2 | 1 5/16 | 0 |
| Total Panel, Slab & Super Deflection | 0 | 1 7/8 | 3 9/16 | 4 15/16 | 5 3/4 | 6 | 5 3/4 | 4 15/16 | 3 9/16 | 1 7/8 | 0 |
| Total Deflection | 0 | 2 7/16 | 4 11/16 | 6 7/16 | 7 9/16 | 7 7/8 | 7 9/16 | 6 7/16 | 4 11/16 | 2 7/16 | 0 |
| Residual Camber | 0 | 9/16 | 1 | 1 5/16 | 1 9/16 | 1 5/8 | 1 9/16 | 1 5/16 | 1 | 9/16 | 0 |
| Total Camber | 0 | 3 | 5 11/16 | 7 3/4 | 9 1/8 | 9 1/2 | 9 1/8 | 7 3/4 | 5 11/16 | 3 | 0 |

BRIDGE 43S

⚠1 CAMBER AND DEFLECTION

(INCHES)

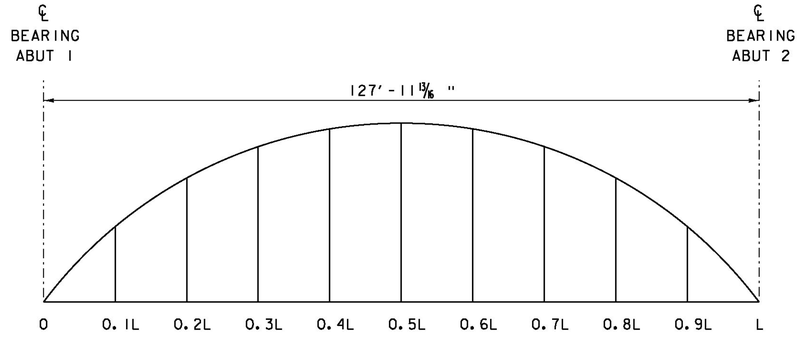


BRIDGE 43N CAMBER DIAGRAM

NOT TO SCALE

| | 0 | 0.1L | 0.2L | 0.3L | 0.4L | 0.5L | 0.6L | 0.7L | 0.8L | 0.9L | L |
|---|---|---|---|---|---|---|---|---|---|---|---|
| Steel Deflection | 0 | 7/8 | 1 5/8 | 2 1/4 | 2 5/8 | 2 3/4 | 2 5/8 | 2 1/4 | 1 5/8 | 7/8 | 0 |
| Precast Deck Panel Deflection | 0 | 7/8 | 1 5/8 | 2 1/4 | 2 5/8 | 2 3/4 | 2 5/8 | 2 1/4 | 1 5/8 | 7/8 | 0 |
| Cast-in-Place Slab Deflection | 0 | 1 11/16 | 3 3/16 | 4 3/8 | 5 1/8 | 5 3/8 | 5 1/8 | 4 3/8 | 3 3/16 | 1 11/16 | 0 |
| Superimposed Deflection | 0 | 5/16 | 9/16 | 13/16 | 15/16 | 1 | 15/16 | 13/16 | 9/16 | 5/16 | 0 |
| Total Slab & Super Deflection | 0 | 2 | 3 3/4 | 5 3/16 | 6 1/16 | 6 3/8 | 6 1/16 | 5 3/16 | 3 3/4 | 2 | 0 |
| Total Panel, Slab & Super Deflection | 0 | 2 7/8 | 5 3/8 | 7 7/16 | 8 11/16 | 9 1/8 | 8 11/16 | 7 7/16 | 5 3/8 | 2 7/8 | 0 |
| Total Deflection | 0 | 3 3/4 | 7 | 9 11/16 | 11 5/16 | 11 7/8 | 11 5/16 | 9 11/16 | 7 | 3 3/4 | 0 |
| Residual Camber | 0 | 9/16 | 1 | 1 5/16 | 1 9/16 | 1 5/8 | 1 9/16 | 1 5/16 | 1 | 9/16 | 0 |
| Total Camber | 0 | 4 5/16 | 8 | 11 | 12 7/8 | 13 1/2 | 12 7/8 | 11 | 8 | 4 5/16 | 0 |

BRIDGE 43N

⚠1 CAMBER AND DEFLECTION

(INCHES)

| REVISION | DATE | DESCRIPTION | BY |
|---|---|---|---|
| ⚠1 | 12-16-2014 | ADDITIONAL INFORMATION ADDED | RK |

PROJECT NAME: HARTFORD
PROJECT NUMBER: IM 091-2(79)

FILE NAME: s12a132cam.dgn
PROJECT LEADER: K. HIGGINS
DESIGNED BY: R. KLINEFELTER
CAMBER & DEFLECTION

PLOT DATE: 16-DEC-2014
DRAWN BY: K. FRIEDLAND
CHECKED BY: W. LAMMER
SHEET 89 OF 166

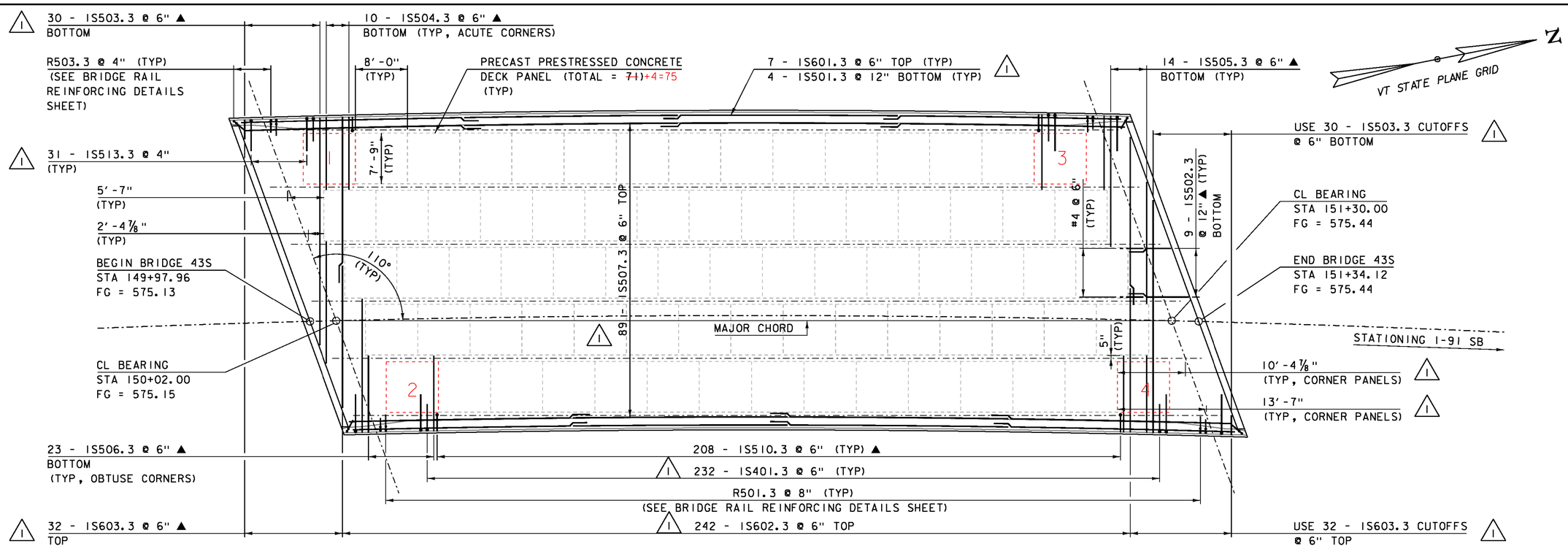


## BRIDGE 43S DECK REINFORCING PLAN

SCALE 1/8"=1'-0"

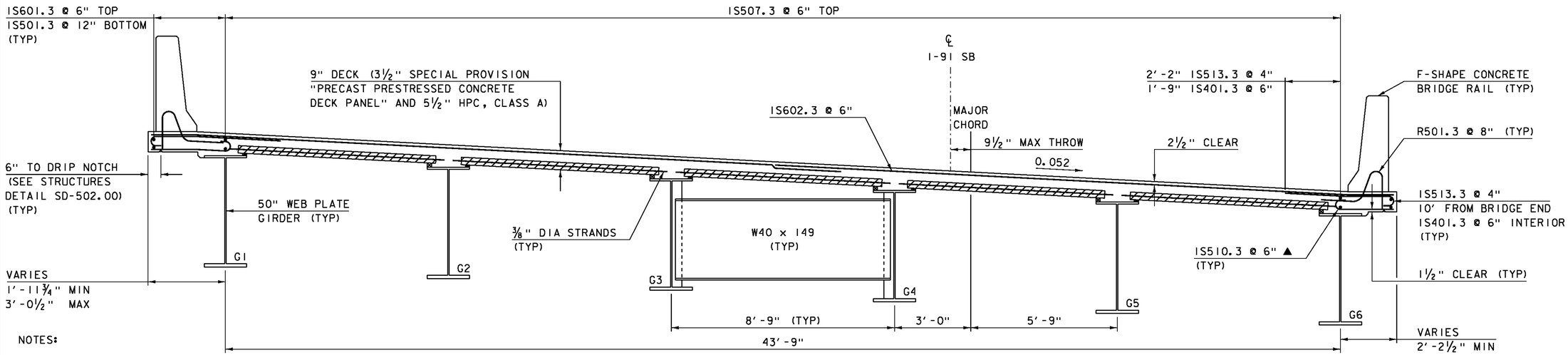


## BRIDGE 43S TYPICAL DECK REINFORCEMENT

SCALE 1/2"=1'-0"

NOTES:

1) SPLICES FOR TOP TRANSVERSE AND LONGITUDINAL DECK REINFORCING STEEL SHALL NOT BE LOCATED OVER PANEL JOINTS.

2) PRIOR TO PLACING THE DECK CONCRETE, LAITANCE OR OTHER CONTAMINATES THAT WOULD INTERFERE WITH FULL BOND TO THE PANELS SHALL BE REMOVED BY AN APPROVED METHOD PER SECTION 510.12(b)(4).

3) PRIOR TO PLACING THE DECK CONCRETE, THE PRECAST PRESTRESSED CONCRETE DECK PANELS SHALL BE WETTED IN ACCORDANCE WITH SECTION 501.10(d).

| REVISION | DATE | DESCRIPTION | BY |
|---|---|---|---|
| 1 | 01-06-2015 | REINFORCING STEEL BAR COUNTS AND DIMENSIONS TO DECK PANELS | RK |

NOTE:
NF = NEAR FACE
FF = FAR FACE
EF = EACH FACE
▲ = CUT TO FIT IN FIELD
3" CLEAR, UNLESS OTHERWISE SPECIFIED ON THE PLANS.
2'-2" BAR LAP FOR #5 REINFORCING
2'-7" BAR LAP FOR #6 REINFORCING

PROJECT NAME: HARTFORD
PROJECT NUMBER: IM 091-2(79)

FILE NAME: sl2al32sup43S.dgn
PROJECT LEADER: K. HIGGINS
DESIGNED BY: R. KLINEFELTER
43S DECK REINFORCING PLAN
PLOT DATE: 06-JAN-2015
DRAWN BY: K. FRIEDLAND
CHECKED BY: R. KLINEFELTER
SHEET 90 OF 166

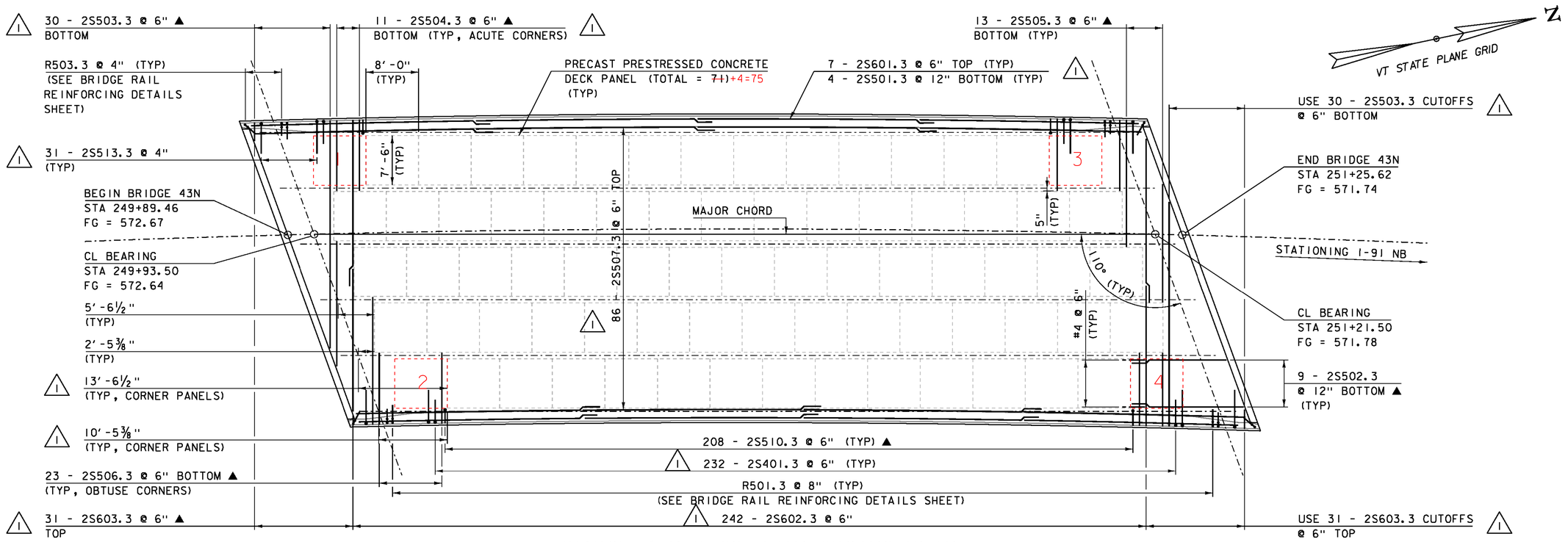


## BRIDGE 43N DECK REINFORCING PLAN

SCALE ⅛"=1'-0"

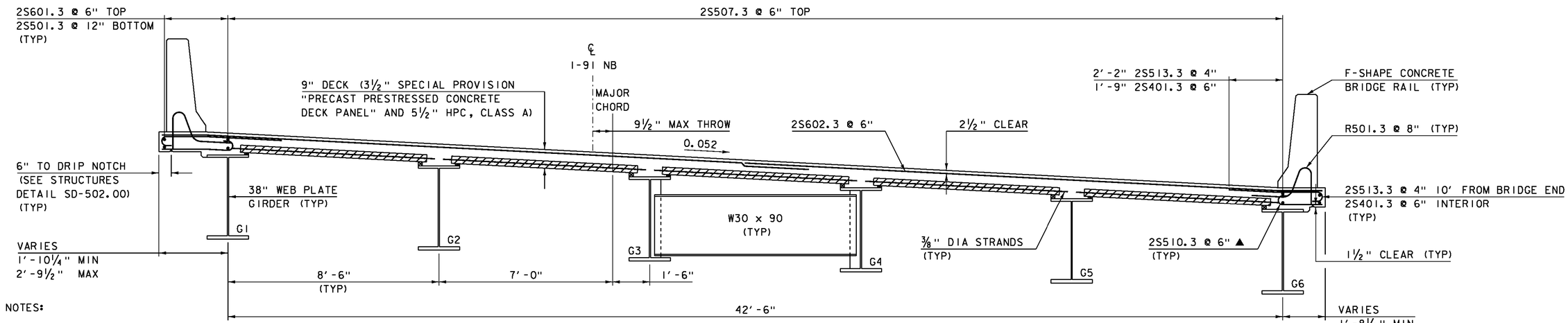


## BRIDGE 43N TYPICAL DECK REINFORCEMENT

SCALE ½"=1'-0"

NOTES:

1) SPLICES FOR TOP TRANSVERSE AND LONGITUDINAL DECK REINFORCING STEEL SHALL NOT BE LOCATED OVER PANEL JOINTS.

2) PRIOR TO PLACING THE DECK CONCRETE, LAITANCE OR OTHER CONTAMINATES THAT WOULD INTERFERE WITH FULL BOND TO THE PANELS SHALL BE REMOVED BY AN APPROVED METHOD PER SECTION 510.12(b)(4).

3) PRIOR TO PLACING THE DECK CONCRETE, THE PRECAST PRESTRESSED CONCRETE DECK PANELS SHALL BE WETTED IN ACCORDANCE WITH SECTION 501.10(d).

| REVISION | DATE | DESCRIPTION | BY |
|---|---|---|---|
| 1 | 01-05-2015 | REINFORCING STEEL BAR COUNTS AND DIMENSIONS TO DECK PANELS | RK |

NOTE:
NF = NEAR FACE
FF = FAR FACE
EF = EACH FACE
▲ = CUT TO FIT IN FIELD
3" CLEAR, UNLESS OTHERWISE SPECIFIED ON THE PLANS.
2'-2" BAR LAP FOR #5 REINFORCING
2'-7" BAR LAP FOR #6 REINFORCING

PROJECT NAME: HARTFORD
PROJECT NUMBER: IM 091-2(79)

FILE NAME: sl2al32sup43N.dgn
PROJECT LEADER: K. HIGGINS
DESIGNED BY: R. KLINEFELTER
43N DECK REINFORCING PLAN

PLOT DATE: 05-JAN-2015
DRAWN BY: K. FRIEDLAND
CHECKED BY: R. KLINEFELTER
SHEET 91 OF 166

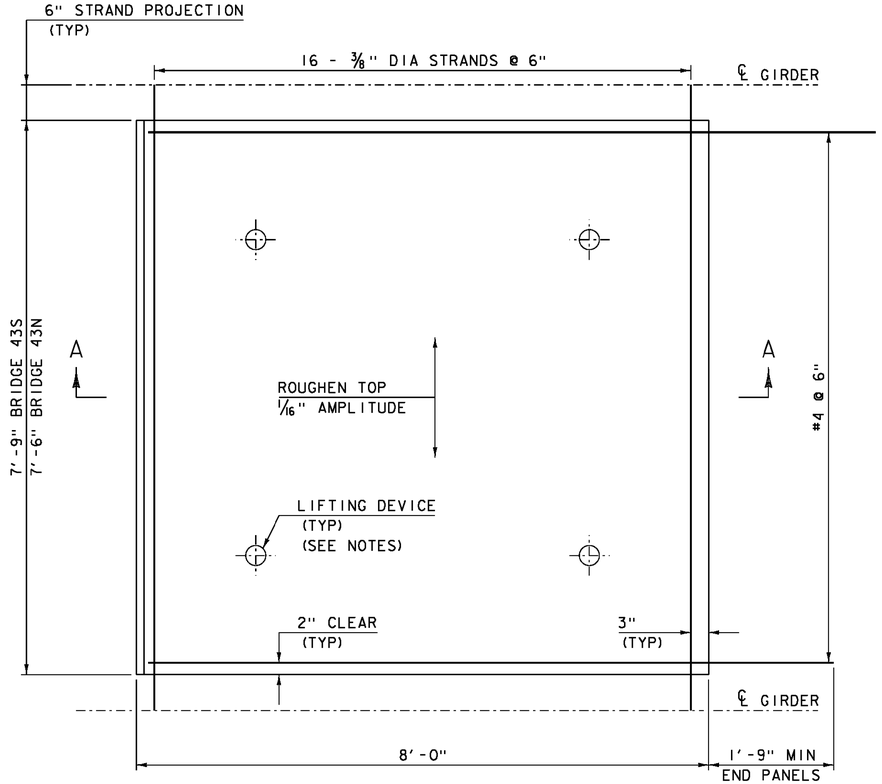


## PRECAST PRESTRESSED CONCRETE DECK PANEL PLAN

SCALE 1"=1'-0"

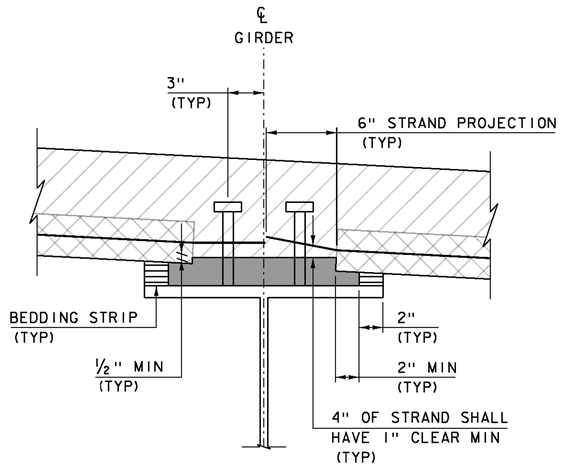


## HAUNCH DETAIL

SCALE 2"=1'-0"

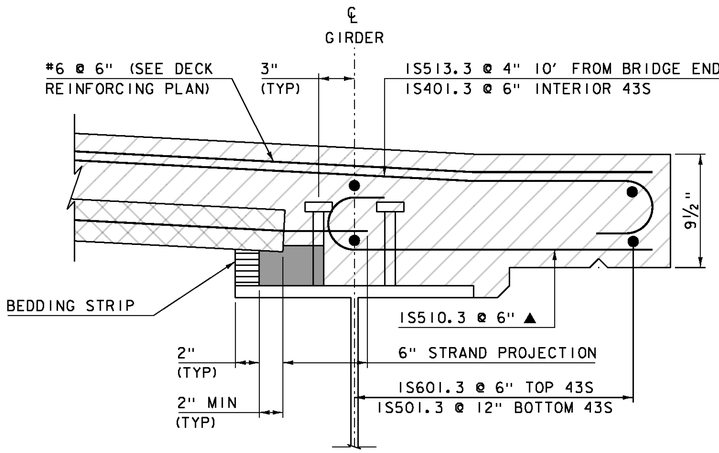


BRIDGE 43S SHOWN, BRIDGE 43N SIMILAR.

## TYPICAL OVERHANG

SCALE 2"=1'-0"

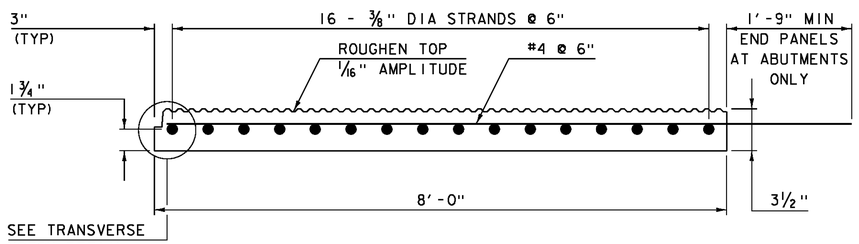


## SECTION A-A

HOR. SCALE 1"=1'-0"
VER. SCALE 2"=1'-0"

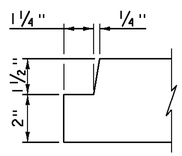


## TRANSVERSE NOTCH DETAIL

SCALE 4"=1'-0"

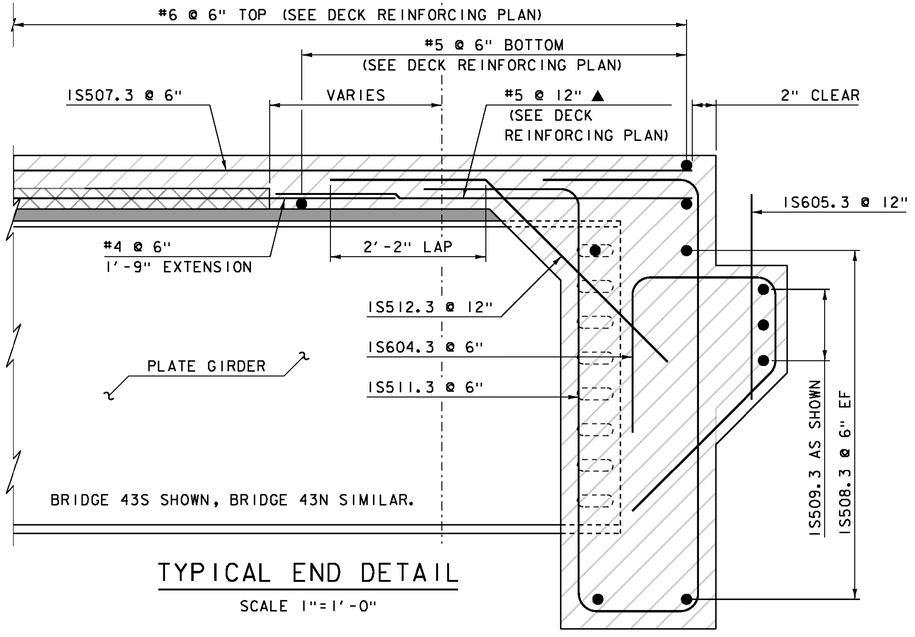


BRIDGE 43S SHOWN, BRIDGE 43N SIMILAR.

## TYPICAL END DETAIL

SCALE 1"=1'-0"

NOTES:

1) LIFTING DEVICE SHALL BE DESIGNED BY THE FABRICATOR.

2) SHEAR CONNECTORS AND STRANDS PROJECTING FROM PANELS SHALL BE CLEANED OF ANY EXCESS MORTAR AFTER GROUT BED PLACEMENT.

3) STRANDS PROJECTING FROM PANELS SHALL BE SECURED IN PLACE DURING DECK CONCRETE PLACEMENT.

4) OMIT TRANSVERSE NOTCH ON END PANELS AT ABUTMENTS.

NOTE:

NF = NEAR FACE
FF = FAR FACE
EF = EACH FACE
▲ = CUT TO FIT IN FIELD
3" CLEAR, UNLESS OTHERWISE SPECIFIED ON THE PLANS.
2'-2" BAR LAP UNLESS OTHERWISE SPECIFIED ON THE PLANS.

LEGEND

- CONCRETE, HPC CLASS A
- PRECAST PRESTESSED CONCRETE DECK PANEL
- HPC CLASS AA ~~MORTAR, TYPE IV~~

| | |
|---|---|
| PROJECT NAME: | HARTFORD |
| PROJECT NUMBER: | IM 091-2(79) |
| FILE NAME: sl2al32sup43S.dgn | PLOT DATE: 15-DEC-2014 |
| PROJECT LEADER: K. HIGGINS | DRAWN BY: K. FRIEDLAND |
| DESIGNED BY: R. KLINEFELTER | CHECKED BY: W. LAMMER |
| SUPERSTRUCTURE DETAILS | SHEET 92 OF 166 |

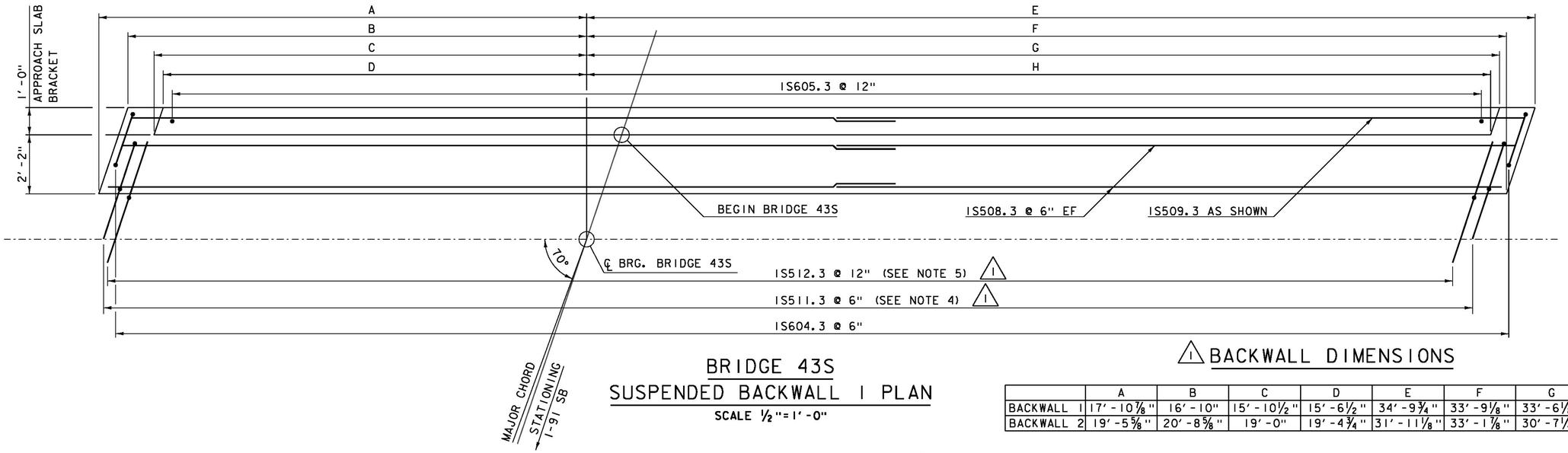


## BRIDGE 43S
## SUSPENDED BACKWALL 1 PLAN

SCALE ½"=1'-0"

### 1 BACKWALL DIMENSIONS

| | A | B | C | D | E | F | G | H |
|---|---|---|---|---|---|---|---|---|
| BACKWALL 1 | 17'-10⅞" | 16'-10" | 15'-10½" | 15'-6½" | 34'-9¾" | 33'-9⅛" | 33'-6⅛" | 33'-2⅛" |
| BACKWALL 2 | 19'-5⅝" | 20'-8⅝" | 19'-0" | 19'-4¾" | 31'-11⅛" | 33'-1⅞" | 30'-7¼" | 30'-11⅞" |

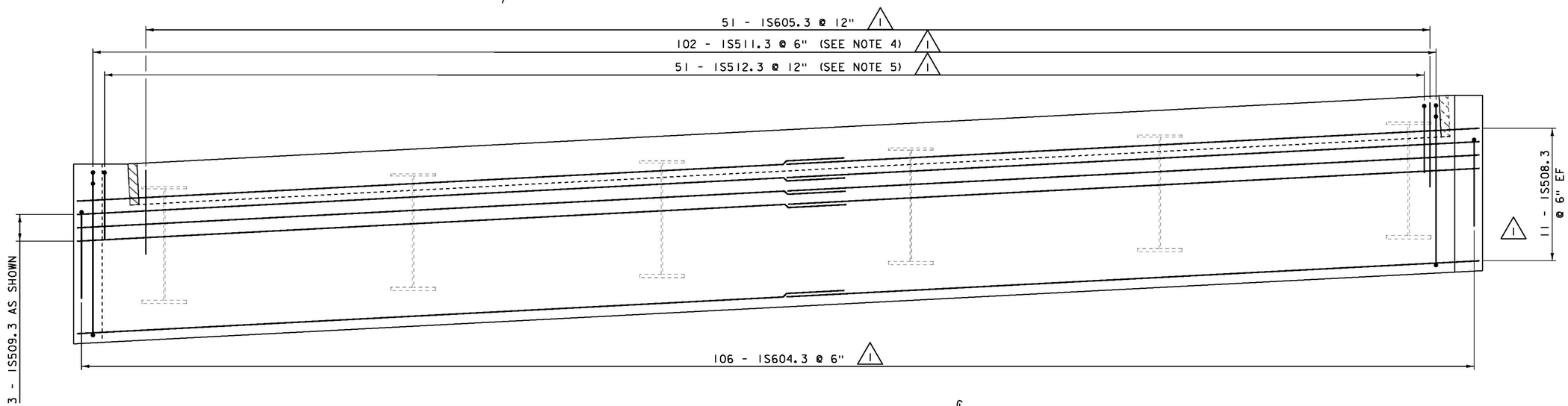


## BRIDGE 43S
## SUSPENDED BACKWALL 1 ELEVATION

SCALE ½"=1'-0"

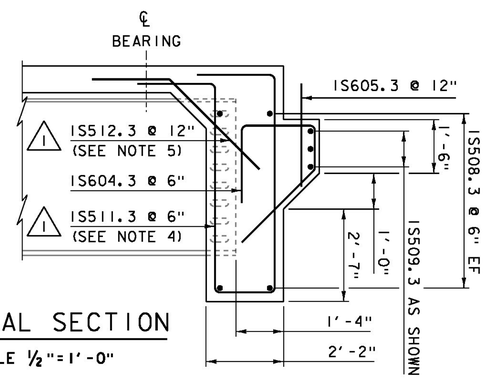


## TYPICAL SECTION

SCALE ½"=1'-0"

NOTES:

1) BACKWALL 1 SHOWN. BACKWALL 2 SIMILAR.

2) BRIDGE DECK REINFORCING NOT SHOWN FOR CLARITY.

3) A TEMPLATE SHALL BE USED TO LAYOUT IS605.3 BARS TO ENSURE PROPER ALIGNMENT WITH DUCTS IN APPROACH SLABS.

1 4) AT EACH GIRDER LOCATION, BUNDLE (2) IS511.3 BARS ON EACH SIDE OF THE GIRDER FLANGE AND OMIT THE (3) IS511.3 BARS THAT FALL WITHIN THE WIDTH OF THE FLANGE.

1 5) AT EACH GIRDER LOCATION, OMIT (1) IS512.3 BAR THAT FALLS WITHIN THE WIDTH OF THE FLANGE.

| REVISION | DATE | DESCRIPTION | BY |
|---|---|---|---|
| 1 | 01-06-2015 | REINFORCING STEEL BAR COUNTS, NOTES, AND BACKWALL 2 DIMENSIONS | RK |

### NOTE:

NF = NEAR FACE
FF = FAR FACE
EF = EACH FACE
▲ = CUT TO FIT IN FIELD
3" CLEAR, UNLESS OTHERWISE SPECIFIED ON THE PLANS.
2'-2" BAR LAP FOR #5 REINFORCING

PROJECT NAME: HARTFORD
PROJECT NUMBER: IM 091-2(79)

FILE NAME: sl2al32Backwall43S.dgn
PROJECT LEADER: K. HIGGINS
DESIGNED BY: R. KLINEFELTER
43S SUSPENDED BACKWALL DETAILS

PLOT DATE: 06-JAN-2015
DRAWN BY: K. FRIEDLAND
CHECKED BY: R. KLINEFELTER
SHEET 93 OF 166

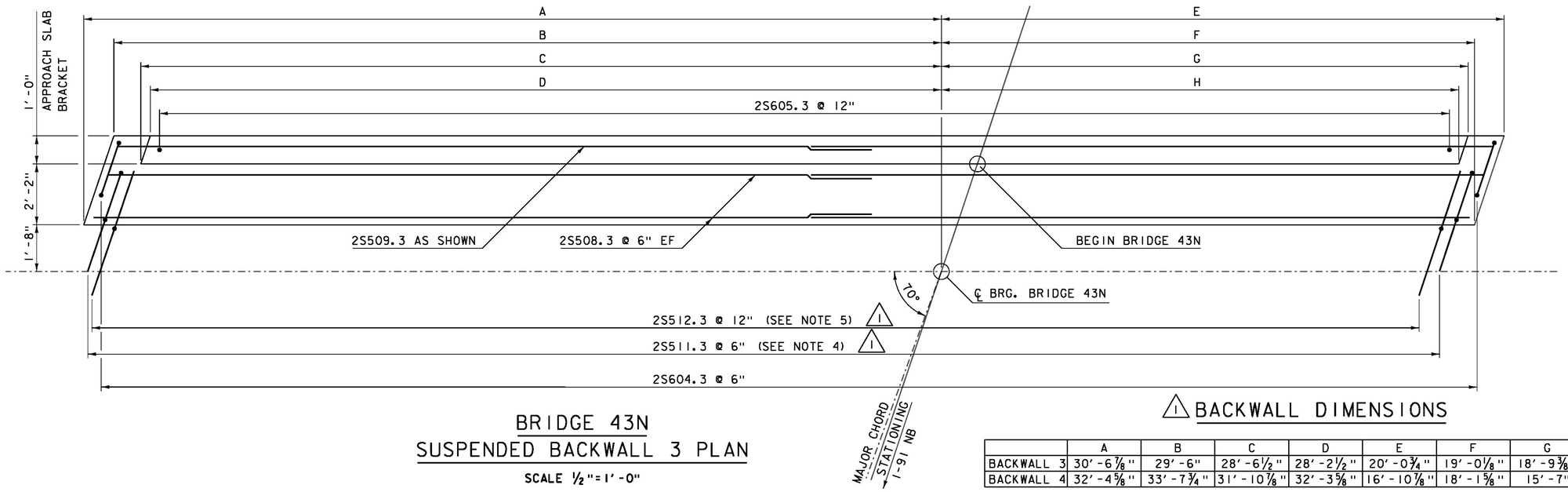


## BRIDGE 43N
## SUSPENDED BACKWALL 3 PLAN

SCALE ½"=1'-0"

### ⚠1 BACKWALL DIMENSIONS

| | A | B | C | D | E | F | G | H |
|---|---|---|---|---|---|---|---|---|
| BACKWALL 3 | 30'-6⅞" | 29'-6" | 28'-6½" | 28'-2½" | 20'-0¾" | 19'-0⅛" | 18'-9⅜" | 18'-5⅜" |
| BACKWALL 4 | 32'-4⅝" | 33'-7¾" | 31'-10⅞" | 32'-3⅝" | 16'-10⅞" | 18'-1⅝" | 15'-7" | 15'-11¾" |

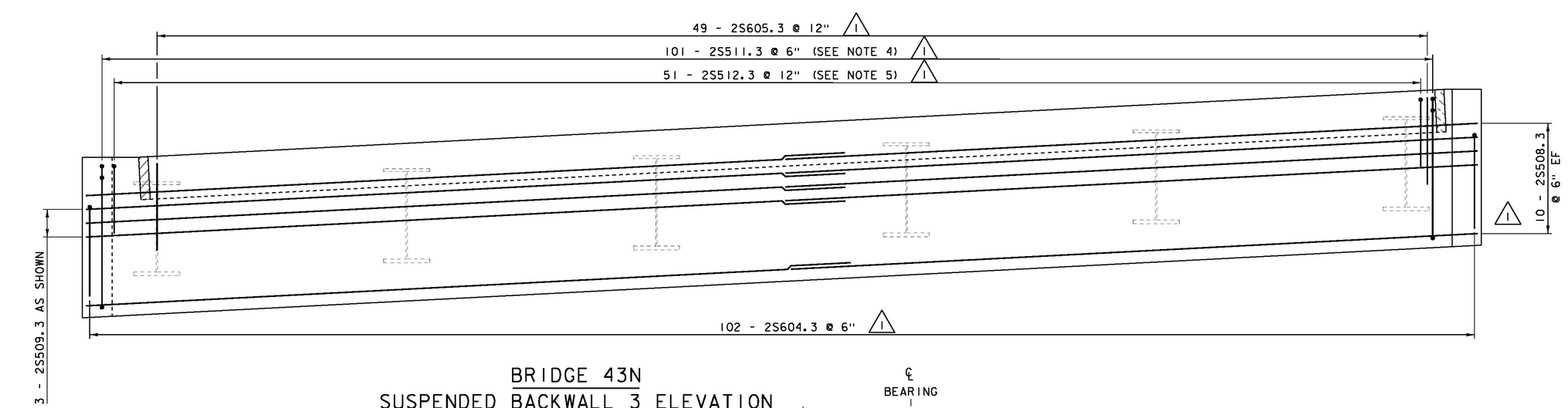


## BRIDGE 43N
## SUSPENDED BACKWALL 3 ELEVATION

SCALE ½"=1'-0"

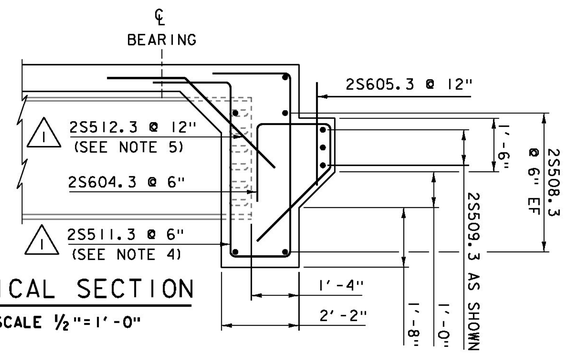


## TYPICAL SECTION

SCALE ½"=1'-0"

NOTES:

1) BACKWALL 3 SHOWN. BACKWALL 4 SIMILAR.

2) BRIDGE DECK REINFORCING NOT SHOWN FOR CLARITY.

3) A TEMPLATE SHALL BE USED TO LAYOUT 2S605.3 BARS TO ENSURE PROPER ALIGNMENT WITH DUCTS IN APPROACH SLABS.

⚠1 4) AT EACH GIRDER LOCATION, BUNDLE (2) 2S511.3 BARS ON EACH SIDE OF THE GIRDER FLANGE AND OMIT THE (3) 2S511.3 BARS THAT FALL WITHIN THE WIDTH OF THE FLANGE.

⚠1 5) AT EACH GIRDER LOCATION, OMIT (1) 2S512.3 BAR THAT FALLS WITHIN THE WIDTH OF THE FLANGE.

| REVISION | DATE | DESCRIPTION | BY |
|---|---|---|---|
| ⚠1 | 01-06-2015 | REINFORCING STEEL BAR COUNTS, NOTES, AND BACKWALL 4 DIMENSIONS | RK |

NOTE:
NF = NEAR FACE
FF = FAR FACE
EF = EACH FACE
▲ = CUT TO FIT IN FIELD
3" CLEAR, UNLESS OTHERWISE SPECIFIED ON THE PLANS.
2'-2" BAR LAP FOR #5 REINFORCING

PROJECT NAME: HARTFORD
PROJECT NUMBER: IM 091-2(79)

FILE NAME: sl2al32Backwall43N.dgn
PROJECT LEADER: K. HIGGINS
DESIGNED BY: R. KLINEFELTER
43N SUSPENDED BACKWALL DETAILS

PLOT DATE: 06-JAN-2015
DRAWN BY: K. FRIEDLAND
CHECKED BY: R. KLINEFELTER
SHEET 94 OF 166

## BEARING NOTES

1) BEARINGS SHALL BE PAID FOR UNDER ITEM 531.18 “BEARING DEVICE ASSEMBLY, ELASTOMERIC PAD WITH EXTERNAL LOAD PLATES”. BEARING DEVICES SHALL CONFORM TO APPLICABLE SUBSECTIONS OF SECTIONS 531 AND 731.

2) ALL MATERIALS SHALL CONFORM TO SECTION 14 OF THE AASHTO LRFD BRIDGE DESIGN SPECIFICATIONS AND SECTION 18 OF AASHTO LRFD BRIDGE CONSTRUCTION SPECIFICATIONS AND ALL AASHTO OR ASTM SPECIFICATIONS REFERENCED IN THE CONTRACT DOCUMENTS.

3) THE ELASTOMERIC COMPOUND SHALL BE VIRGIN CRYSTALLIZATION RESISTANT POLYCHLOROPRENE (NEOPRENE) OR VIRGIN NATURAL POLYISOPRENE (NATURAL RUBBER) AS THE RAW POLYMER. THE RESULTING PRODUCT SHALL BE FREE OF POROUS AREAS, WEAK SECTIONS, BUBBLES, FOREIGN MATTER, OR OTHER DEFECTS AFFECTING SERVICEABILITY. IT SHALL CONFORM TO THE REQUIREMENTS OF AASHTO M 251.

4) BEARING WAS DESIGNED USING METHOD A, WITH A DESIGN HARDNESS OF 50 POINTS AND A DESIGN SHEAR MODULUS OF 110 PSI.

5) ALTERNATE CONFIGURATIONS FOR BEARINGS MAY BE SUBMITTED FOR APPROVAL. ANY ALTERNATE SUBMITTED SHALL BE DESIGNED AND STAMPED IN ACCORDANCE WITH SUBSECTION 105.03 AND SHALL MEET THE DESIGN LOADS AND CRITERIA SHOWN ON THIS SHEET. ANY ALTERNATE SHALL BE DESIGNED PER THE LATEST AASHTO LRFD BRIDGE DESIGN SPECIFICATIONS. BRIDGE SEAT ELEVATIONS MAY BE REVISED TO ACCOMMODATE AN ALTERNATE CONFIGURATION.

6) STEEL REINFORCED ELASTOMERIC PADS SHALL BE WITHIN THE TOLERANCES LISTED IN TABLE 2 IN AASHTO M251. EXTERNAL LOAD PLATES SHALL BE WITHIN THE TOLERANCES GIVEN IN SECTION 18 OF THE AASHTO LRFD BRIDGE CONSTRUCTION SPECIFICATIONS.

7) BEARING SHALL BE SET LEVEL AND PARALLEL. THE CONCRETE UNDER THE BEARING DEVICE SHALL BE LEVEL.

8) DURING ANY WELDING, SURFACES IN CONTACT WITH THE ELASTOMER SHALL BE RESTRICTED TO 200 DEGREES FAHRENHEIT. TEMPERATURE SHALL BE DETERMINED BY TEMPERATURE INDICATING WAX PENCILS OR OTHER SUITABLE MEANS.

9) PRIOR TO ORDERING MATERIALS AND STARTING THE WORK, THE CONTRACTOR SHALL SUBMIT A DRILLING AND MORTARING PROPOSAL TO THE ENGINEER FOR APPROVAL, INCLUDING A PREMIXED MORTAR MATERIAL BRAND NAME.

10) THE DRILLED HOLES TO BE MORTARED SHALL BE THOROUGHLY CLEANED, WETTED, AND FREE OF STANDING WATER.

11) THE MORTAR SHALL BE MIXED IN A MECHANICAL MIXER ACCORDING TO THE MANUFACTURER'S RECOMMENDATIONS AND SHALL BE READILY POURABLE SO THAT WHEN POURED IT COMPLETELY FILLS THE REMAINING HOLE CAVITIES. THE PLACEMENT OF MORTAR FOR EACH BEARING SHALL BE CONTINUOUS AND COMPLETE AT ALL HOLE LOCATIONS.

12) ALL EXPOSED MORTAR SHALL BE CURED FOR A PERIOD OF NOT LESS THAN THREE (3) DAYS BY THE WETTED BURLAP METHOD IN ACCORDANCE WITH SECTION 501. CURING SHALL COMMENCE AS SOON AS PRACTICAL AFTER MORTAR PLACEMENT. THE CONTRACTOR SHALL NOT APPLY ANY FORCES TO THE BEARING RETAINERS DURING THE CURING PERIOD.

13) THE BEARING MANUFACTURER SHALL INCLUDE A TEMPERATURE SETTING TABLE ON THE FABRICATION DRAWINGS.

14) BRIDGE SEAT ELEVATIONS ARE BASED ON THE BEARING HEIGHTS SHOWN. PRIOR TO CASTING SUBSTRUCTURE UNITS, THE CONTRACTOR SHALL SUBMIT TO THE ENGINEER THE PROPOSED BEARING HEIGHT AS PROVIDED BY THE MANUFACTURER AND ANY ELEVATION MODIFICATIONS REQUIRED BEFORE CONSTRUCTING SUBSTRUCTURE UNITS.

15) ANCHOR BOLTS FURNISHED FOR BEARING SIDE RETAINERS SHALL CONFORM TO SUBSECTION 714.08. THE BOLTS, NUTS, AND WASHERS FURNISHED SHALL BE TESTED AND CERTIFIED AS MEETING THE REQUIREMENTS OF THE ZINC THICKNESS TEST AS SPECIFIED IN SUBSECTION 714.05, IN ADDITION TO ANY OTHER TEST AND CERTIFICATION REQUIREMENTS.

16) THE WELDS FOR THE SOLE PLATE CONNECTION SHOULD ONLY BE ALONG THE LONGITUDINAL GIRDER AXIS. TRANSVERSE JOINTS SHOULD BE SEALED WITH AN ACCEPTABLE CAULKING MATERIAL.

17) BEARING RETAINER ASSEMBLIES SHALL BE GALVANIZED IN ACCORDANCE WITH SUBSECTION 726.08 OR METALIZED IN ACCORDANCE WITH SUBSECTION 726.09.

18) METALIZING OR GALVANIZING THAT HAS BEEN DAMAGED SHALL BE REPAIRED USING THE METHODS DESCRIBED IN SUBSECTION 726.08.

19) ELASTOMERIC BEARINGS SHALL BE VULCANIZED TO SOLE PLATES.

20) ALL LOADS PROVIDED ARE UNFACTORED.

| LOCATION | | BRIDGE 43S ABUTMENT 1 | BRIDGE 43S ABUTMENT 2 | BRIDGE 43N ABUTMENT 3 | BRIDGE 43N ABUTMENT 4 |
|---|---|---|---|---|---|
| FIXED (F) or EXPANSION (EXP) | | EXP | EXP | EXP | EXP |
| QUANTITY REQUIRED | | 6 | 6 | 6 | 6 |
| DL+SDL (kips) | | 167.3 | 167.3 | 158.9 | 158.9 |
| LL+IM (kips) | | 120.3 | 120.3 | 119.0 | 119.0 |
| TOTAL DESIGN REACTION (kips) | | 287.6 | 287.6 | 277.9 | 277.9 |
| ASKEW ANGLE (degrees) | A | 70 | 70 | 70 | 70 |
| ELASTOMERIC PAD (in) | L | 13 | 13 | 13 | 13 |
| | W | 20 | 20 | 20 | 20 |
| | Ns | 7 | 7 | 7 | 7 |
| | Ts | 0.075 | 0.075 | 0.075 | 0.075 |
| | Ne | 6 | 6 | 6 | 6 |
| | Te | 3/8 | 3/8 | 3/8 | 3/8 |
| | Tc | 1/8 | 1/8 | 1/8 | 1/8 |
| | Hp | 3.025 | 3.025 | 3.025 | 3.025 |
| ANCHOR BOLTS (in) | PER BRG. | 4 | 4 | 4 | 4 |
| | DIA.a | 1 1/2 | 1 1/2 | 1 1/2 | 1 1/2 |
| | Ha | 21 | 21 | 21 | 21 |
| ANCHOR BOLT HOLES (in) | DIA.h | 1 5/8 | 1 5/8 | 1 5/8 | 1 5/8 |
| | Ez | 3 | 3 | 3 | 3 |
| | Ex | 3 1/4 | 3 1/4 | 3 1/4 | 3 1/4 |
| WELD SIZE (in) | F | 5/16 | 5/16 | 5/16 | 5/16 |
| SOLE PLATE (in) | Ws | 22 | 22 | 22 | 22 |
| | Ls | 15 | 15 | 15 | 15 |
| | T1 | 1 1/2 | 1 1/2 | 1 1/2 | 1 5/8 |
| | T2 | 1 11/16 | 1 11/16 | 1 1/2 | 1 1/2 |
| RETAINER (in) | Lr | 15 | 15 | 15 | 15 |
| | Or | 5/8 | 5/8 | 5/8 | 5/8 |
| GIRDER EXTENSION (in) | EXT | 32 | 32 | 32 | 32 |
| BEARING HEIGHT (in) | Ht | 4.619 | 4.619 | 4.525 | 4.588 |

PROJECT NAME: HARTFORD
PROJECT NUMBER: IM 091-2(79)

FILE NAME: sl2al32bearings.dgn
PROJECT LEADER: K. HIGGINS
DESIGNED BY: R. KLINEFELTER
BEARING NOTES

PLOT DATE: 15-DEC-2014
DRAWN BY: R. KLINEFELTER
CHECKED BY: W. LAMMER

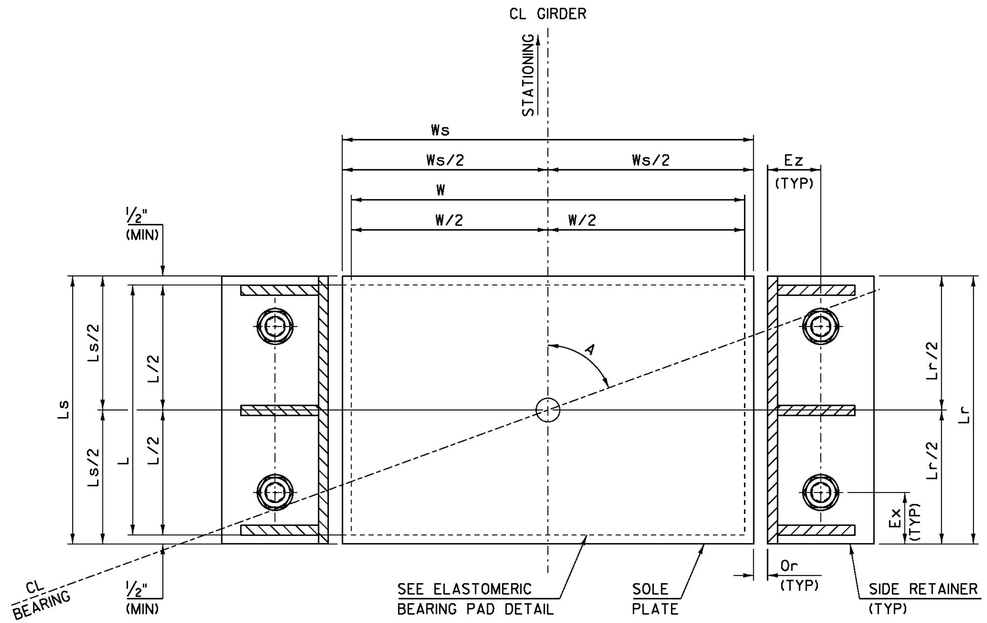


EXPANSION BEARING TYPICAL PLAN
(NTS)

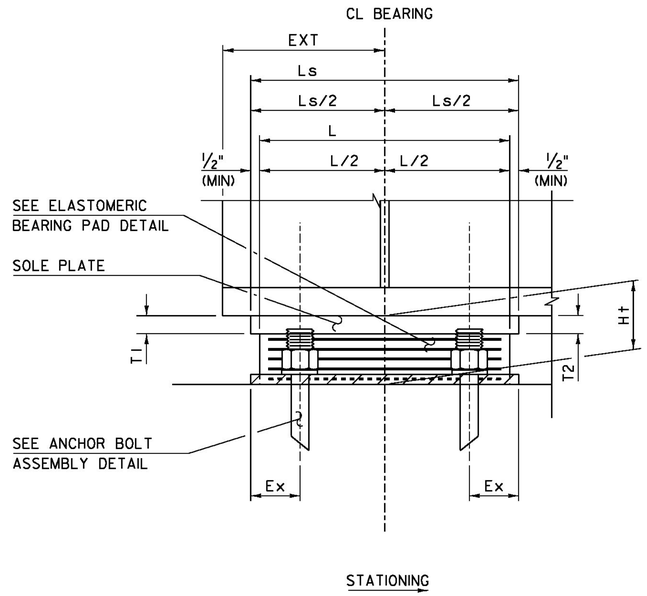


EXPANSION BEARING TYPICAL SECTION
(NTS)

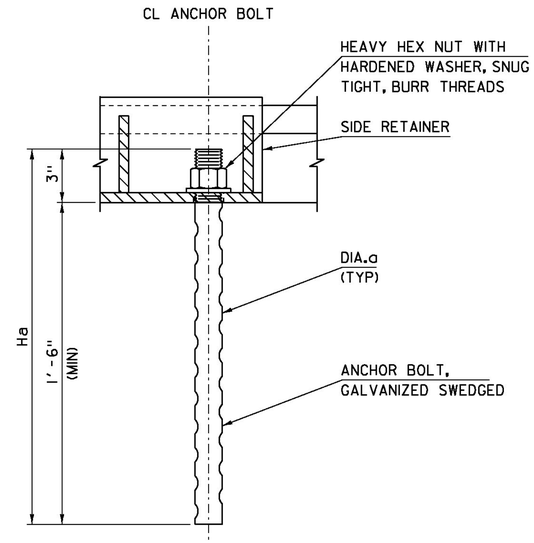


ANCHOR BOLT ASSEMBLY DETAIL
(NTS)

NOTES:
1. SECTION SHOWN AT BEGIN BRIDGE. ACTUAL LOCATION MAY VARY.
2. T2 IS ALWAYS UP STATION OF T1.
3. VERTICAL LEG AND PLATES REMOVED FOR CLARITY.

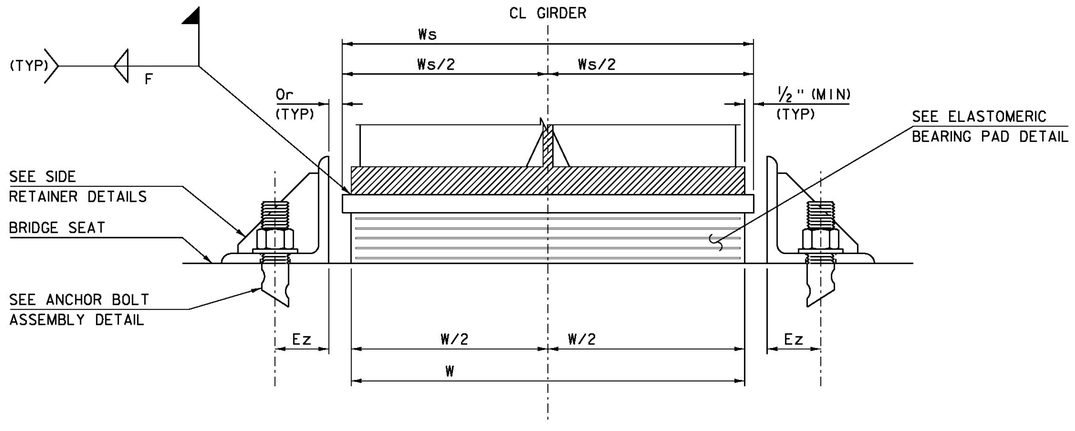


EXPANSION BEARING TYPICAL ELEVATION
(NTS)

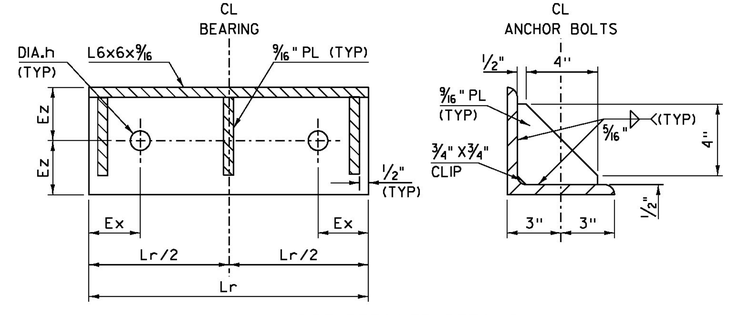


SIDE RETAINER DETAILS
(NTS)

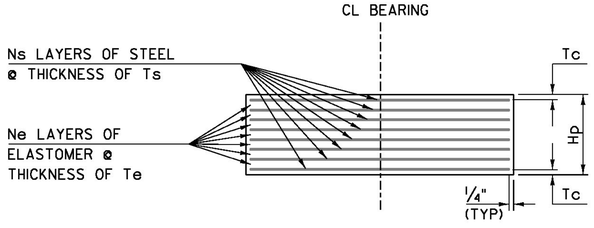


ELASTOMERIC BEARING PAD DETAIL
(NTS)

NOTE:
1. SEE BEARING TABLE ON BEARING NOTES SHEET FOR DIMENSIONS.

| | |
|---|---|
| PROJECT NAME: HARTFORD | |
| PROJECT NUMBER: IM 091-2(79) | |
| FILE NAME: sl2al32bearings.dgn | PLOT DATE: 15-DEC-2014 |
| PROJECT LEADER: K. HIGGINS | DRAWN BY: R. KLINEFELTER |
| DESIGNED BY: R. KLINEFELTER | CHECKED BY: W. LAMMER |
| BEARING DETAILS | SHEET 96 OF 166 |

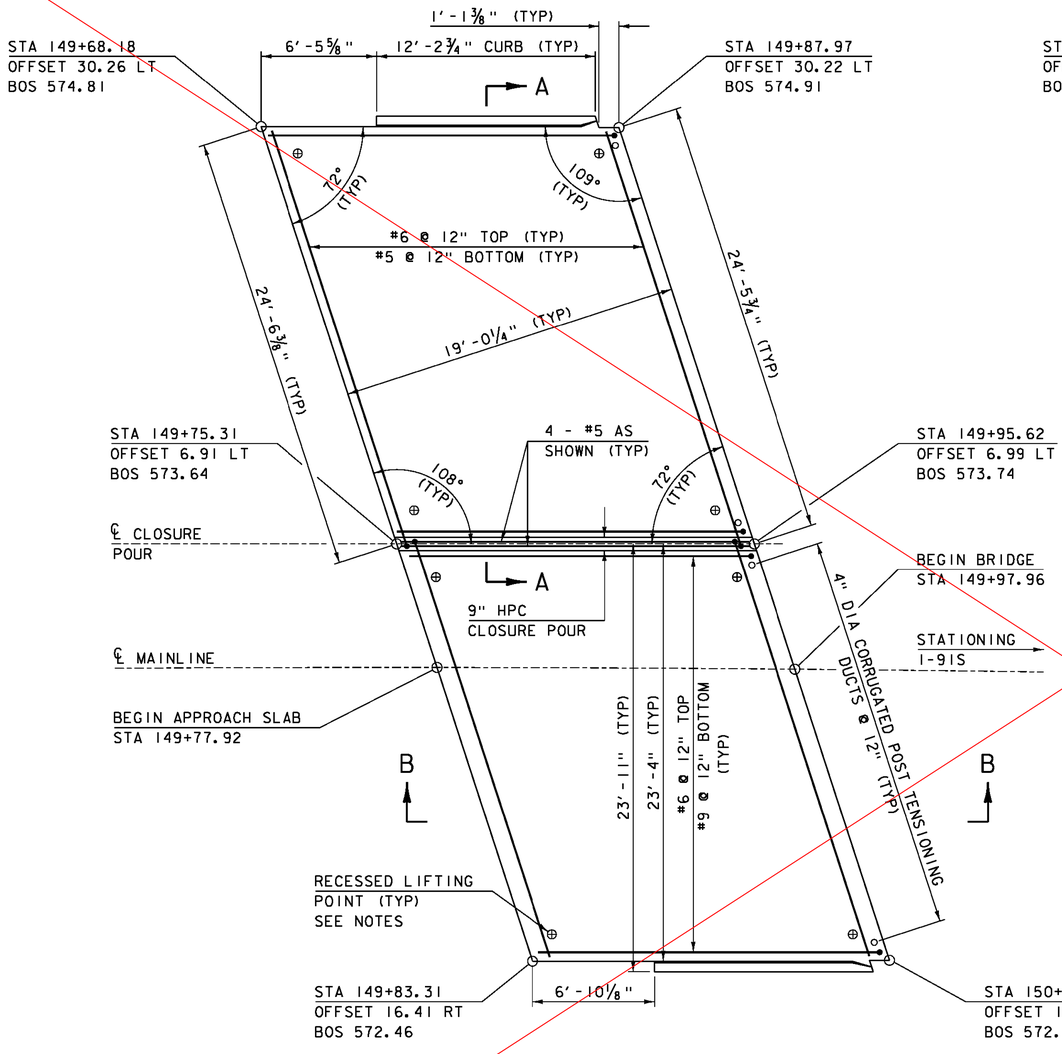


## APPROACH SLAB 1 PLAN

SCALE 1/4" = 1'-0"

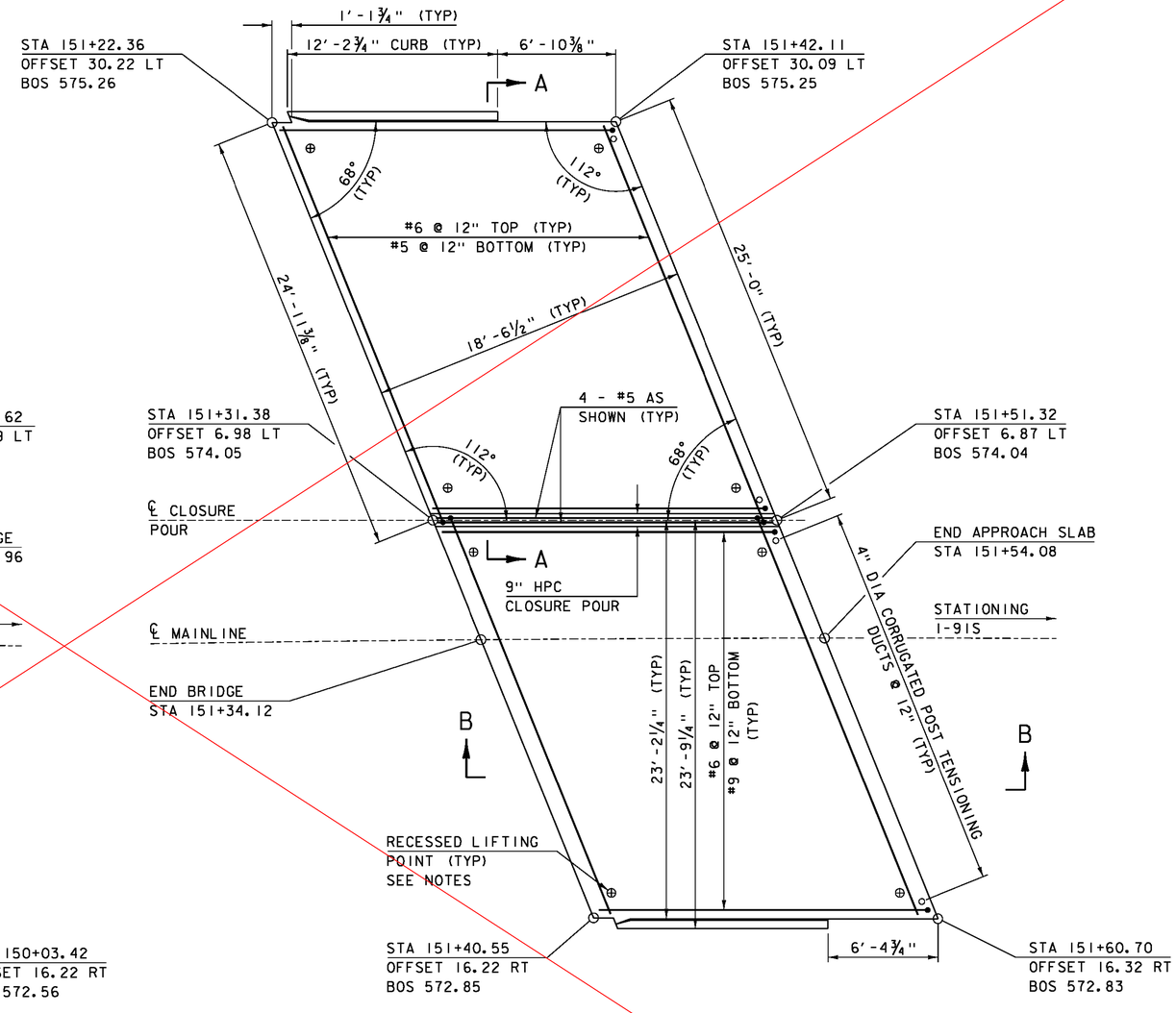


## APPROACH SLAB 2 PLAN

SCALE 1/4" = 1'-0"

NOTES:

1) ALL APPROACH SLAB REINFORCING STEEL SHALL BE LEVEL II OR HIGHER.
2) BOS = BOTTOM OF SLAB
3) LIFTING POINTS SAHLL BE DESIGNED BY OTHERS AND CALCULATIONS INCLUDED WITH SUBMITTAL.

SEE SHEET 97-R

NOTE:

NF = NEAR FACE
FF = FAR FACE
EF = EACH FACE
3" CLEAR, UNLESS OTHERWISE SPECIFIED ON THE PLANS.
2'-2" BAR LAP UNLESS OTHERWISE SPECIFIED ON THE PLANS.

| | |
|---|---|
| PROJECT NAME: | HARTFORD |
| PROJECT NUMBER: | IM 091-2(79) |
| FILE NAME: sl2al32apslabs_43S.dgn | PLOT DATE: 15-DEC-2014 |
| PROJECT LEADER: K. HIGGINS | DRAWN BY: K. FRIEDLAND |
| DESIGNED BY: G. LAROCHE | CHECKED BY: W. LAMMER |
| APPROACH SLAB DETAILS 43S | SHEET 97 OF 166 |

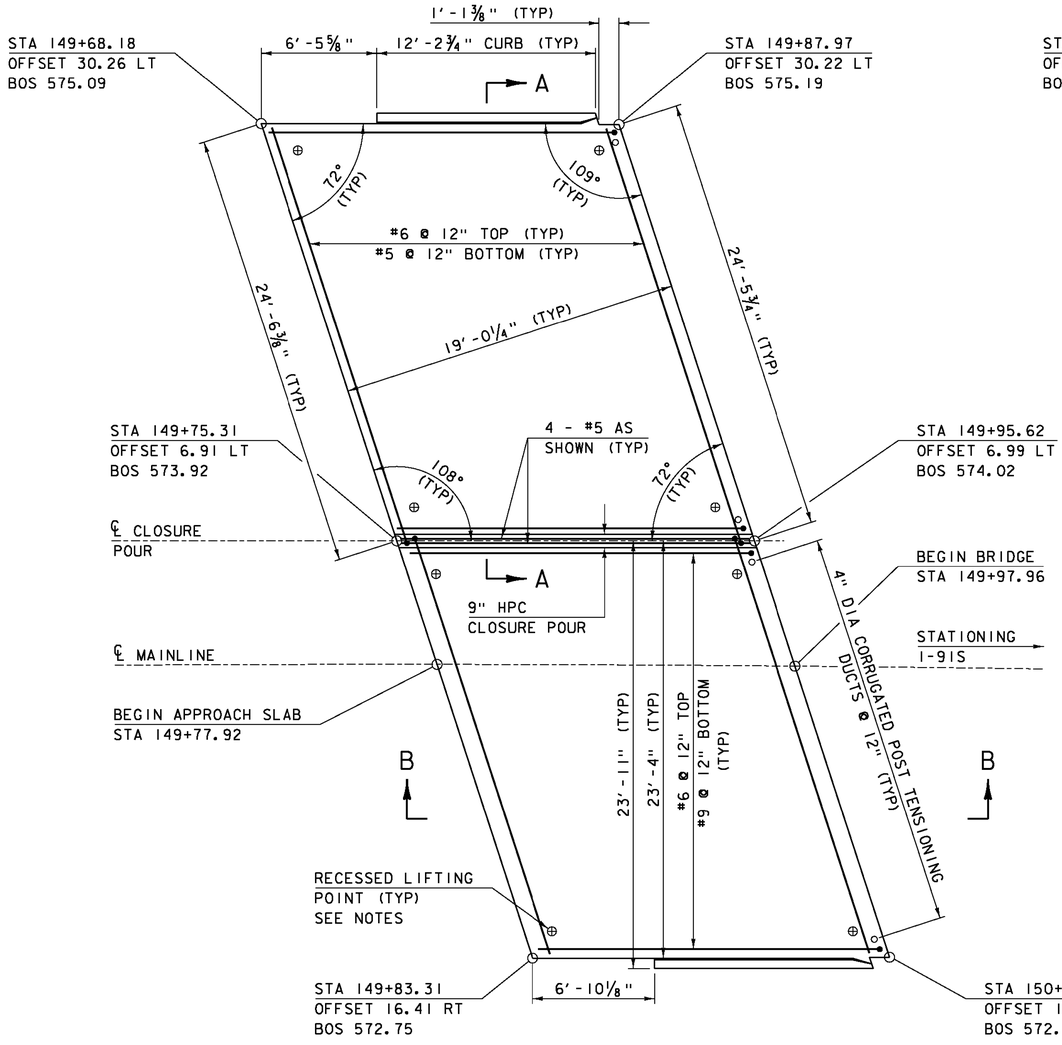


## APPROACH SLAB 1 PLAN

SCALE ¼" = 1'-0"

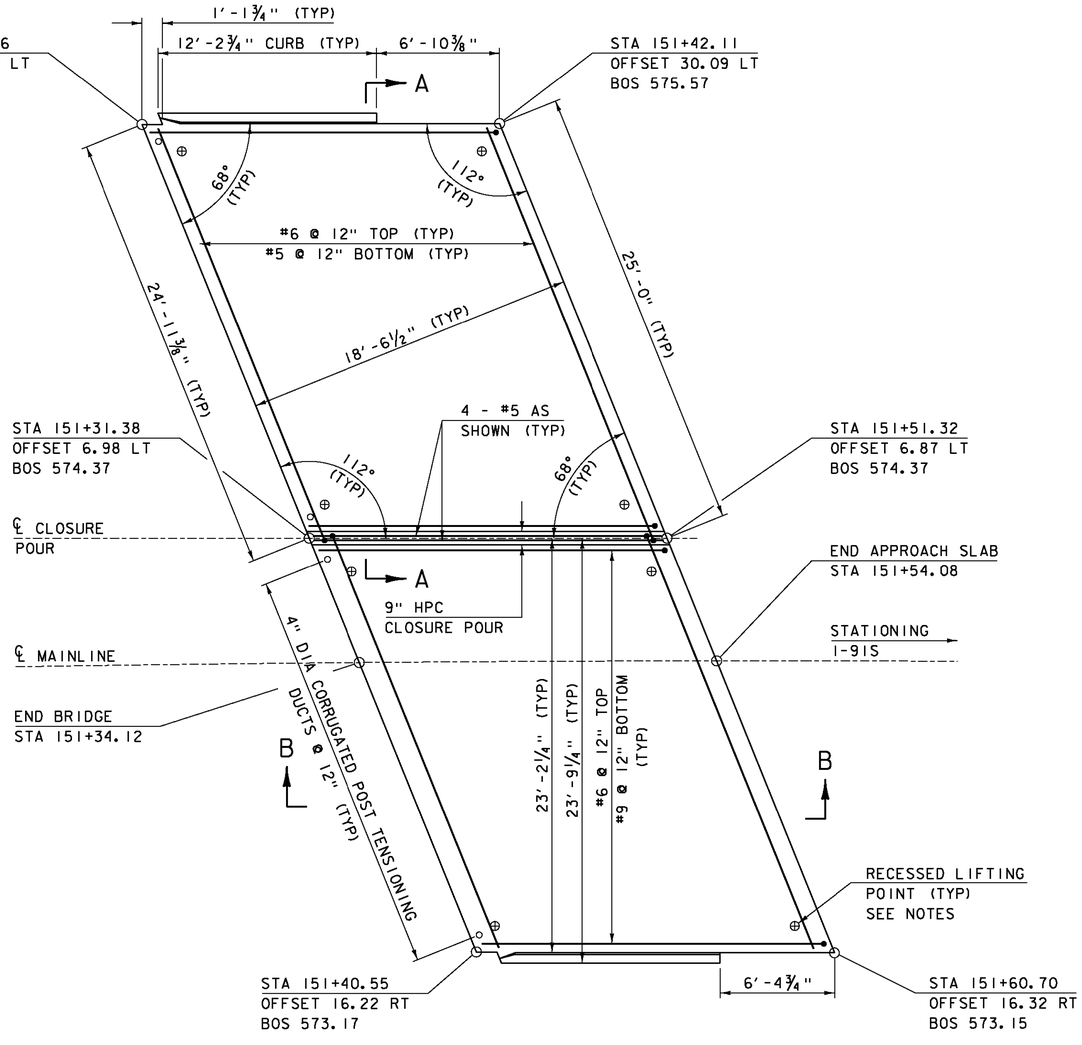


## APPROACH SLAB 2 PLAN

SCALE ¼" = 1'-0"

NOTES:

1) ALL APPROACH SLAB REINFORCING STEEL SHALL BE LEVEL II OR HIGHER.

2) BOS = BOTTOM OF SLAB

3) LIFTING POINTS SAHLL BE DESIGNED BY OTHERS AND CALCULATIONS INCLUDED WITH SUBMITTAL.

**NOTE:**

NF = NEAR FACE
FF = FAR FACE
EF = EACH FACE
3" CLEAR, UNLESS OTHERWISE SPECIFIED ON THE PLANS.
2'-2" BAR LAP UNLESS OTHERWISE SPECIFIED ON THE PLANS.

| REVISION | DATE | DESCRIPTION | BY |
|---|---|---|---|
| 1 | 09-09-2015 | REVISED DUCT LOCATIONS AND LONGITUDINAL REINFORCING | JTS |
| 2 | 09-09-2015 | REVISED BOS ELEVATIONS | JTS |

PROJECT NAME: HARTFORD
PROJECT NUMBER: IM 091-2(79)

FILE NAME: sl2al32apslabs_43S.dgn
PROJECT LEADER: K. HIGGINS
DESIGNED BY: G. LAROCHE
APPROACH SLAB DETAILS 43S

PLOT DATE: 09-SEP-2015
DRAWN BY: K. FRIEDLAND
CHECKED BY: W. LAMMER
SHEET 97R OF 166

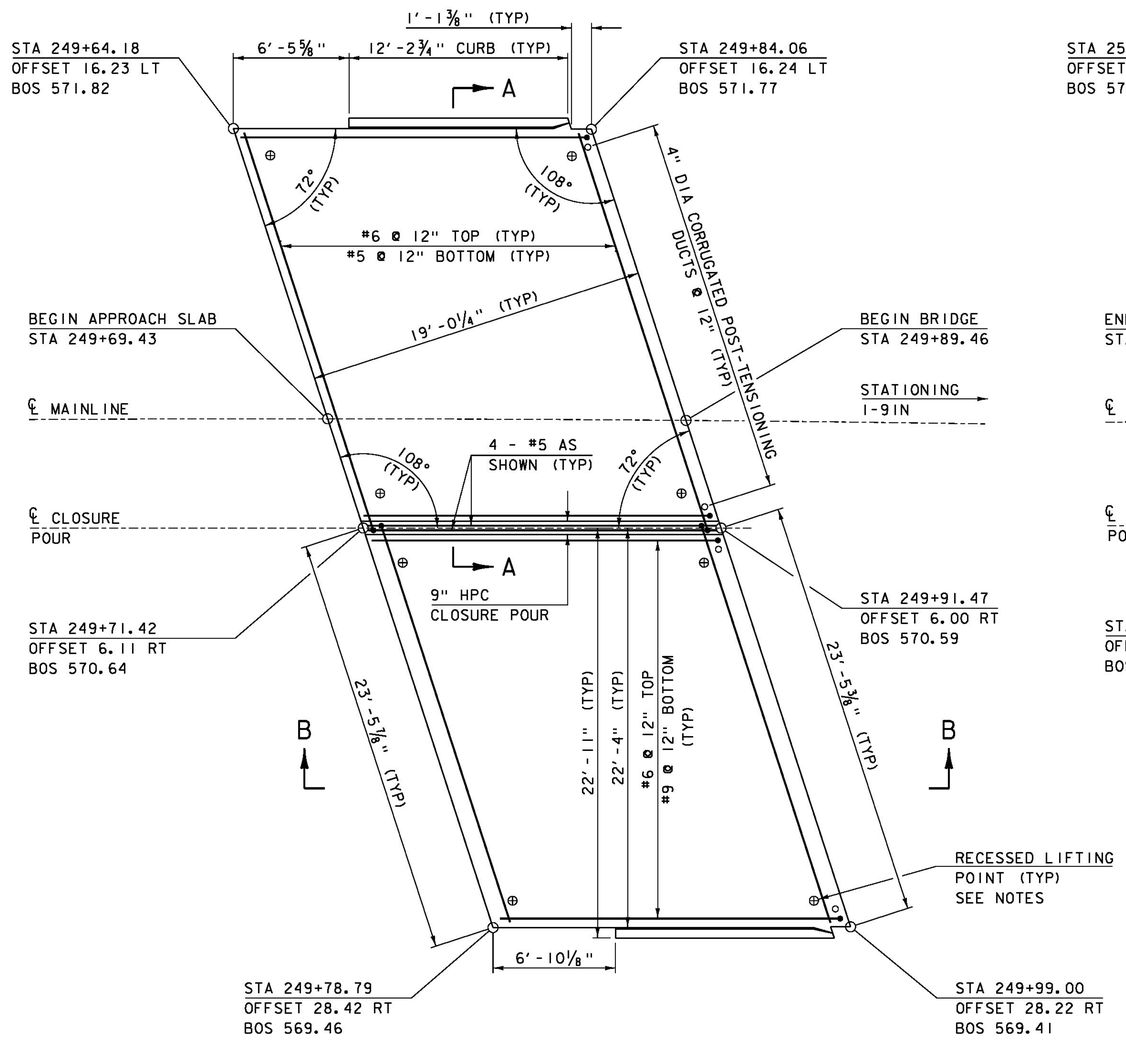


## APPROACH SLAB 3 PLAN

SCALE 1/4" = 1'-0"

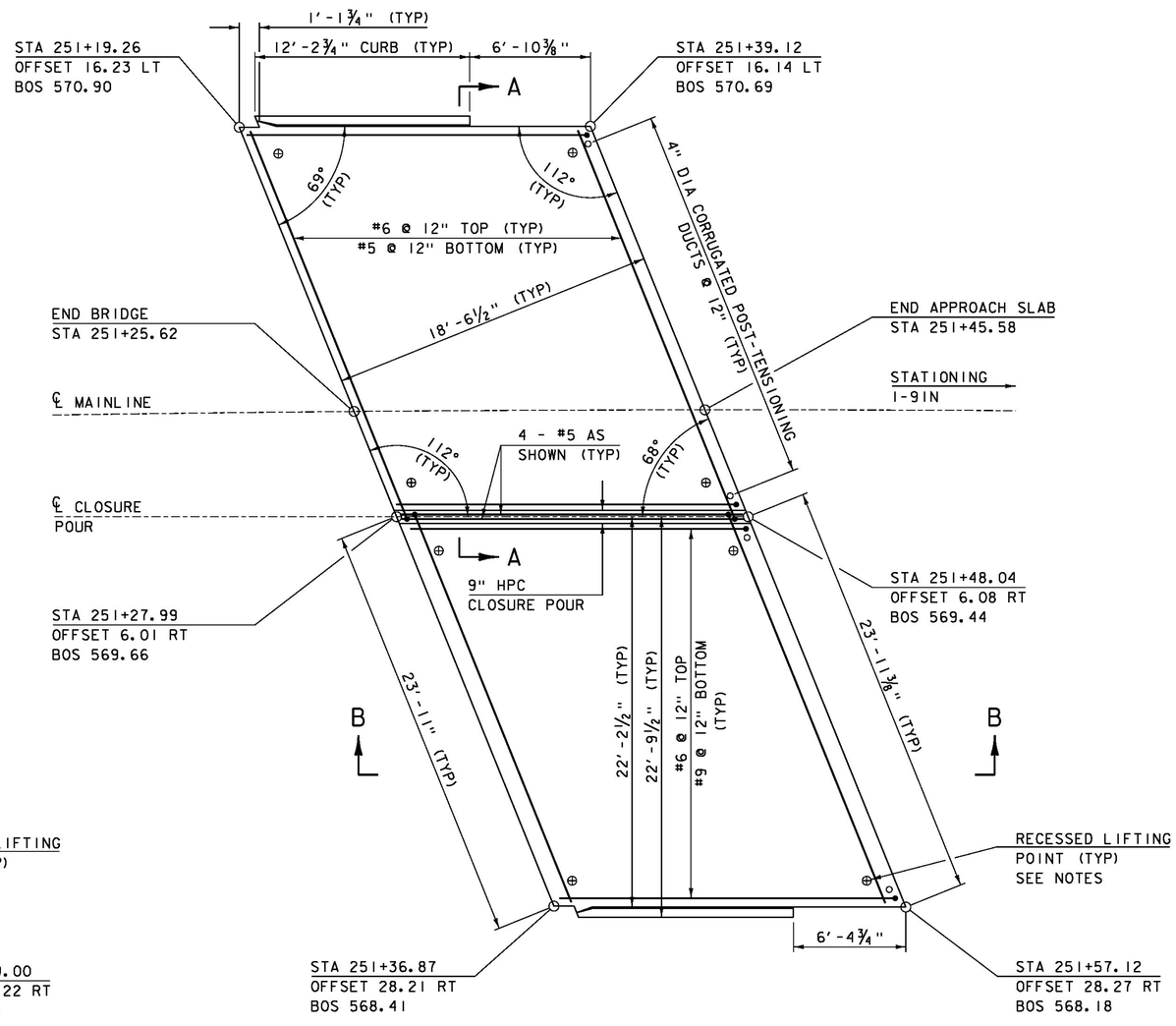


## APPROACH SLAB 4 PLAN

SCALE 1/4" = 1'-0"

NOTES:

1) ALL APPROACH SLAB REINFORCING STEEL SHALL BE LEVEL II OR HIGHER.

2) BOS = BOTTOM OF SLAB

3) LIFTING POINTS SAHLL BE DESIGNED BY OTHERS AND CALCULATIONS INCLUDED WITH SUBMITTAL.

NOTE:

NF = NEAR FACE
FF = FAR FACE
EF = EACH FACE
3" CLEAR, UNLESS OTHERWISE SPECIFIED ON THE PLANS.
2'-2" BAR LAP UNLESS OTHERWISE SPECIFIED ON THE PLANS.

PROJECT NAME: HARTFORD
PROJECT NUMBER: IM 091-2(79)

FILE NAME: sl2al32apslabs_43N.dgn
PROJECT LEADER: K. HIGGINS
DESIGNED BY: G. LAROCHE
APPROACH SLAB DETAILS 43N

PLOT DATE: 15-DEC-2014
DRAWN BY: K. FRIEDLAND
CHECKED BY: W. LAMMER
SHEET 98 OF 166

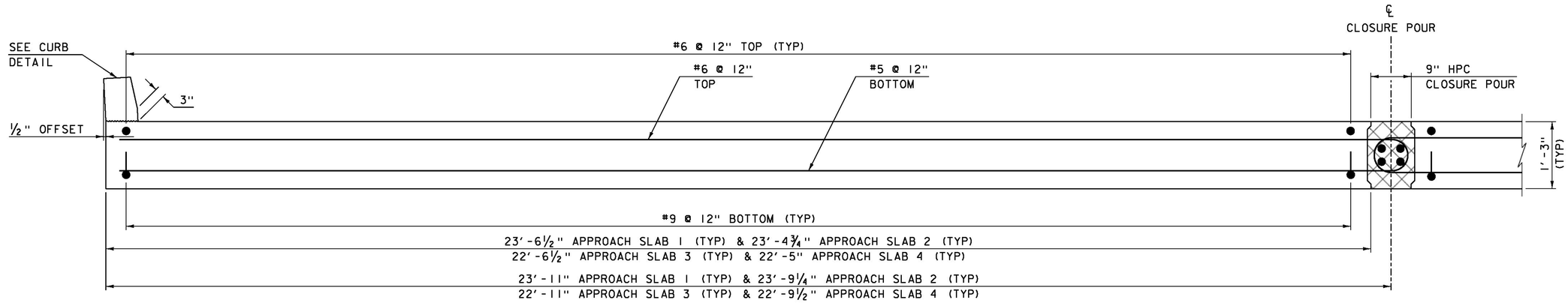


## SECTION A-A

SCALE 1" = 1'-0"

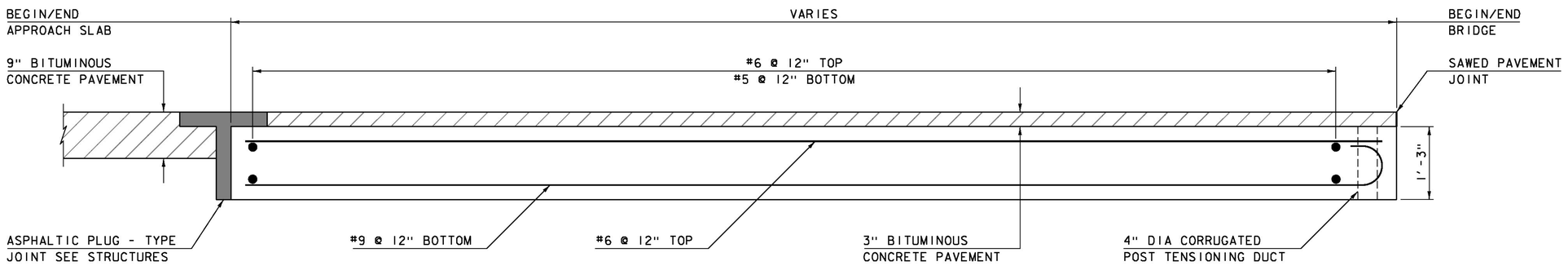


## SECTION B-B

SCALE 1" = 1'-0"

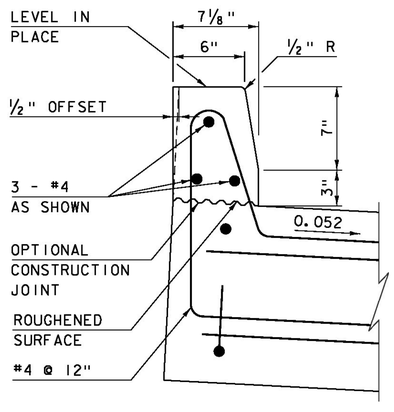


## CURB DETAIL

SCALE 2" = 1'-0"

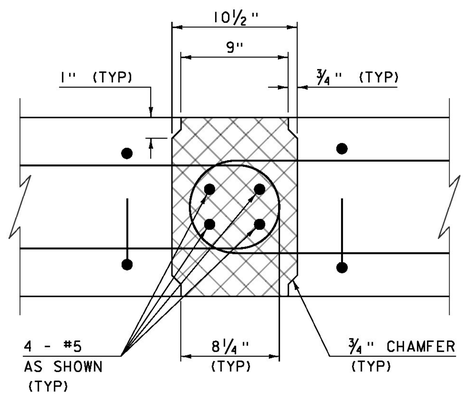


## JOINT DETAIL SECTION

SCALE 2" = 1'-0"

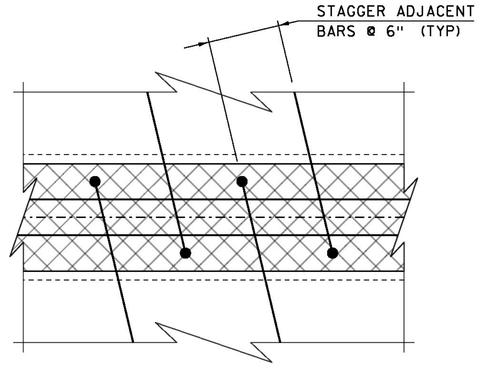


## JOINT DETAIL PLAN

SCALE 2" = 1'-0"

**NOTE:**

NF = NEAR FACE
FF = FAR FACE
EF = EACH FACE
▲ = CUT TO FIT IN FIELD
3" CLEAR, UNLESS OTHERWISE SPECIFIED ON THE PLANS.
2'-2" BAR LAP UNLESS OTHERWISE SPECIFIED ON THE PLANS.

NOTES:

1) ALL APPROACH SLAB REINFORCING STEEL SHALL BE LEVEL II OR HIGHER.

PROJECT NAME: HARTFORD
PROJECT NUMBER: IM 091-2(79)

FILE NAME: sl2al32apslabs_43S.dgn
PROJECT LEADER: K. HIGGINS
DESIGNED BY: G. LAROCHE
APPROACH SLAB DETAILS

PLOT DATE: 15-DEC-2014
DRAWN BY: K. FRIEDLAND
CHECKED BY: W. LAMMER
SHEET 99 OF 166

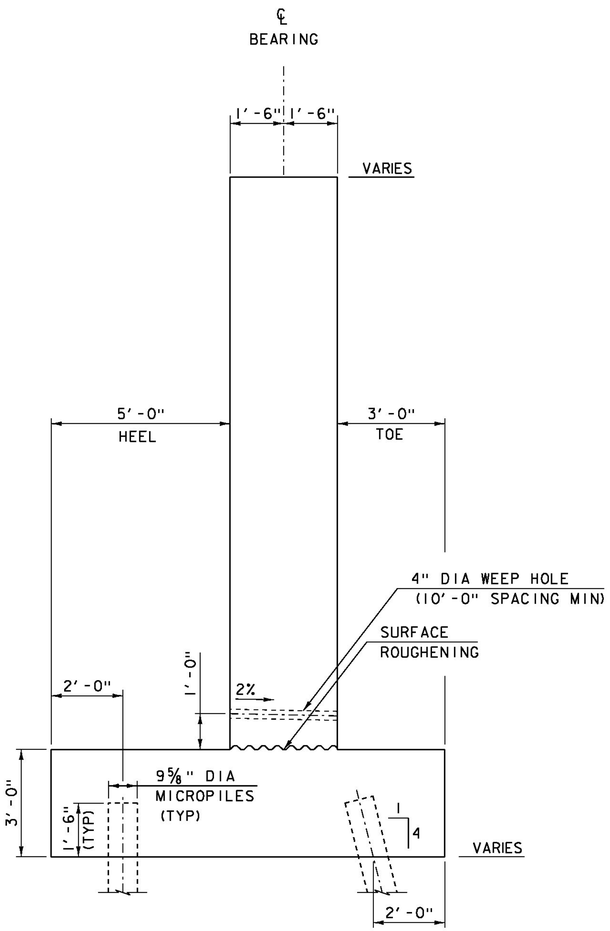


## ABUTMENT 1-3 TYPICAL

SCALE ½"=1'-0"

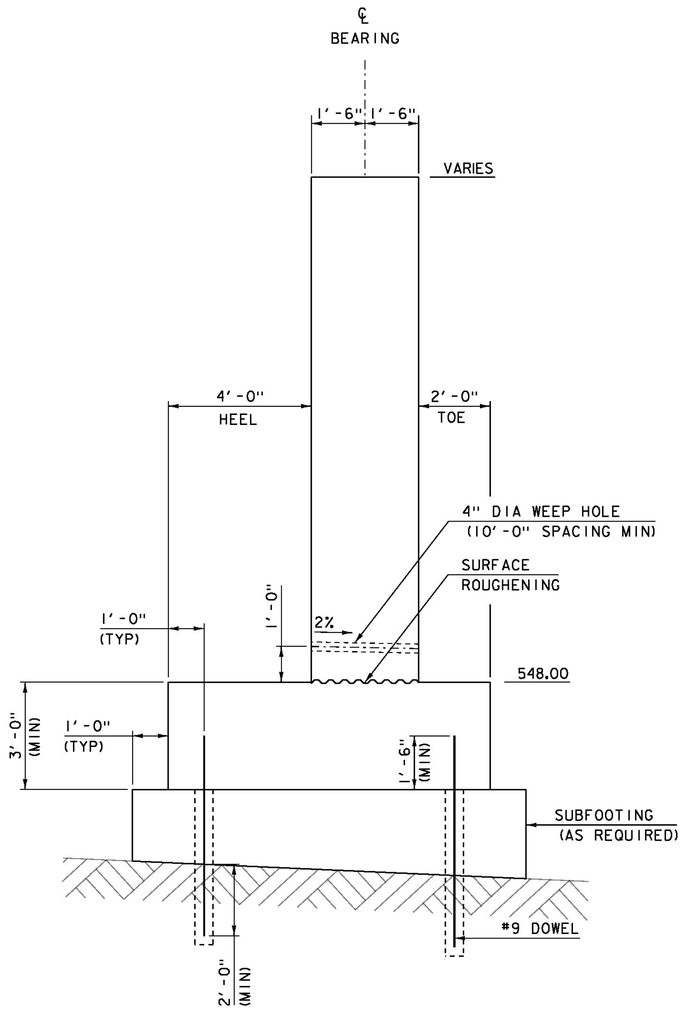


## ABUTMENT 4 TYPICAL

SCALE ½"=1'-0"

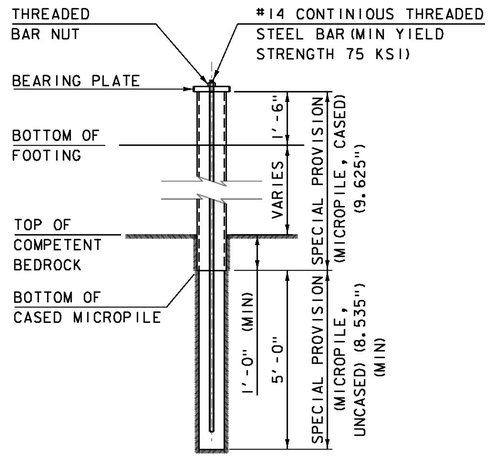


## PLUMB MICROPILE ELEVATION

SCALE: ½" = 1'-0"

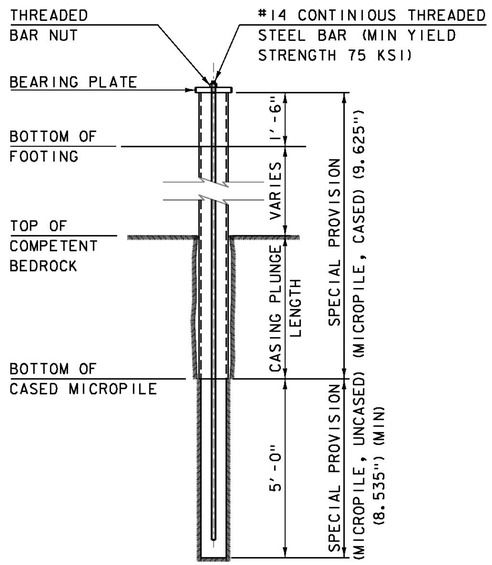


## BATTERED MICROPILE ELEVATION

SCALE: ½" = 1'-0"

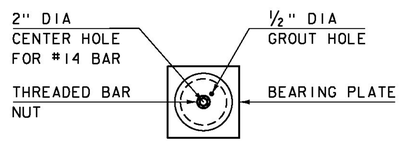


## MICROPILE PLAN

SCALE: 1" = 1'-0"

| | PILE TYPE | CASING PLUNGE LENGTH IN COMPETENT ROCK | CASING SEATED INTO COMPETENT ROCK | BEARING PLATE SIZE |
|---|---|---|---|---|
| ABUT 1 | FRONT ROW (BATTERED) | 3.0 FT | N/A | 1¾" X 1' X 1' |
| | BACK ROW (PLUMB) | N/A | 1 FT | |
| ABUT 2 | FRONT ROW (BATTERED) | 4.5 FT | N/A | 1¾" X 1'1" X 1'1" |
| | BACK ROW (PLUMB) | N/A | 1 FT | |
| ABUT 3 | FRONT ROW (BATTERED) | 4.0 FT | N/A | 1¾" X 1' X 1' |
| | BACK ROW (PLUMB) | N/A | 1 FT | |

PROJECT NAME: HARTFORD
PROJECT NUMBER: IM 091-2(79)

FILE NAME: s12a132sub_abl.dgn
PROJECT LEADER: K. HIGGINS
DESIGNED BY: G. LAROCHE
ABUTMENT TYPICALS

PLOT DATE: 15-DEC-2014
DRAWN BY: J. SALVATORI
CHECKED BY: W. LAMMER
SHEET 100 OF 166

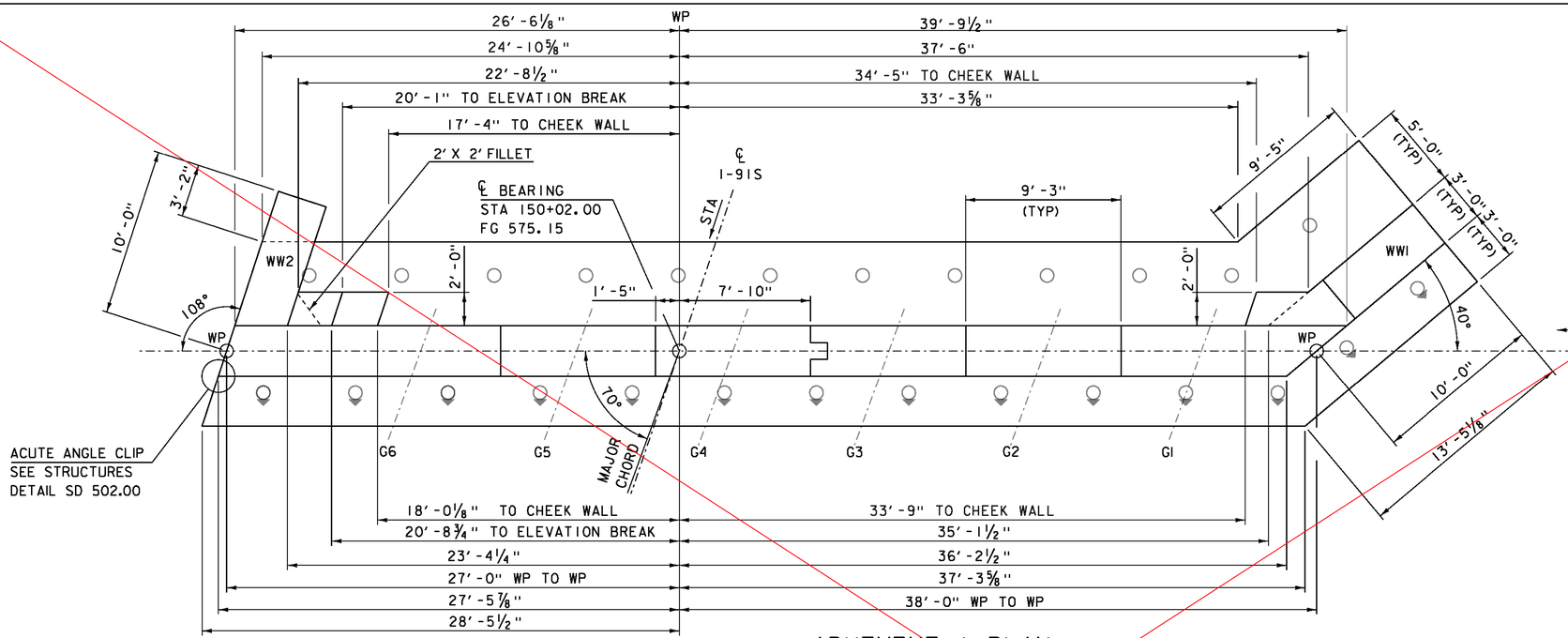


## ABUTMENT 1 PLAN

SCALE: 1/4" = 1'-0"

## BRIDGE SEAT ELEVATIONS

| GIRDER | ELEVATION |
|---|---|
| G1 | 570.81 |
| G2 | 570.37 |
| G3 | 569.92 |
| G4 | 569.47 |
| G5 | 569.03 |
| G6 | 568.58 |

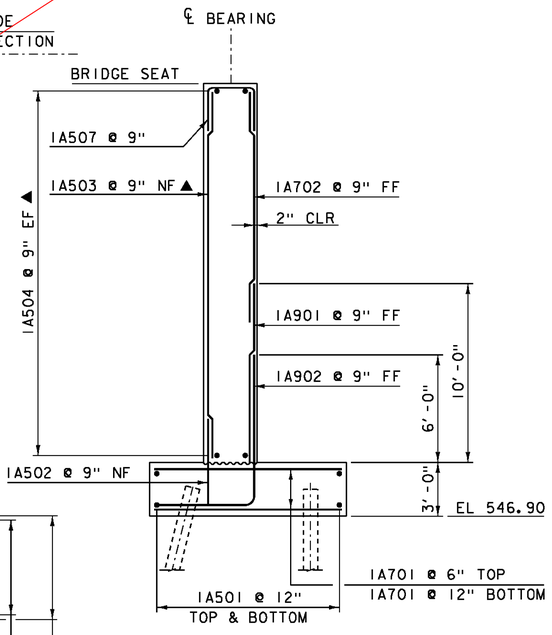


## ABUTMENT 1 REINFORCING AT BRIDGE SEAT

SCALE: 1/4" = 1'-0"

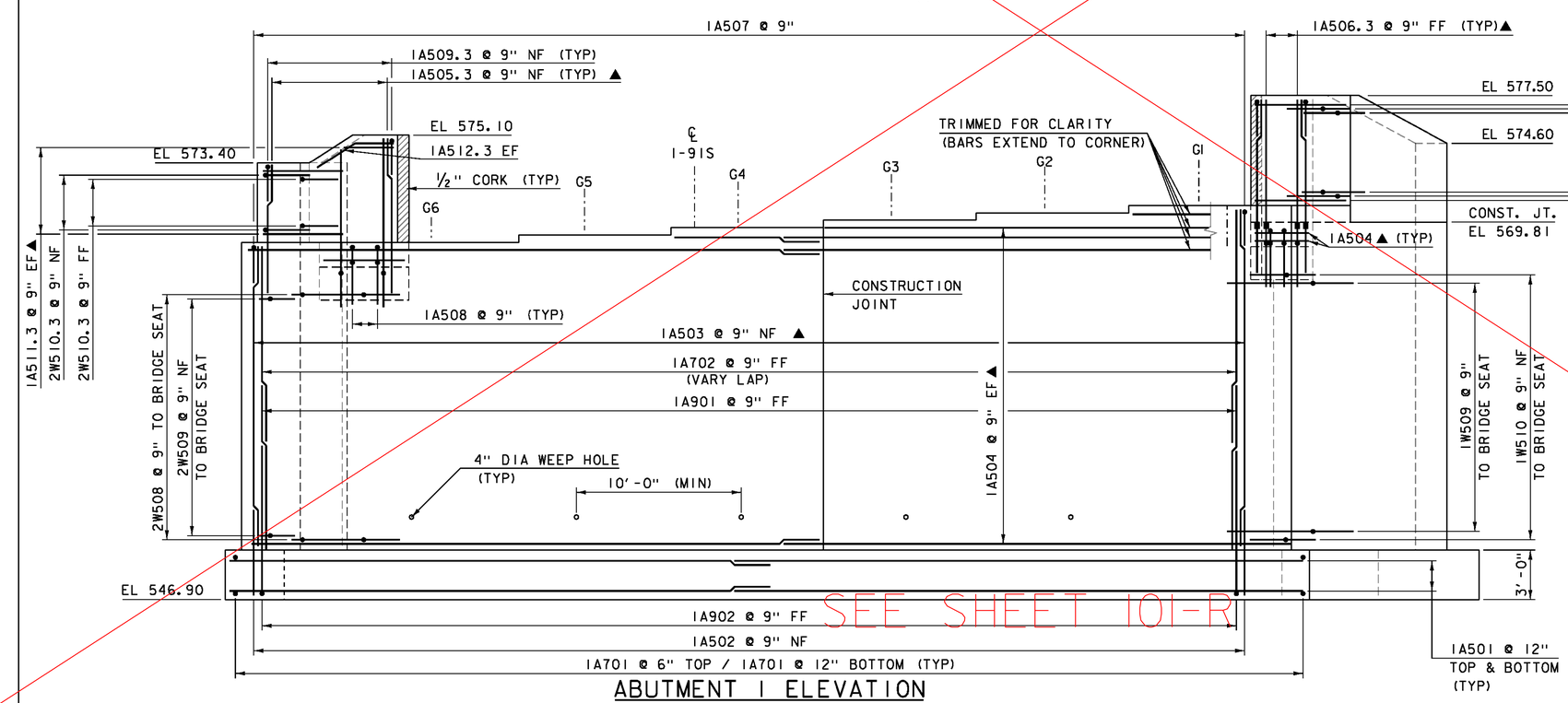


SEE SHEET 101-R

## ABUTMENT 1 ELEVATION

SCALE: 1/4" = 1'-0"

### NOTE:

NF = NEAR FACE
FF = FAR FACE
EF = EACH FACE
▲ = CUT TO FIT IN FIELD
▬ = MECHANICAL CONNECTOR
3" CLEAR, UNLESS OTHERWISE SPECIFIED ON THE PLANS.
2'-2" LAP FOR #5 BAR
2'-7" LAP FOR #6 BAR
3'-5" LAP FOR #7 BAR
4'-6" LAP FOR #8 BAR

PROJECT NAME: HARFORD
PROJECT NUMBER: IM 091-2(79)

FILE NAME: sl2al32sub_abl.dgn
PROJECT LEADER: K. HIGGINS
DESIGNED BY: G. LAROCHE
ABUTMENT 1

PLOT DATE: 15-DEC-2014
DRAWN BY: J. SALVATORI
CHECKED BY: G. LAROCHE
SHEET 101 OF 166

## BRIDGE SEAT ELEVATIONS

| GIRDER | ELEVATION |
|---|---|
| GI | 570.81 |
| G2 | 570.37 |
| G3 | 569.92 |
| G4 | 569.47 |
| G5 | 569.03 |
| G6 | 568.58 |

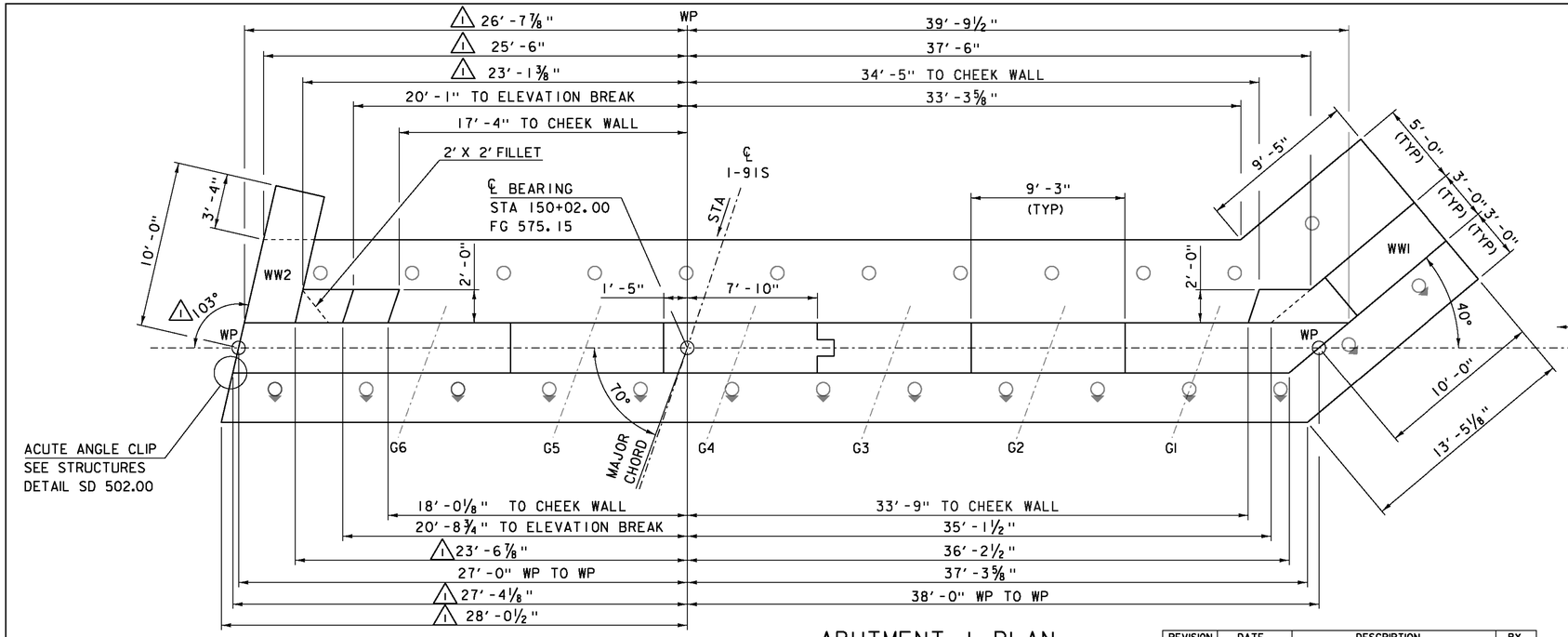


## ABUTMENT I PLAN

SCALE: 1/4" = 1'-0"

| REVISION | DATE | DESCRIPTION | BY |
|---|---|---|---|
| 1 | 04-23-2015 | WINGWALL 2 ROTATED 5 DEGREES | JS |

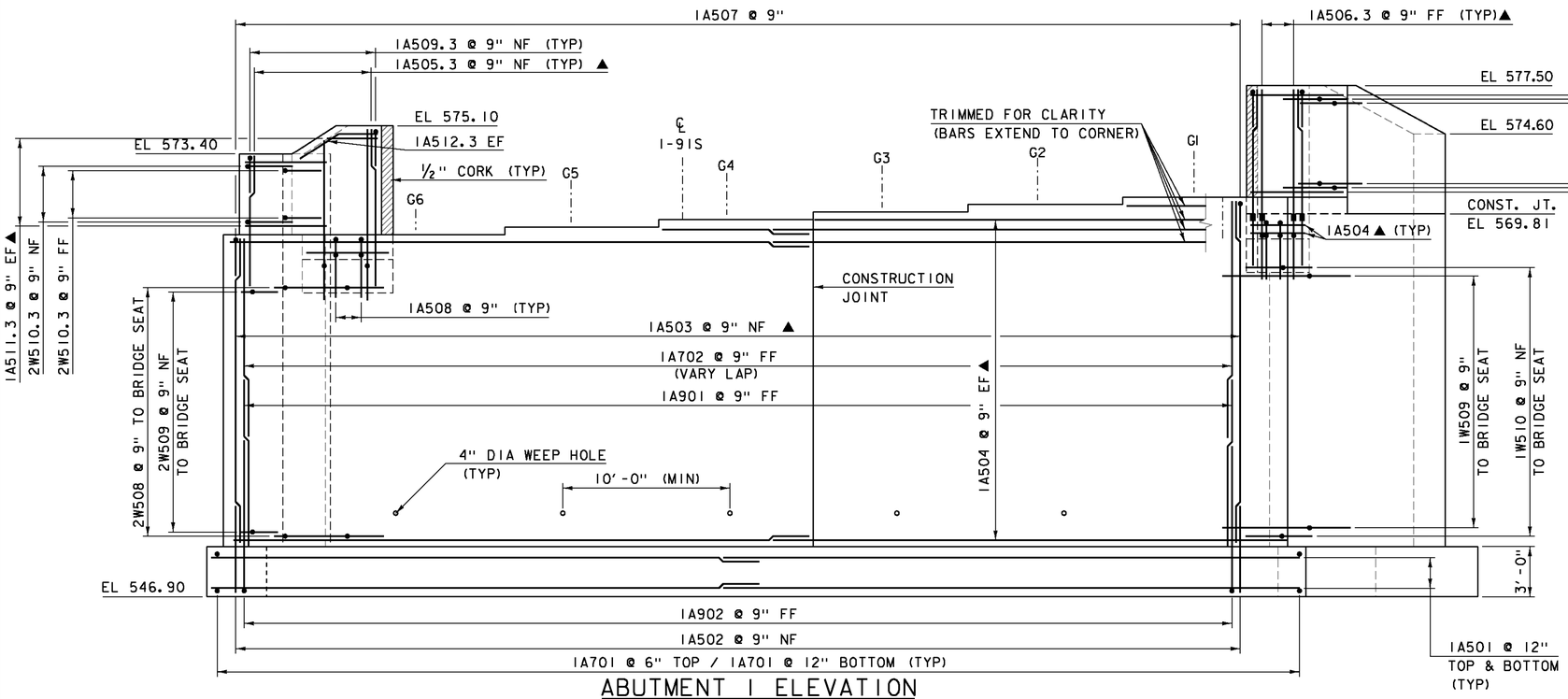


## ABUTMENT I ELEVATION

SCALE: 1/4" = 1'-0"

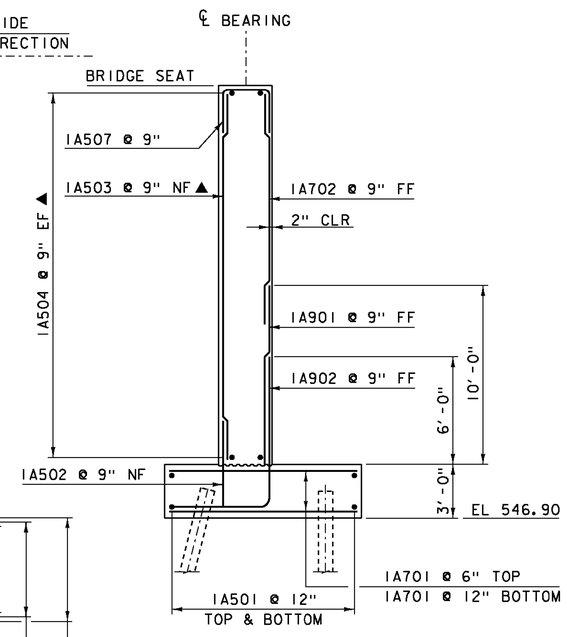


## ABUTMENT I REINFORCING AT BRIDGE SEAT

SCALE: 1/4" = 1'-0"

### NOTE:

NF = NEAR FACE
FF = FAR FACE
EF = EACH FACE
▲ = CUT TO FIT IN FIELD
▬ = MECHANICAL CONNECTOR
3" CLEAR, UNLESS OTHERWISE SPECIFIED ON THE PLANS.
2'-2" LAP FOR #5 BAR
2'-7" LAP FOR #6 BAR
3'-5" LAP FOR #7 BAR
4'-6" LAP FOR #8 BAR

PROJECT NAME: HARFORD
PROJECT NUMBER: IM 091-2(79)

FILE NAME: sl2al32sub_abl.dgn
PROJECT LEADER: K. HIGGINS
DESIGNED BY: G. LAROCHE
ABUTMENT I

PLOT DATE: 23-APR-2015
DRAWN BY: J. SALVATORI
CHECKED BY: G. LAROCHE
SHEET 101R OF 166

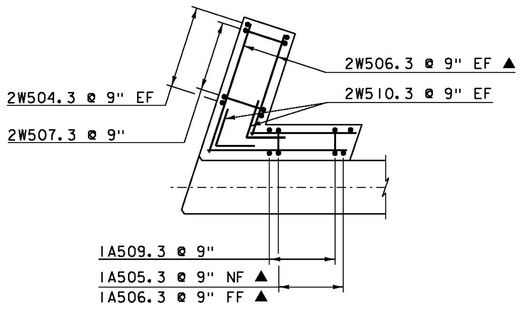


## WINGWALL 2 CORNER DETAIL ABOVE BRIDGE SEAT

SCALE: 1/4" = 1'-0"

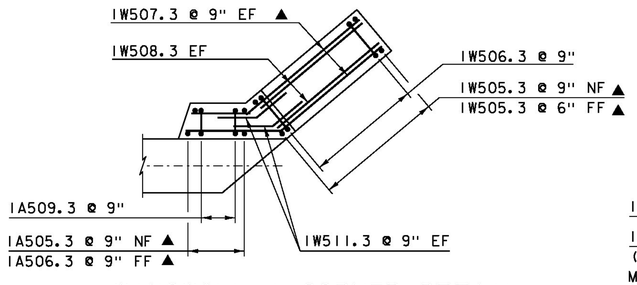


## WINGWALL 1 CORNER DETAIL ABOVE BRIDGE SEAT

SCALE: 1/4" = 1'-0"

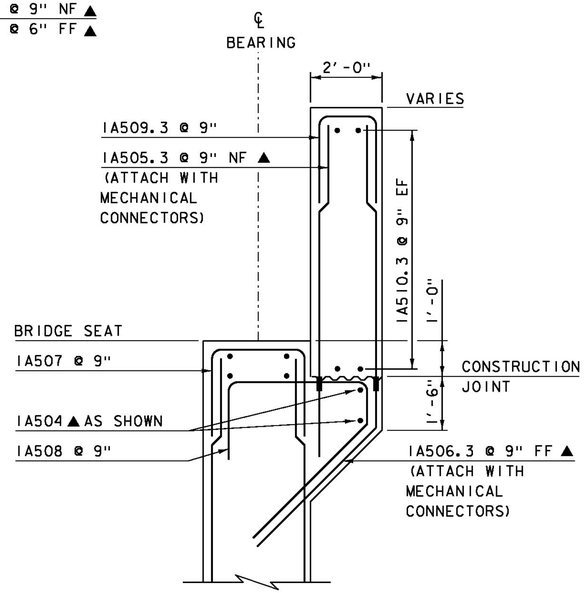


## ABUTMENT 1 CHEEK WALL REINFORCING @ WW 2

SCALE: 1/4" = 1'-0"

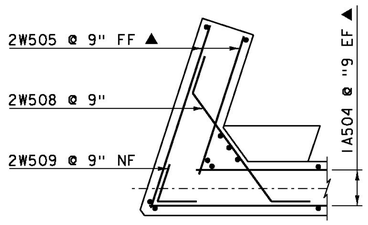


## WINGWALL 2 CORNER DETAIL BELOW BRIDGE SEAT

SCALE: 1/4" = 1'-0"

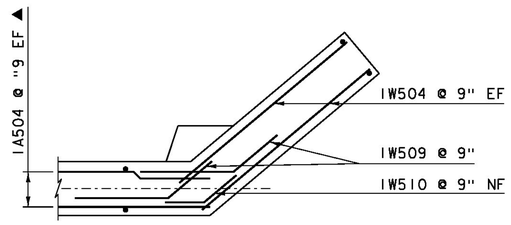


## WINGWALL 1 CORNER DETAIL BELOW BRIDGE SEAT

SCALE: 1/4" = 1'-0"

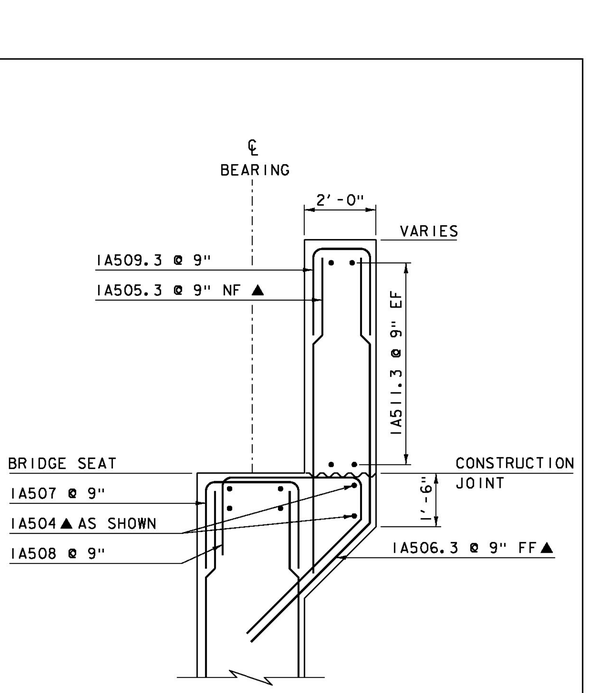


## ABUTMENT 1 CHEEK WALL REINFORCING @ WW 1

SCALE: 1/2" = 1'-0"

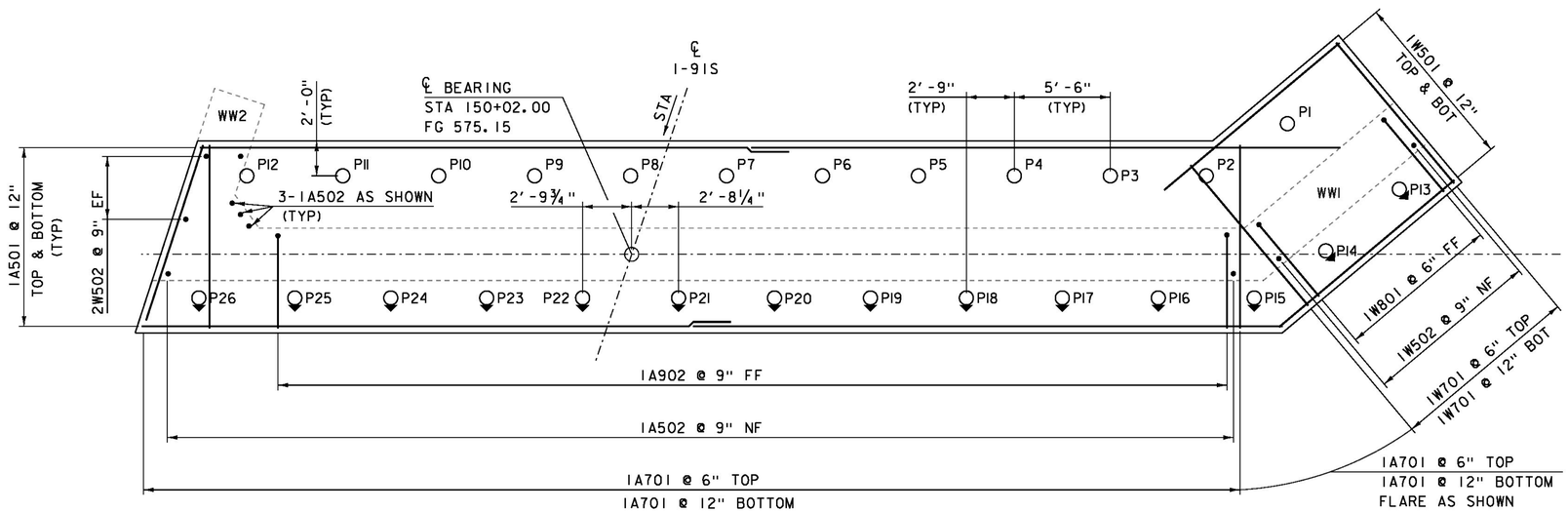


## ABUTMENT 1 FOOTING PLAN

SCALE: 1/4" = 1'-0"

### NOTE:

NF = NEAR FACE
FF = FAR FACE
EF = EACH FACE
▲ = CUT TO FIT IN FIELD
▬ = MECHANICAL CONNECTOR
3" CLEAR, UNLESS OTHERWISE SPECIFIED ON THE PLANS.
2'-2" LAP FOR #5 BAR
2'-7" LAP FOR #6 BAR
3'-5" LAP FOR #7 BAR
4'-6" LAP FOR #8 BAR

PROJECT NAME: HARFORD
PROJECT NUMBER: IM 091-2(79)

FILE NAME: s12a132sub_ab1.dgn
PROJECT LEADER: K. HIGGINS
DESIGNED BY: G. LAROCHE
ABUTMENT 1 FOOTING

PLOT DATE: 15-DEC-2014
DRAWN BY: J. SALVATORI
CHECKED BY: G. LAROCHE
SHEET 102 OF 166

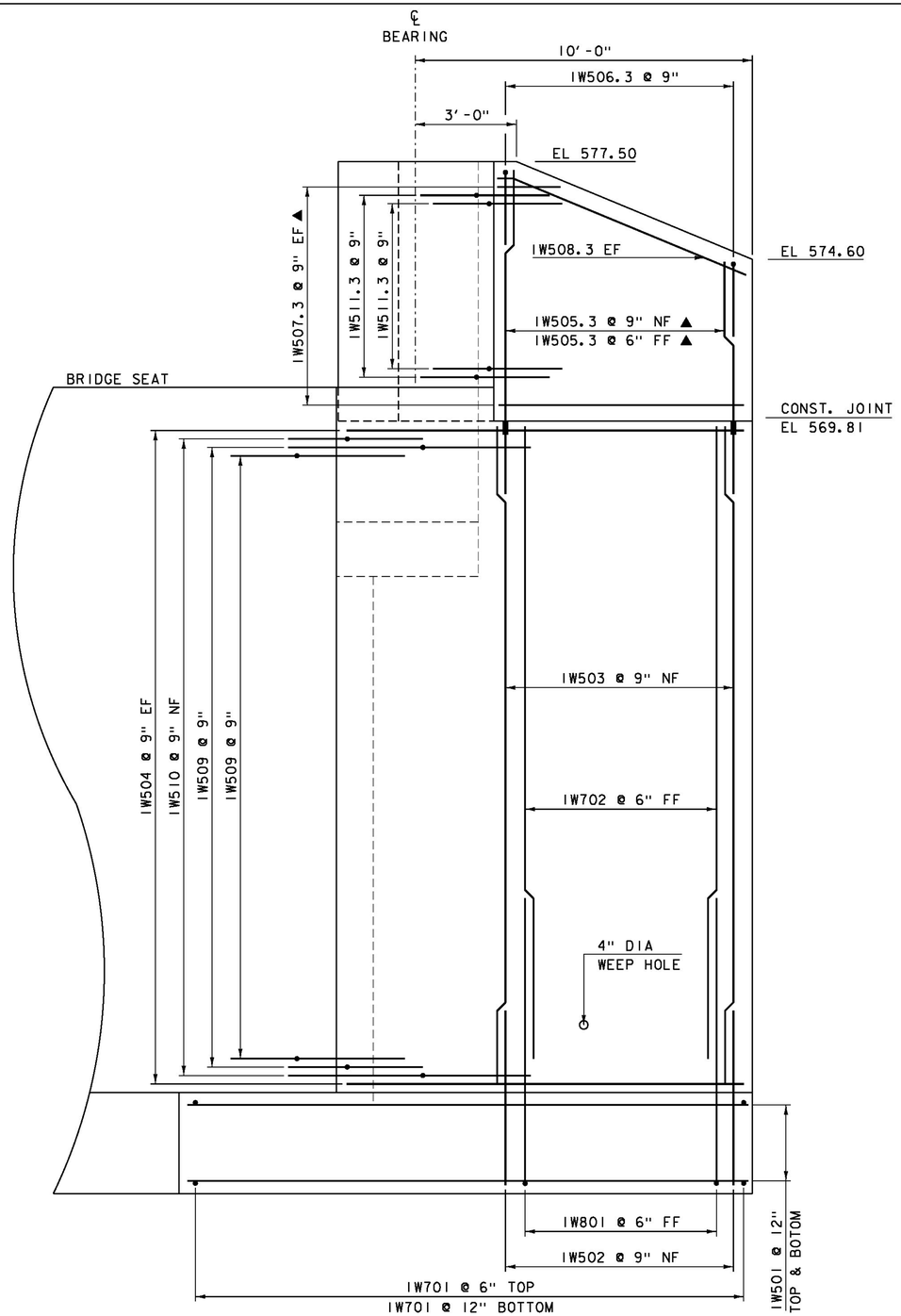


## WINGWALL 1 ELEVATION

SCALE: ½" = 1'-0"

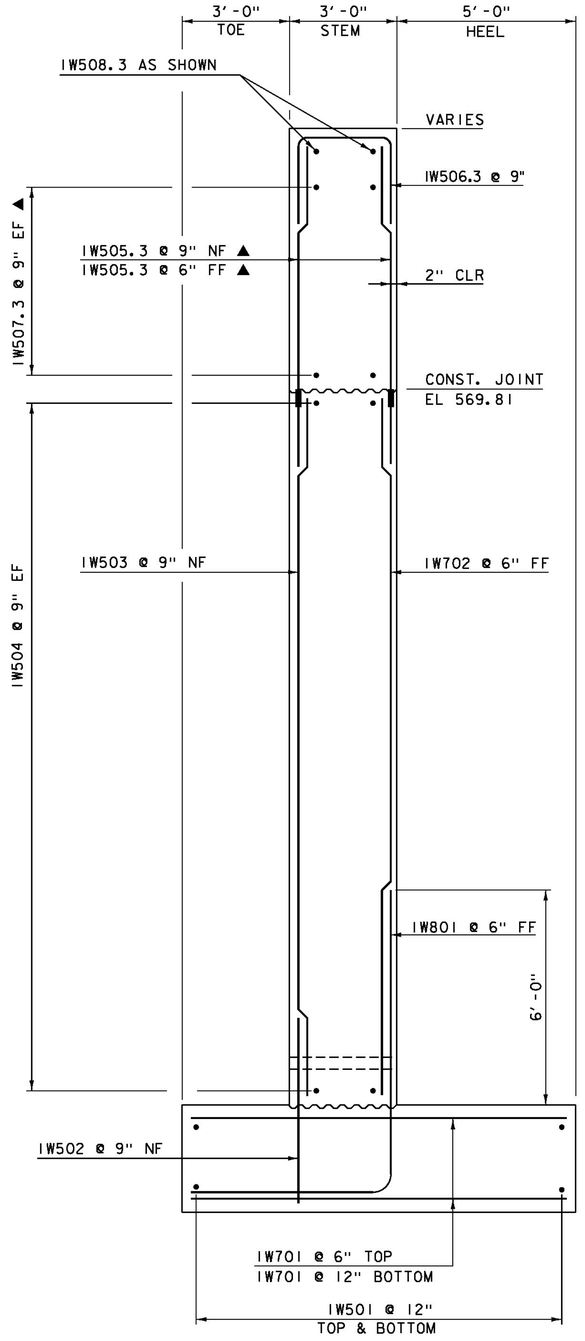


## WINGWALL 1 TYPICAL

SCALE: ½" = 1'-0"

NOTE:

NF = NEAR FACE
FF = FAR FACE
EF = EACH FACE
▲ = CUT TO FIT IN FIELD
▬ = MECHANICAL CONNECTOR
3" CLEAR, UNLESS OTHERWISE SPECIFIED ON THE PLANS.
2'-2" LAP FOR #5 BAR
2'-7" LAP FOR #6 BAR
3'-5" LAP FOR #7 BAR
4'-6" LAP FOR #8 BAR

| | |
|---|---|
| PROJECT NAME: | HARTFORD |
| PROJECT NUMBER: | IM 091-2(79) |
| FILE NAME: s12a132sub_abl.dgn | PLOT DATE: 15-DEC-2014 |
| PROJECT LEADER: K. HIGGINS | DRAWN BY: J. SALVATORI |
| DESIGNED BY: G. LAROCHE | CHECKED BY: G. LAROCHE |
| WINGWALL 1 DETAILS | SHEET 103 OF 166 |

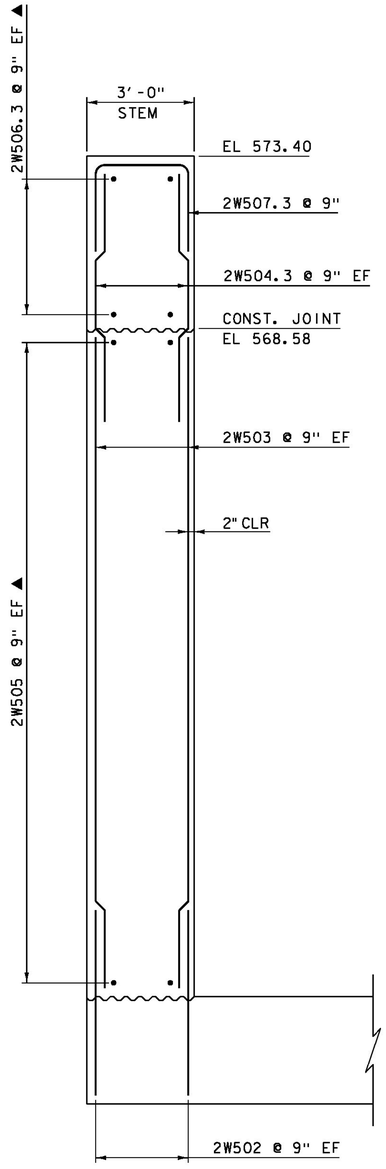


## WINGWALL 2 TYPICAL

SCALE: ½" = 1'-0"

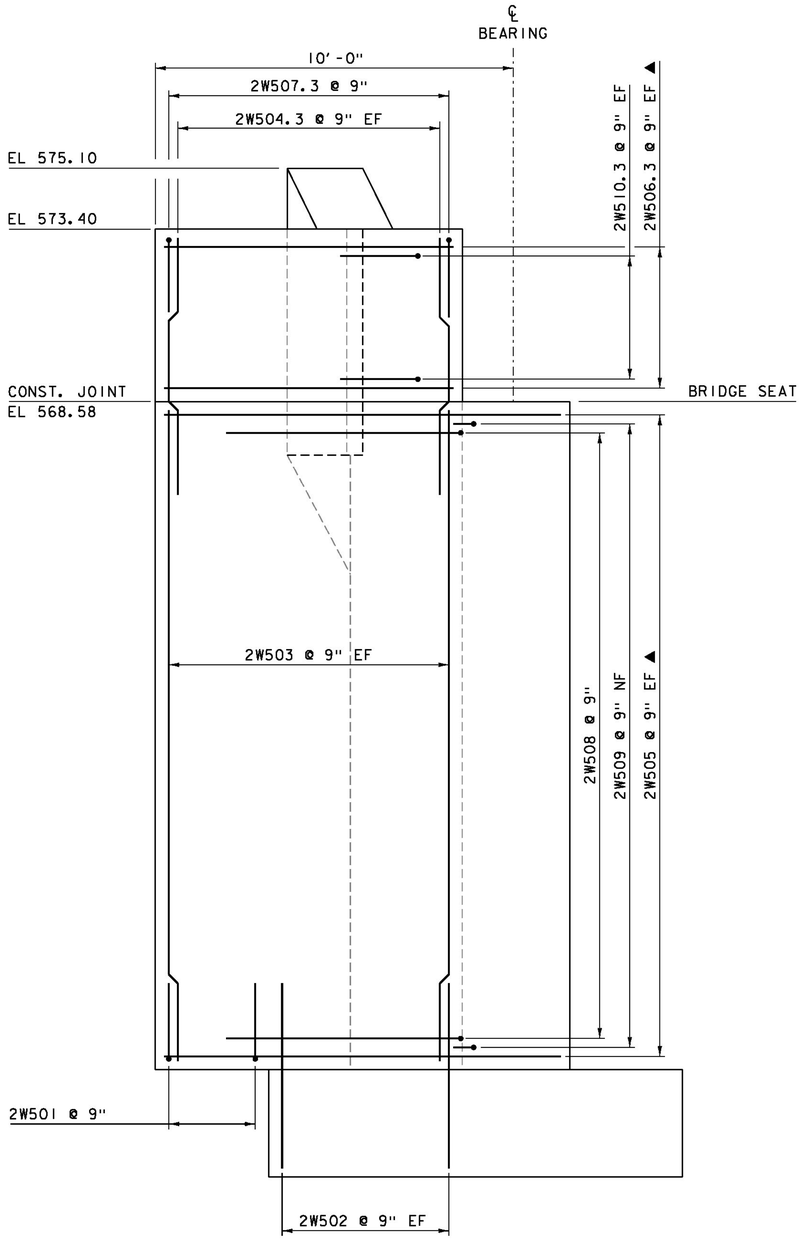


## WINGWALL 2 ELEVATION

SCALE: ½" = 1'-0"

NOTE:

NF = NEAR FACE
FF = FAR FACE
EF = EACH FACE
▲ = CUT TO FIT IN FIELD
▬ = MECHANICAL CONNECTOR
3" CLEAR, UNLESS OTHERWISE SPECIFIED ON THE PLANS.
2'-2" LAP FOR #5 BAR
2'-7" LAP FOR #6 BAR
3'-5" LAP FOR #7 BAR
4'-6" LAP FOR #8 BAR

| | |
|---|---|
| PROJECT NAME: | HARTFORD |
| PROJECT NUMBER: | IM 091-2(79) |
| FILE NAME: sl2al32sub_abl.dgn | PLOT DATE: 15-DEC-2014 |
| PROJECT LEADER: K. HIGGINS | DRAWN BY: J. SALVATORI |
| DESIGNED BY: G. LAROCHE | CHECKED BY: G. LAROCHE |
| WINGWALL 2 DETAILS | SHEET 104 OF 166 |

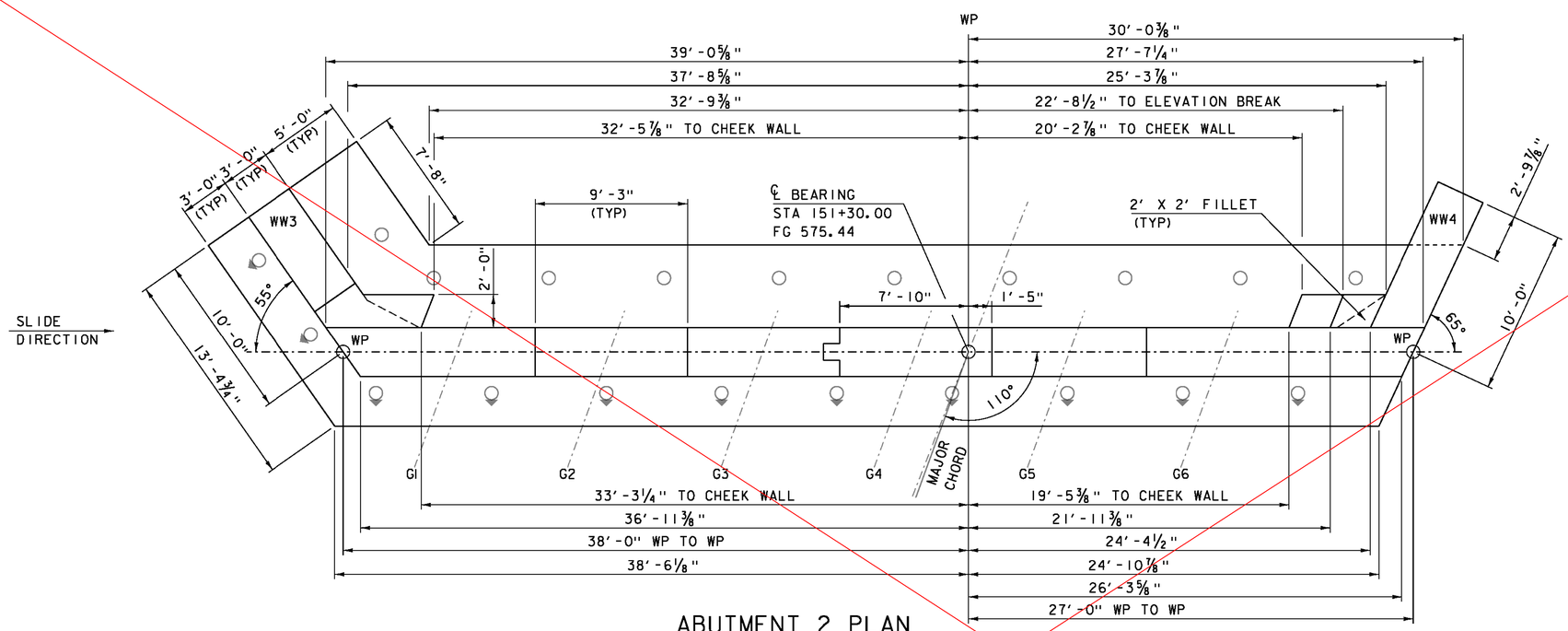


## ABUTMENT 2 PLAN

SCALE: 1/4″ = 1′-0″

## BRIDGE SEAT ELEVATIONS

| GIRDER | ELEVATION |
|---|---|
| G1 | 571.11 |
| G2 | 570.66 |
| G3 | 570.22 |
| G4 | 569.77 |
| G5 | 569.32 |
| G6 | 568.87 |

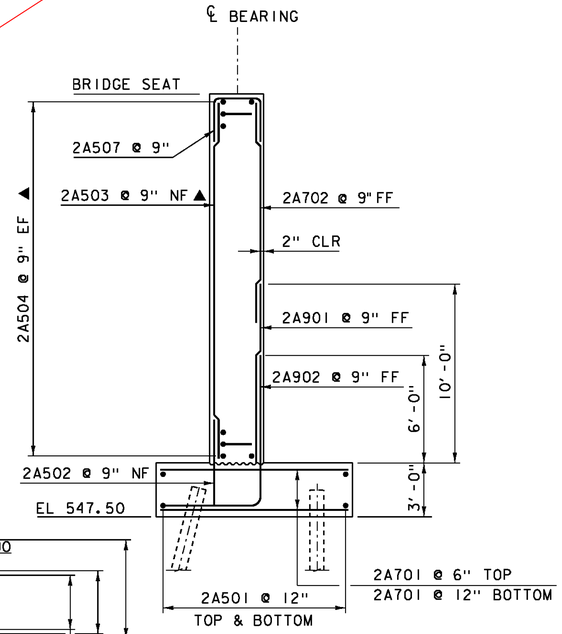


## ABUTMENT 2 REINFORCING AT BRIDGE SEAT

SCALE: 1/4″ = 1′-0″

NOTE:

NF = NEAR FACE
FF = FAR FACE
EF = EACH FACE
▲ = CUT TO FIT IN FIELD
▬ = MECHANICAL CONNECTOR
3″ CLEAR, UNLESS OTHERWISE SPECIFIED ON THE PLANS.
2′-2″ LAP FOR #5 BAR
2′-7″ LAP FOR #6 BAR
3′-5″ LAP FOR #7 BAR
4′-6″ LAP FOR #8 BAR

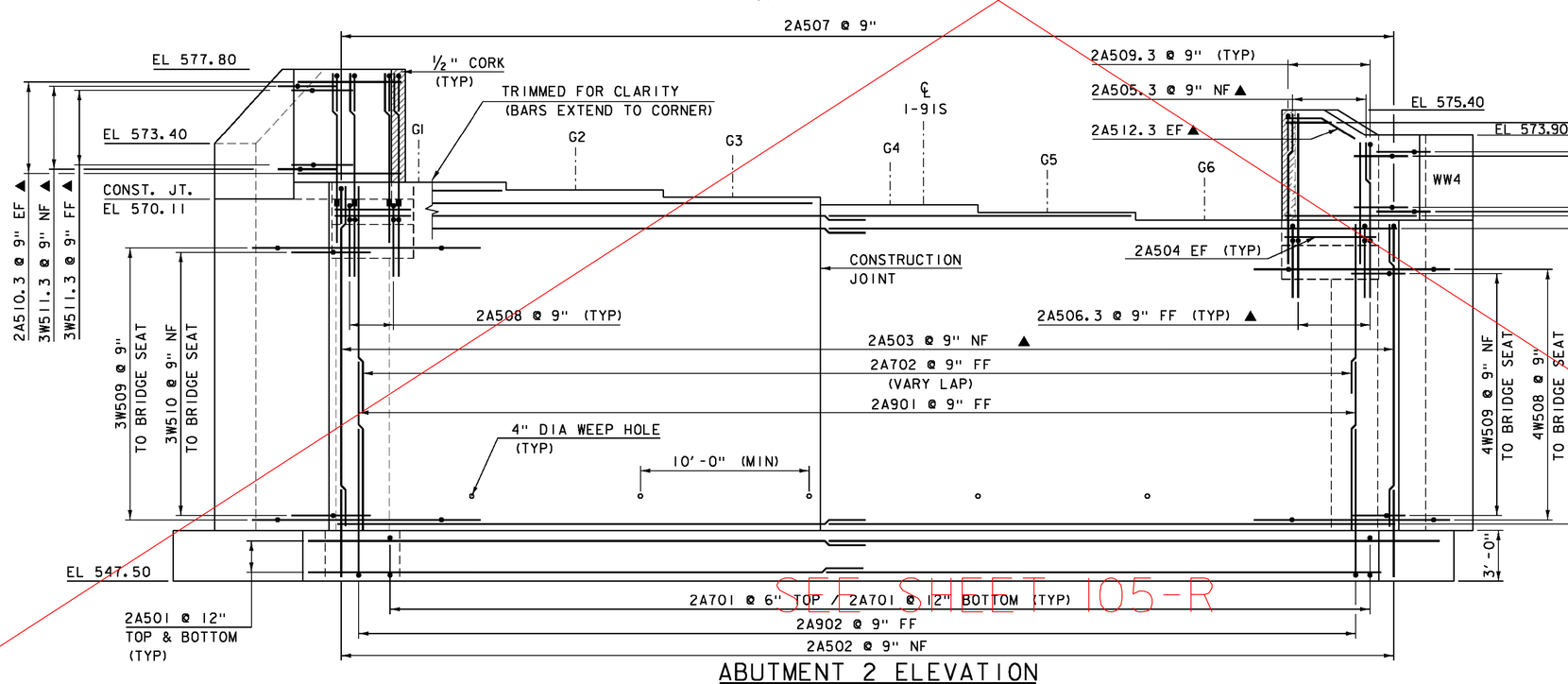


SEE SHEET 105-R

## ABUTMENT 2 ELEVATION

SCALE: 1/4″ = 1′-0″

| | |
|---|---|
| PROJECT NAME: | HARTFORD |
| PROJECT NUMBER: | IM 091-2(79) |
| FILE NAME: sl2al32sub_ab2 | PLOT DATE: 15-DEC-2014 |
| PROJECT LEADER: K. HIGGINS | DRAWN BY: J. SALVATORI |
| DESIGNED BY: G. LAROCHE | CHECKED BY: G. LAROCHE |
| ABUTMENT 2 | SHEET 105 OF 166 |

| REVISION | DATE | DESCRIPTION | BY |
|---|---|---|---|
| 1 | 04-23-2015 | WINGWALL 4 ROTATED 5 DEGREES | JS |

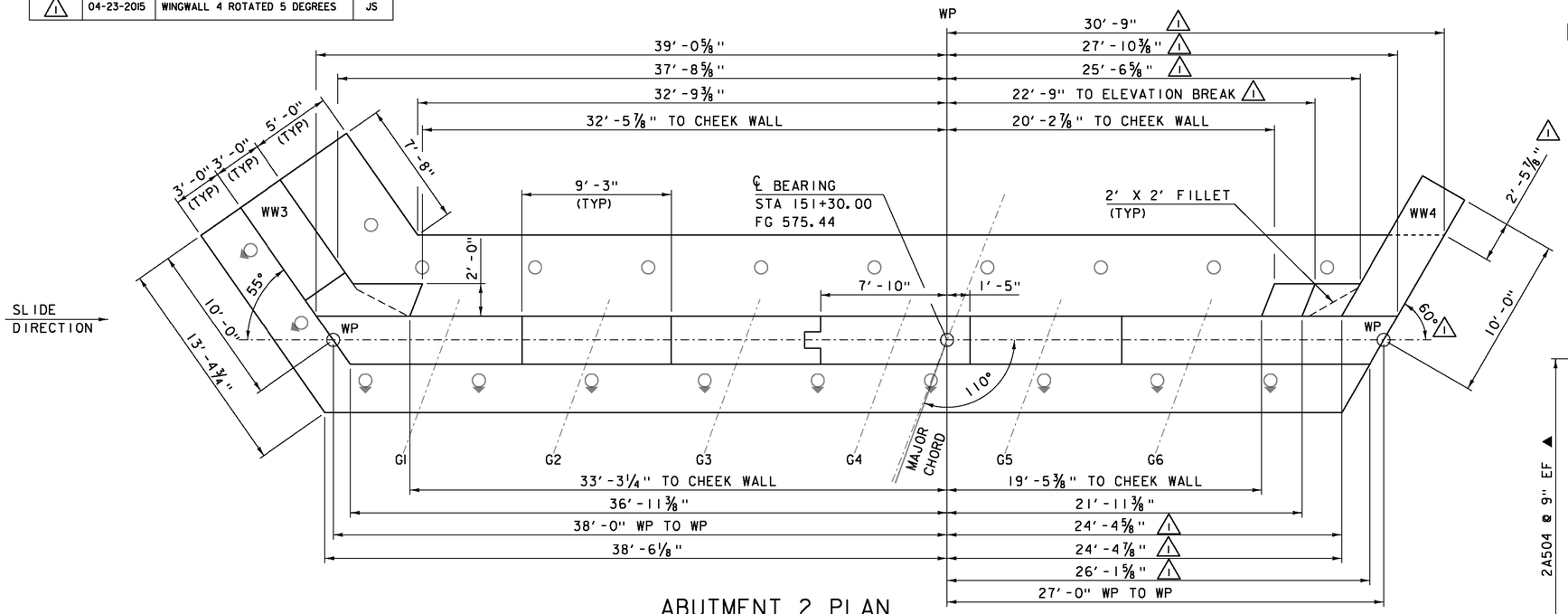


## ABUTMENT 2 PLAN

SCALE: 1/4" = 1'-0"

## BRIDGE SEAT ELEVATIONS

| GIRDER | ELEVATION |
|---|---|
| G1 | 571.11 |
| G2 | 570.66 |
| G3 | 570.22 |
| G4 | 569.77 |
| G5 | 569.32 |
| G6 | 568.87 |

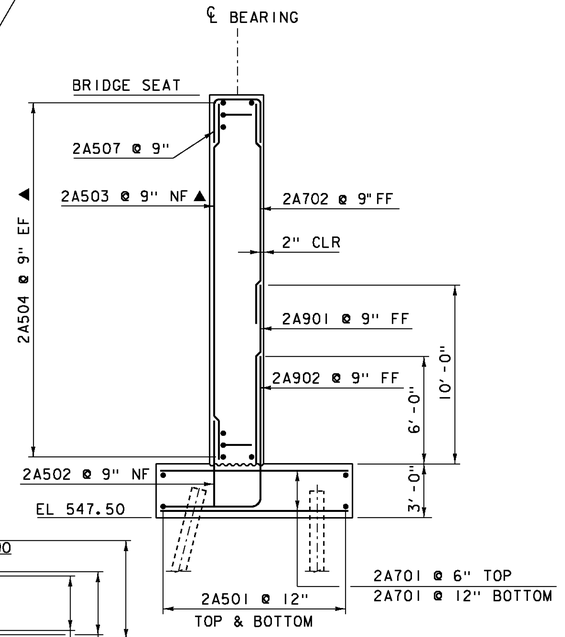


## ABUTMENT 2 REINFORCING AT BRIDGE SEAT

SCALE: 1/4" = 1'-0"

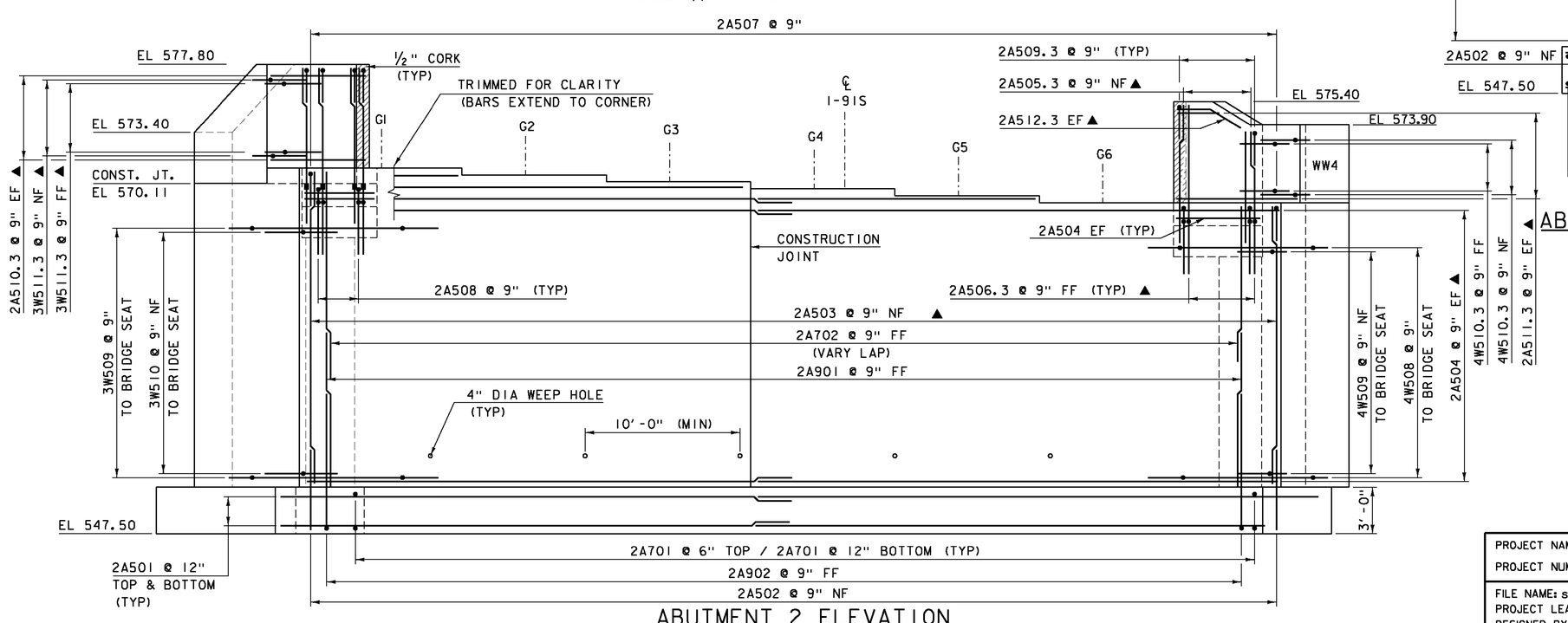


## ABUTMENT 2 ELEVATION

SCALE: 1/4" = 1'-0"

### NOTE:

NF = NEAR FACE
FF = FAR FACE
EF = EACH FACE
▲ = CUT TO FIT IN FIELD
▬ = MECHANICAL CONNECTOR
3" CLEAR, UNLESS OTHERWISE SPECIFIED ON THE PLANS.
2'-2" LAP FOR #5 BAR
2'-7" LAP FOR #6 BAR
3'-5" LAP FOR #7 BAR
4'-6" LAP FOR #8 BAR

PROJECT NAME: HARTFORD
PROJECT NUMBER: IM 091-2(79)

FILE NAME: sl2al32sub_ab2
PROJECT LEADER: K. HIGGINS
DESIGNED BY: G. LAROCHE
ABUTMENT 2

PLOT DATE: 23-APR-2015
DRAWN BY: J. SALVATORI
CHECKED BY: G. LAROCHE
SHEET 105R OF 166

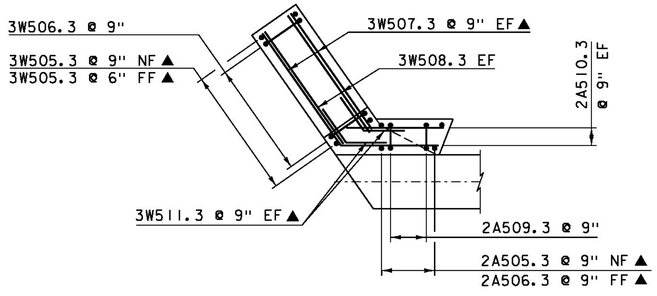


## WINGWALL 3 CORNER DETAIL ABOVE BRIDGE SEAT

SCALE: 1/4" = 1'-0"

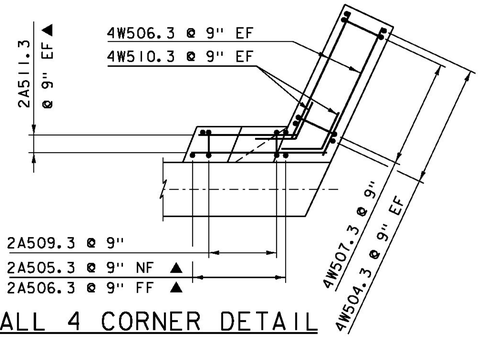


## WINGWALL 4 CORNER DETAIL ABOVE BRIDGE SEAT

SCALE: 1/4" = 1'-0"

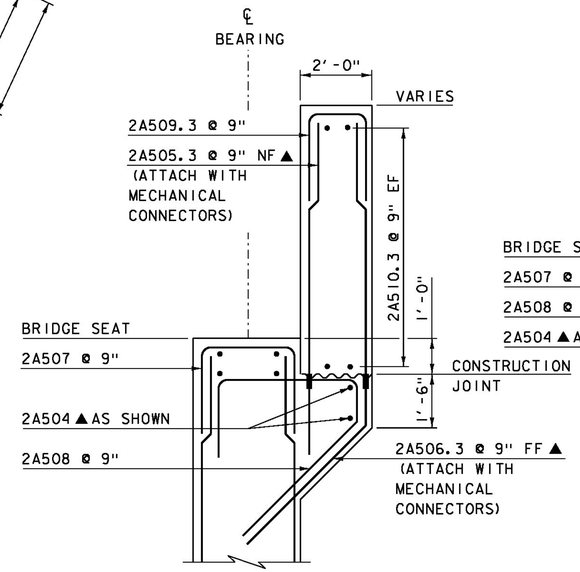


## ABUTMENT 2 CHEEK WALL REINFORCING @ WW3

SCALE: 1/4" = 1'-0"

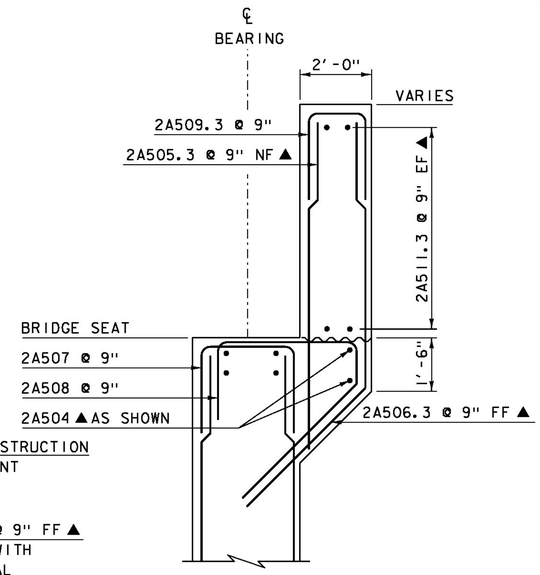


## ABUTMENT 2 CHEEK WALL REINFORCING @ WW4

SCALE: 1/4" = 1'-0"

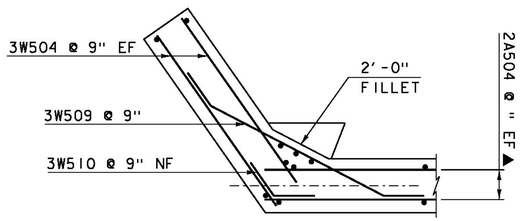


## WINGWALL 3 CORNER DETAIL BELOW BRIDGE SEAT

SCALE: 1/4" = 1'-0"

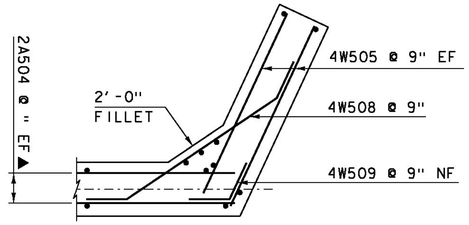


## WINGWALL 4 CORNER DETAIL BELOW BRIDGE SEAT

SCALE: 1/4" = 1'-0"

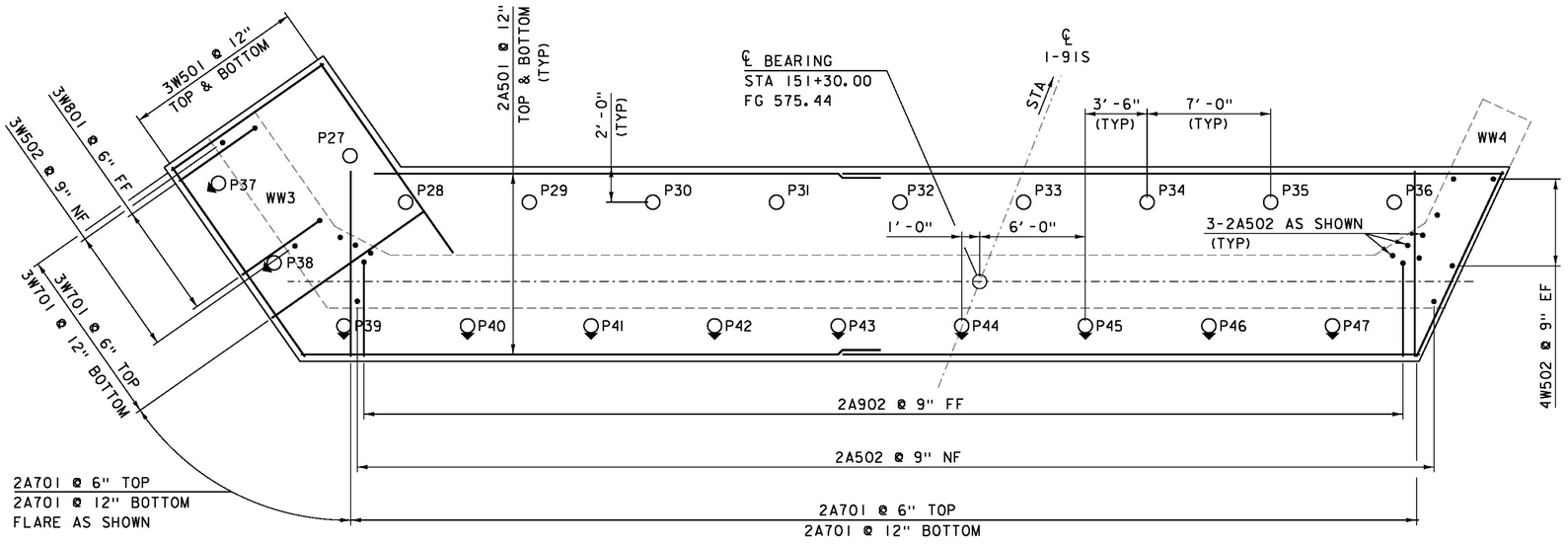


## ABUTMENT 2 FOOTING PLAN

SCALE: 1/4" = 1'-0"

NOTE:

NF = NEAR FACE
FF = FAR FACE
EF = EACH FACE
▲ = CUT TO FIT IN FIELD
▬ = MECHANICAL CONNECTOR
3" CLEAR, UNLESS OTHERWISE SPECIFIED ON THE PLANS.
2'-2" LAP FOR #5 BAR
2'-7" LAP FOR #6 BAR
3'-5" LAP FOR #7 BAR
4'-6" LAP FOR #8 BAR

| | |
|---|---|
| PROJECT NAME: | HARTFORD |
| PROJECT NUMBER: | IM 091-2(79) |
| FILE NAME: sl2al32sub_ab2 | PLOT DATE: 15-DEC-2014 |
| PROJECT LEADER: K. HIGGINS | DRAWN BY: J. SALVATORI |
| DESIGNED BY: G. LAROCHE | CHECKED BY: G. LAROCHE |
| ABUTMENT 2 FOOTING | SHEET 106 OF 166 |

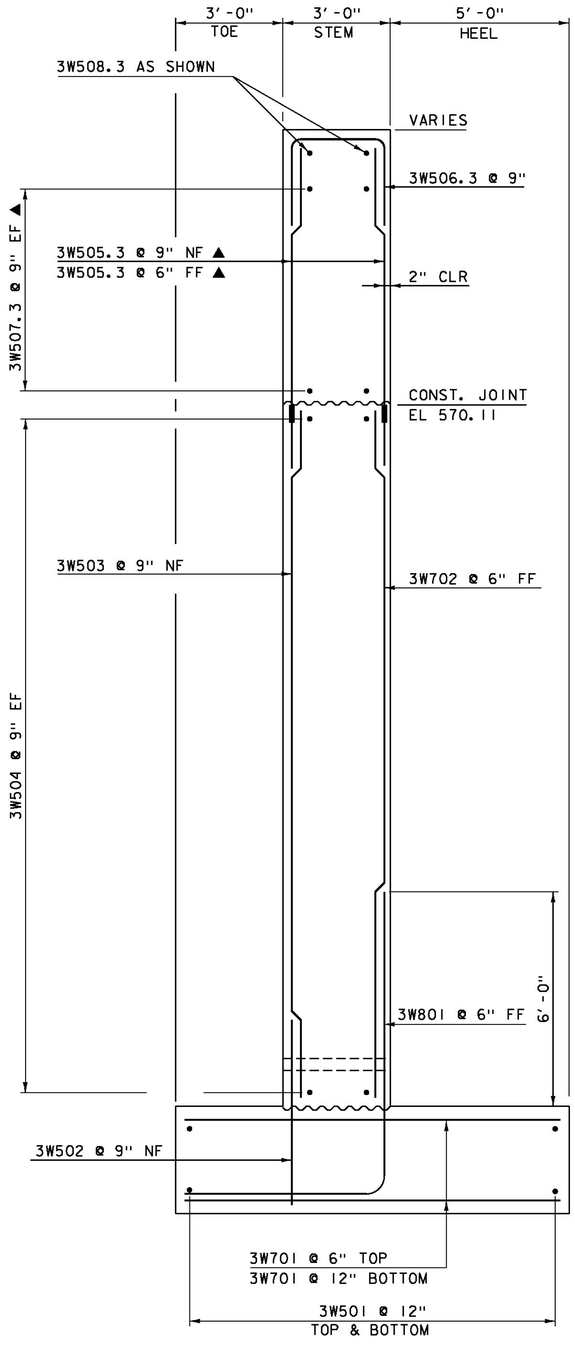


## WINGWALL 3 TYPICAL

SCALE: ½" = 1'-0"

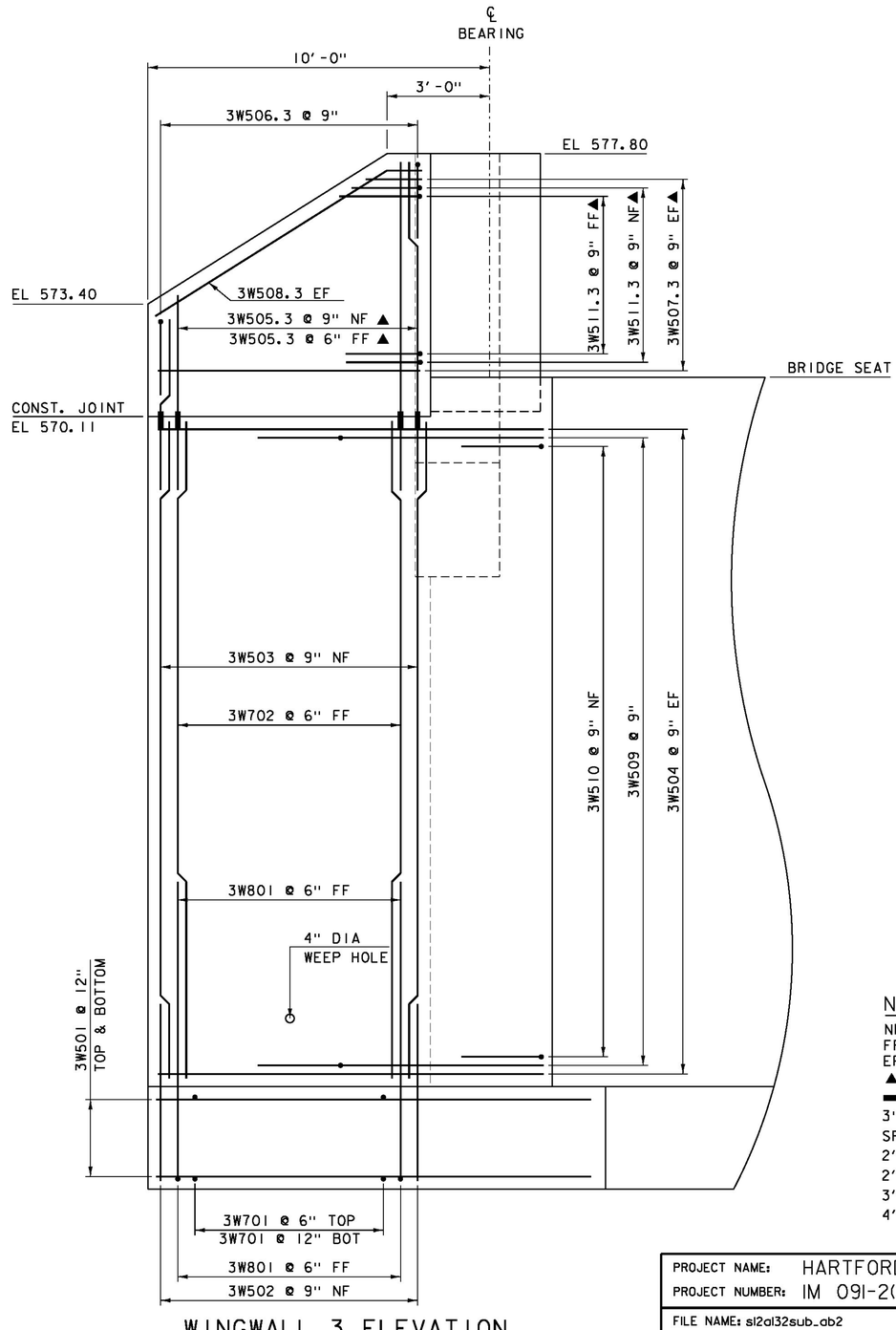


## WINGWALL 3 ELEVATION

SCALE: ½" = 1'-0"

NOTE:

NF = NEAR FACE
FF = FAR FACE
EF = EACH FACE
▲ = CUT TO FIT IN FIELD
▬ = MECHANICAL CONNECTOR
3" CLEAR, UNLESS OTHERWISE SPECIFIED ON THE PLANS.
2'-2" LAP FOR #5 BAR
2'-7" LAP FOR #6 BAR
3'-5" LAP FOR #7 BAR
4'-6" LAP FOR #8 BAR

PROJECT NAME: HARTFORD
PROJECT NUMBER: IM 091-2(79)

FILE NAME: sl2al32sub_ab2
PROJECT LEADER: K. HIGGINS
DESIGNED BY: G. LAROCHE
WINGWALL 3 DETAILS

PLOT DATE: 15-DEC-2014
DRAWN BY: J. SALVATORI
CHECKED BY: G. LAROCHE
SHEET 107 OF 166

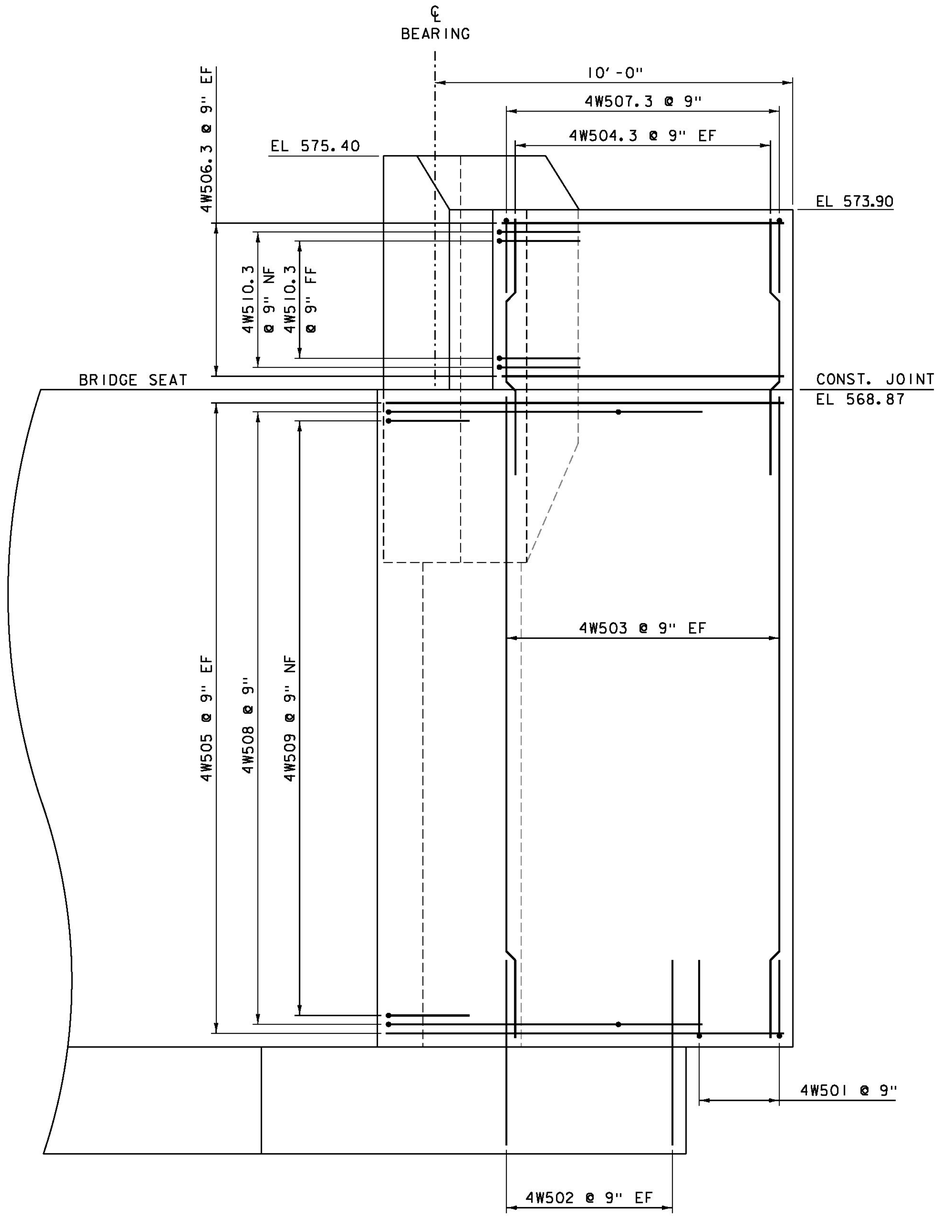


## WINGWALL 4 ELEVATION

SCALE: ½" = 1'-0"

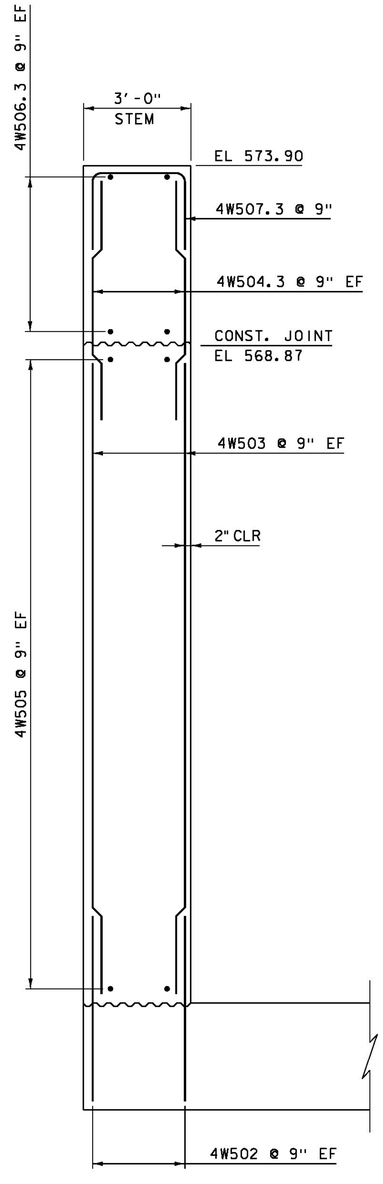


## WINGWALL 4 TYPICAL OVER FOOTING

SCALE: ½" = 1'-0"

NOTE:

NF = NEAR FACE
FF = FAR FACE
EF = EACH FACE
▲ = CUT TO FIT IN FIELD
▬ = MECHANICAL CONNECTOR
3" CLEAR, UNLESS OTHERWISE SPECIFIED ON THE PLANS.
2'-2" LAP FOR #5 BAR
2'-7" LAP FOR #6 BAR
3'-5" LAP FOR #7 BAR
4'-6" LAP FOR #8 BAR

| | |
|---|---|
| PROJECT NAME: | HARTFORD |
| PROJECT NUMBER: | IM 091-2(79) |
| FILE NAME: sl2al32sub_ab2 | PLOT DATE: 15-DEC-2014 |
| PROJECT LEADER: K. HIGGINS | DRAWN BY: J. SALVATORI |
| DESIGNED BY: G. LAROCHE | CHECKED BY: G. LAROCHE |
| WINGWALL 4 DETAILS | SHEET 108 OF 166 |

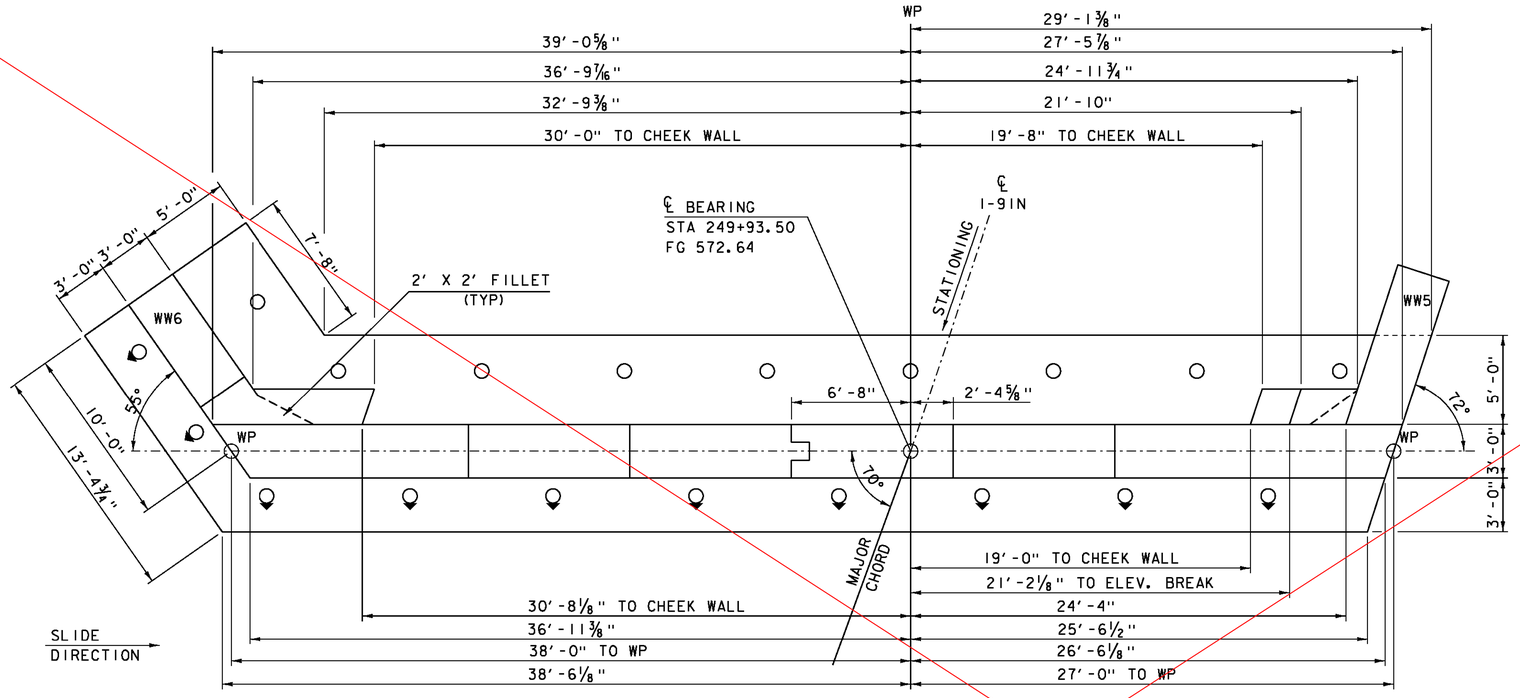


## ABUTMENT 3 PLAN

SCALE: 1/4″ = 1′-0″

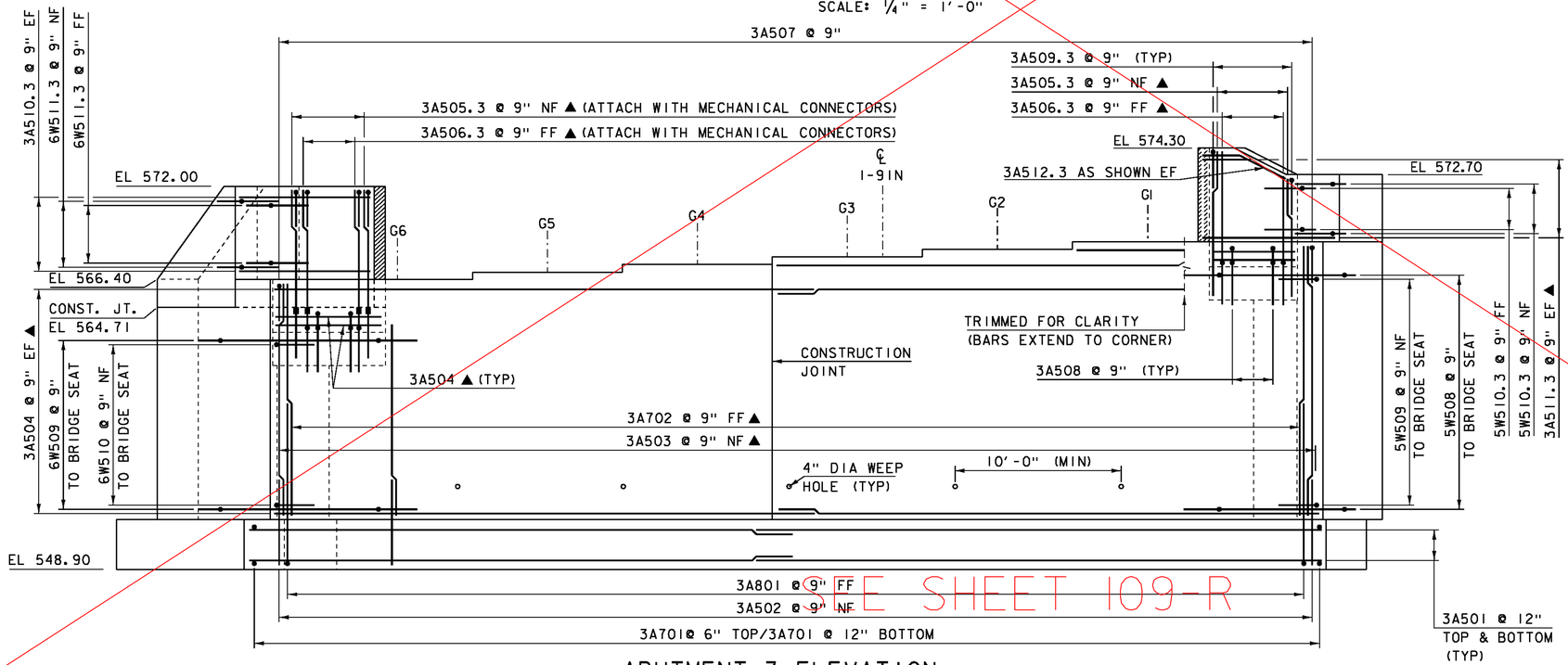


## ABUTMENT 3 ELEVATION

SCALE: 1/4″ = 1′-0″

SEE SHEET 109-R

## BRIDGE SEAT ELEVATIONS

| GIRDER | ELEVATION |
|---|---|
| G1 | 568.65 |
| G2 | 568.20 |
| G3 | 567.74 |
| G4 | 567.29 |
| G5 | 566.83 |
| G6 | 566.38 |

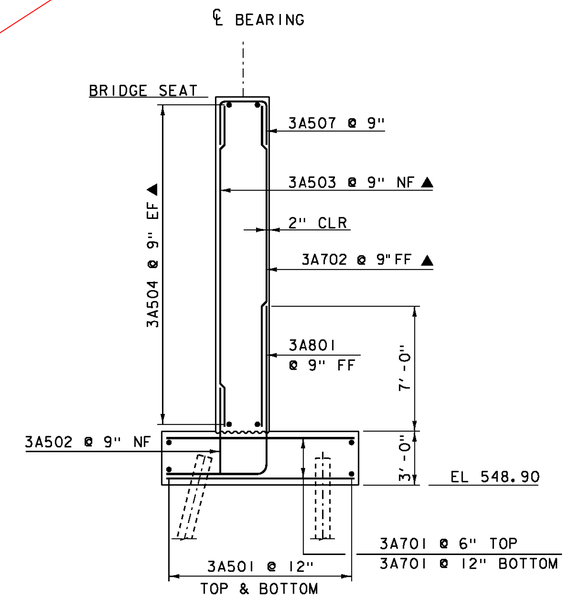


## ABUTMENT 3 TYPICAL

SCALE: 1/4″ = 1′-0″

### NOTE:

NF = NEAR FACE
FF = FAR FACE
EF = EACH FACE
▲ = CUT TO FIT IN FIELD
▬ = MECHANICAL CONNECTOR
3″ CLEAR, UNLESS OTHERWISE SPECIFIED ON THE PLANS.
2′-2″ LAP FOR #5 BAR
2′-7″ LAP FOR #6 BAR
3′-5″ LAP FOR #7 BAR
4′-6″ LAP FOR #8 BAR

PROJECT NAME: HARTFORD
PROJECT NUMBER: IM 091-2(79)

FILE NAME: s12a132sub_ab3
PROJECT LEADER: K. HIGGINS
DESIGNED BY: G. LAROCHE
ABUTMENT 3

PLOT DATE: 15-DEC-2014
DRAWN BY: J. SALVATORI
CHECKED BY: G. LAROCHE
SHEET 109 OF 166

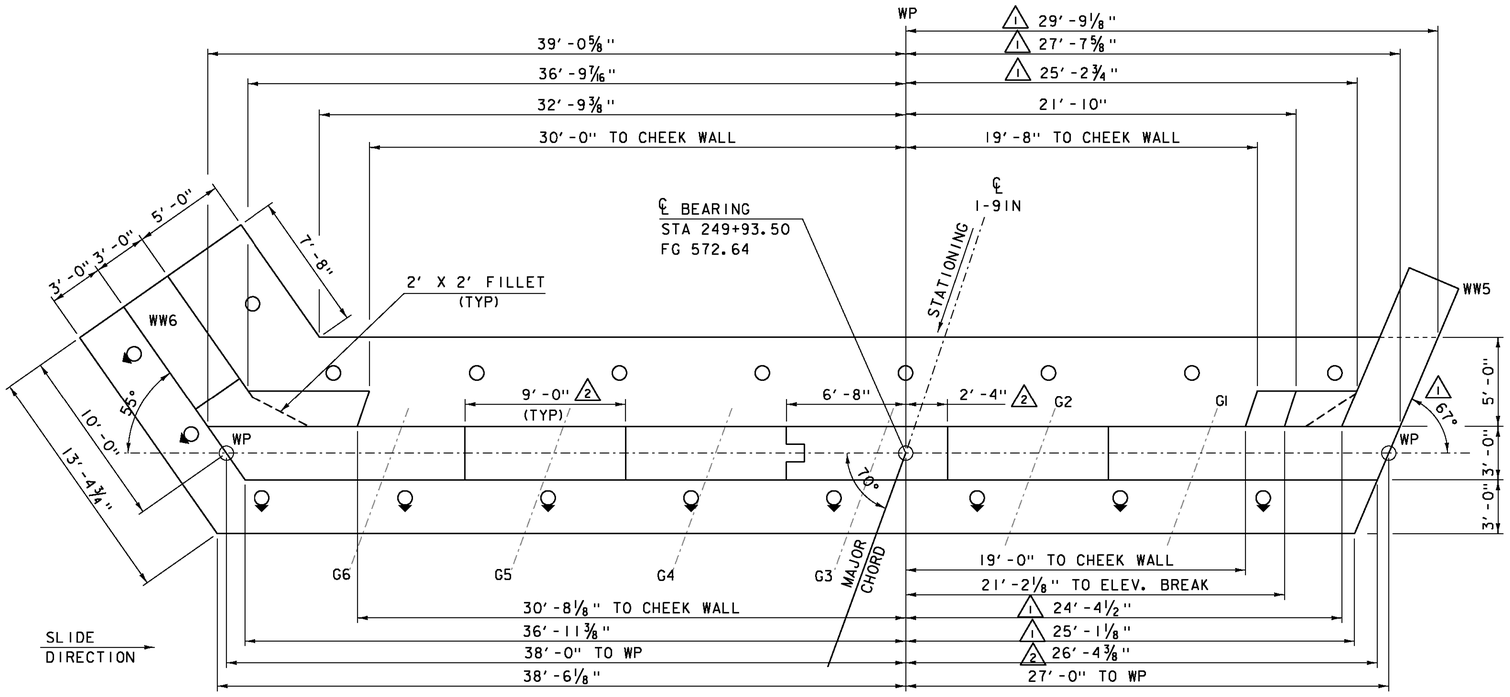


## ABUTMENT 3 PLAN

SCALE: 1/4" = 1'-0"

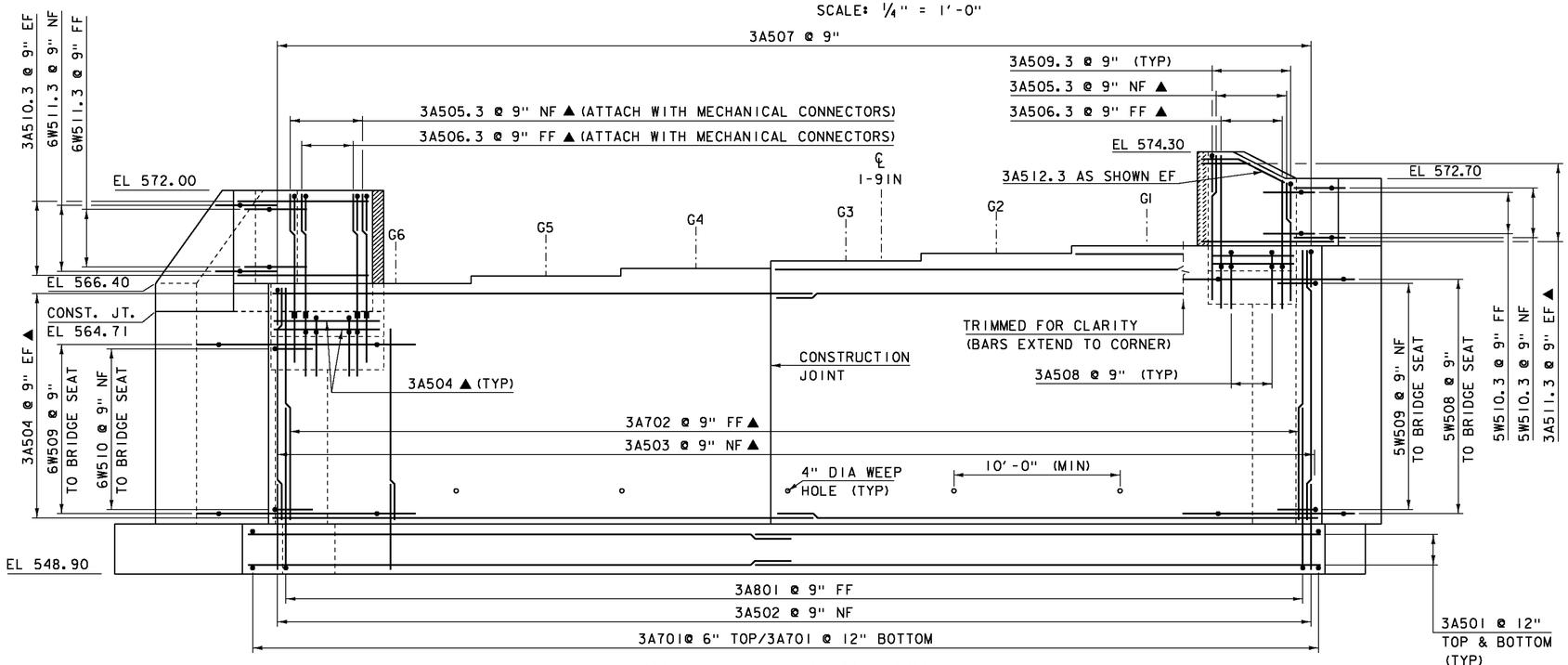


## ABUTMENT 3 ELEVATION

SCALE: 1/4" = 1'-0"

## BRIDGE SEAT ELEVATIONS

| GIRDER | ELEVATION |
|---|---|
| G1 | 568.65 |
| G2 | 568.20 |
| G3 | 567.74 |
| G4 | 567.29 |
| G5 | 566.83 |
| G6 | 566.38 |

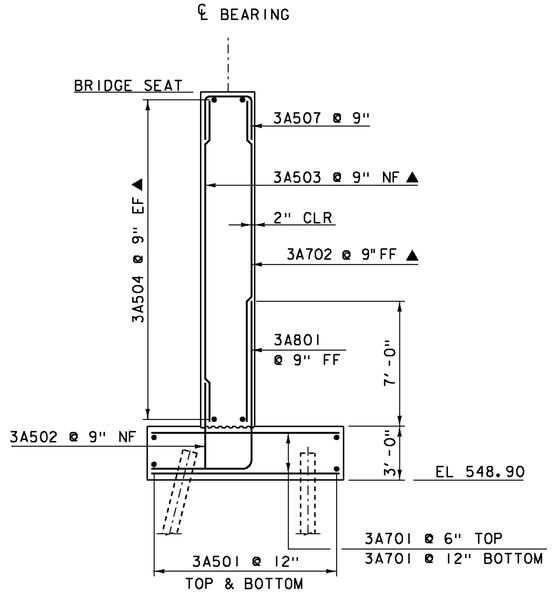


## ABUTMENT 3 TYPICAL

SCALE: 1/4" = 1'-0"

| REVISION | DATE | DESCRIPTION | BY |
|---|---|---|---|
| 1 | 04-23-2015 | WINGWALL 5 ROTATED 5 DEGREES | JS |
| 2 | 05-04-2015 | ADDED OR REIVSED DIMENSIONS | JS |

### NOTE:

NF = NEAR FACE
FF = FAR FACE
EF = EACH FACE
▲ = CUT TO FIT IN FIELD
▬ = MECHANICAL CONNECTOR
3" CLEAR, UNLESS OTHERWISE SPECIFIED ON THE PLANS.
2'-2" LAP FOR #5 BAR
2'-7" LAP FOR #6 BAR
3'-5" LAP FOR #7 BAR
4'-6" LAP FOR #8 BAR

PROJECT NAME: HARTFORD
PROJECT NUMBER: IM 091-2(79)

FILE NAME: s12a132sub_ab3
PROJECT LEADER: K. HIGGINS
DESIGNED BY: G. LAROCHE
ABUTMENT 3

PLOT DATE: 04-MAY-2015
DRAWN BY: J. SALVATORI
CHECKED BY: G. LAROCHE
SHEET 109R OF 166

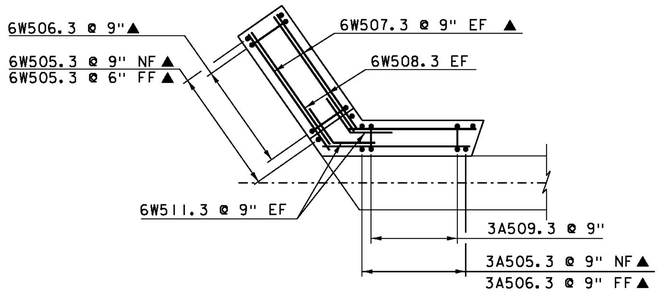


## WINGWALL 6 CORNER DETAIL ABOVE BRIDGE SEAT

SCALE: 1/4" = 1'-0"

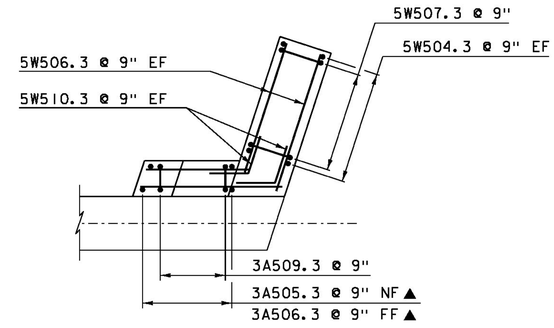


## WINGWALL 5 CORNER DETAIL ABOVE BRIDGE SEAT

SCALE: 1/4" = 1'-0"

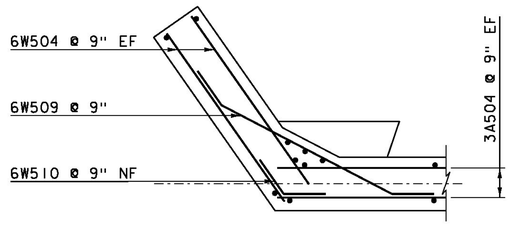


## WINGWALL 6 CORNER DETAIL BELOW BRIDGE SEAT

SCALE: 1/4" = 1'-0"

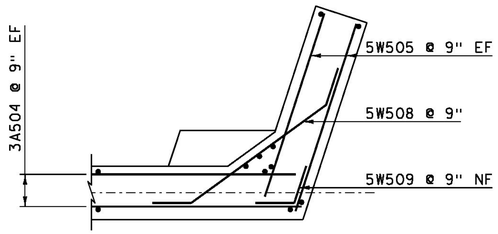


## WINGWALL 5 CORNER DETAIL BELOW BRIDGE SEAT

SCALE: 1/4" = 1'-0"

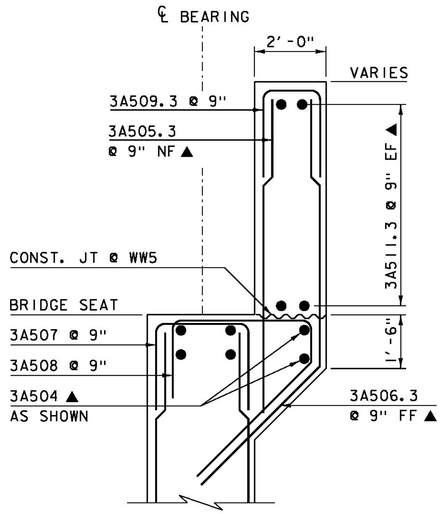


## ABUTMENT 3 CHEEK WALL REINFORCING @ WW 5

SCALE: 1/2" = 1'-0"

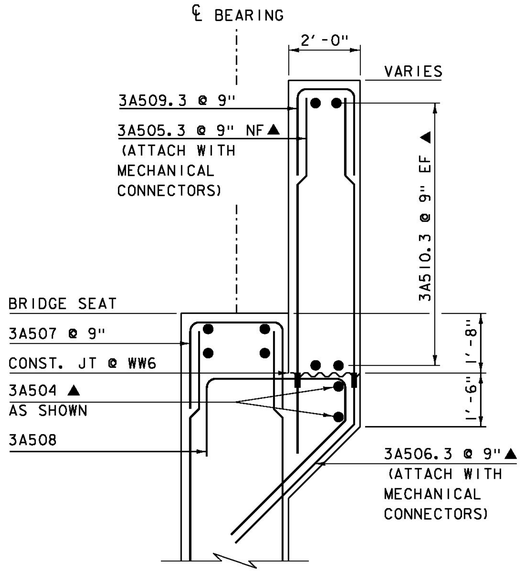


## ABUTMENT 3 CHEEK WALL REINFORCING @ WW 6

SCALE: 1/2" = 1'-0"

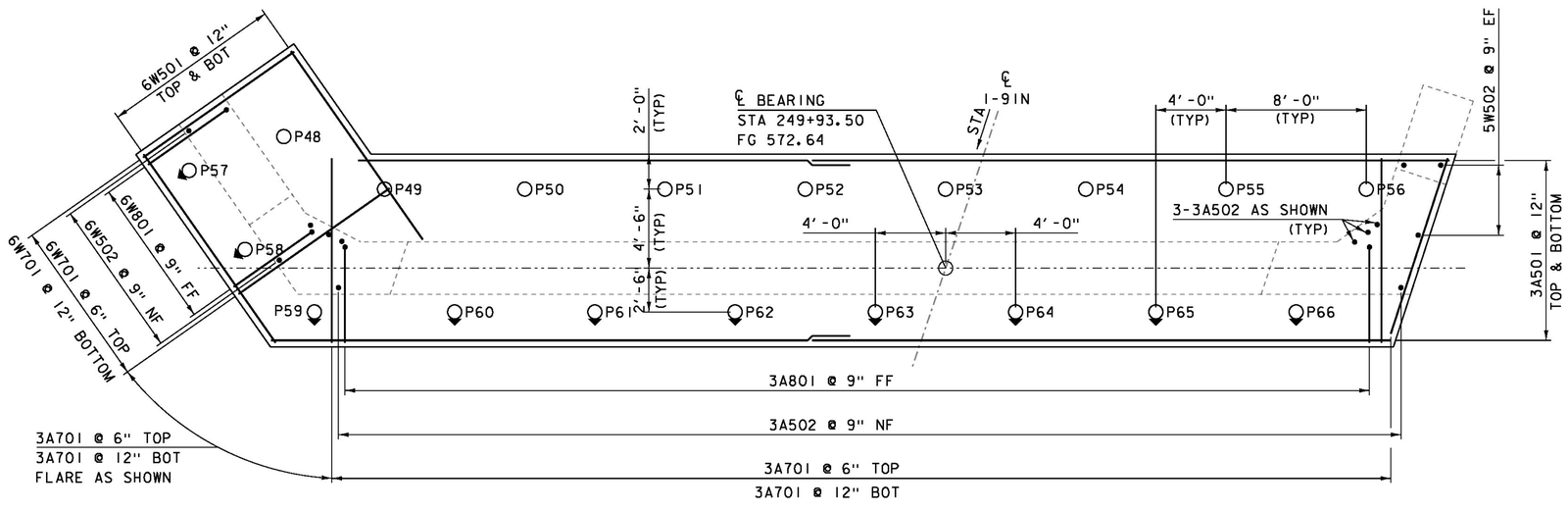


## ABUTMENT 3 FOOTING PLAN

SCALE: 1/4" = 1'-0"

### NOTE:

NF = NEAR FACE
FF = FAR FACE
EF = EACH FACE
▲ = CUT TO FIT IN FIELD
▬ = MECHANICAL CONNECTOR
3" CLEAR, UNLESS OTHERWISE SPECIFIED ON THE PLANS.
2'-2" LAP FOR #5 BAR
2'-7" LAP FOR #6 BAR
3'-5" LAP FOR #7 BAR
4'-6" LAP FOR #8 BAR
5'-9" LAP FOR #9 BAR

PROJECT NAME: HARTFORD
PROJECT NUMBER: IM 091-2(79)

FILE NAME: sl2al32sub_ab3
PROJECT LEADER: K. HIGGINS
DESIGNED BY: G. LAROCHE
ABUTMENT 3 FOOTING

PLOT DATE: 15-DEC-2014
DRAWN BY: J. SALVATORI
CHECKED BY: G. LAROCHE
SHEET 110 OF 166

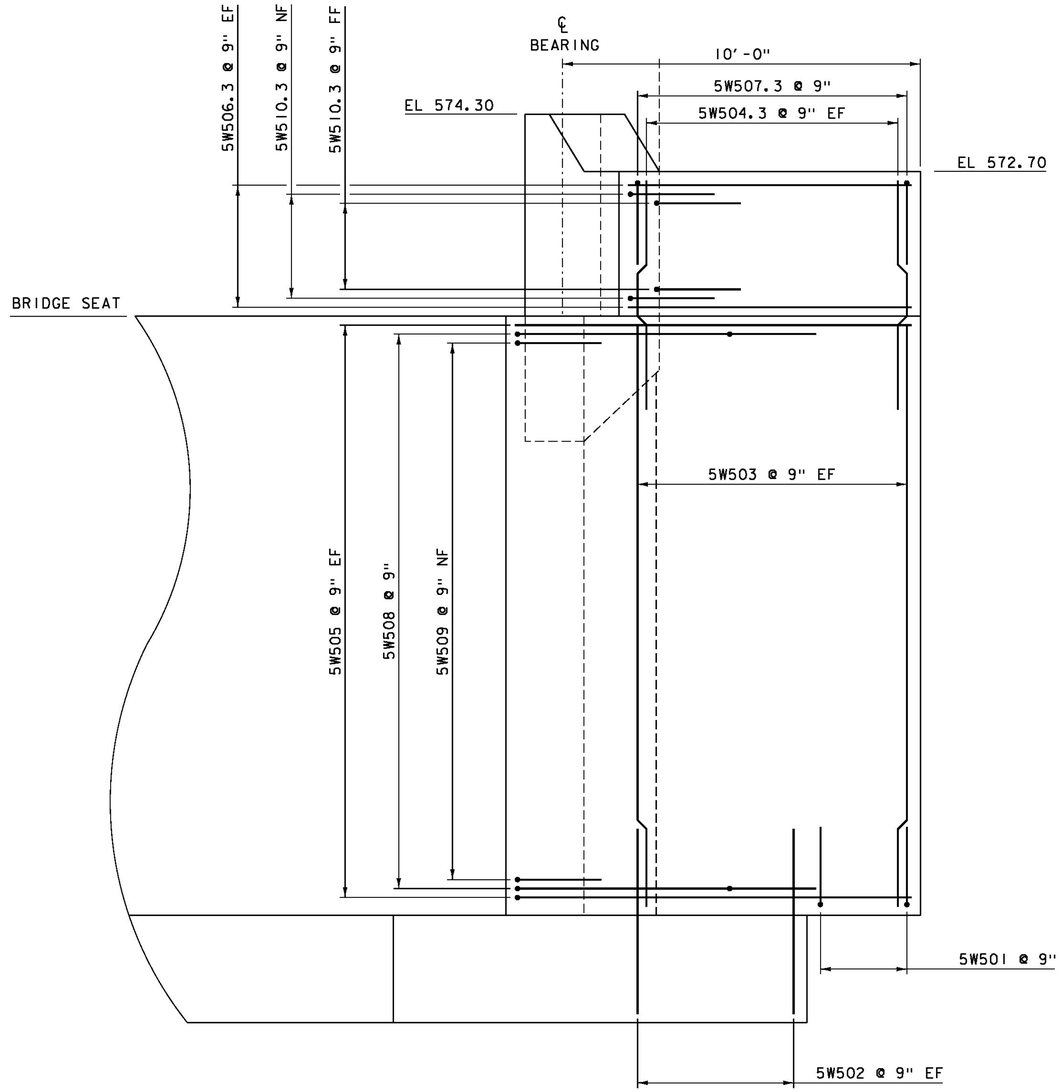


## WINGWALL 5 ELEVATION

SCALE: 1/4" = 1'-0"

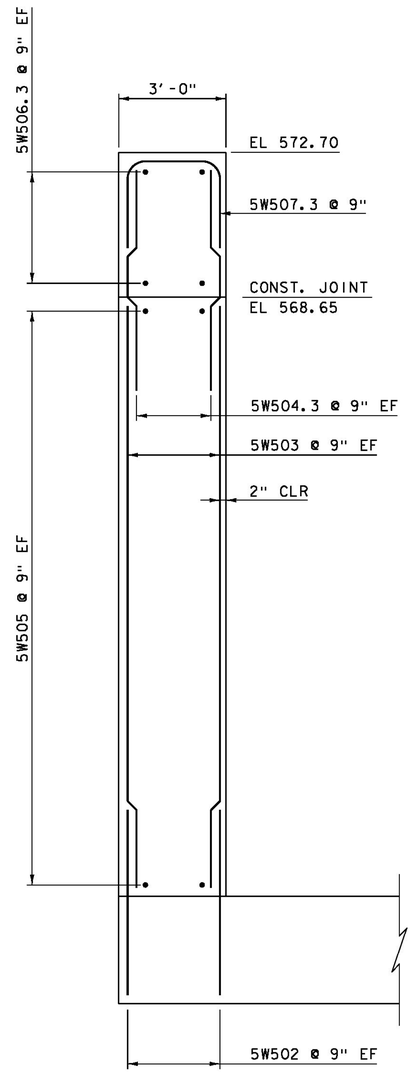


## WINGWALL 5 TYPICAL

SCALE: 1/4" = 1'-0"

NOTE:

NF = NEAR FACE
FF = FAR FACE
EF = EACH FACE
▲ = CUT TO FIT IN FIELD
▬ = MECHANICAL CONNECTOR
3" CLEAR, UNLESS OTHERWISE SPECIFIED ON THE PLANS.
2'-2" LAP FOR #5 BAR
2'-7" LAP FOR #6 BAR
3'-5" LAP FOR #7 BAR
4'-6" LAP FOR #8 BAR

| | |
|---|---|
| PROJECT NAME: | HARFORD |
| PROJECT NUMBER: | IM 091-2(79) |
| FILE NAME: s12a132sub_ab3.dgn | PLOT DATE: 15-DEC-2014 |
| PROJECT LEADER: K. HIGGINS | DRAWN BY: J. SALVATORI |
| DESIGNED BY: G. LAROCHE | CHECKED BY: G. LAROCHE |
| WINGWALL 5 DETAILS | SHEET 111 OF 166 |

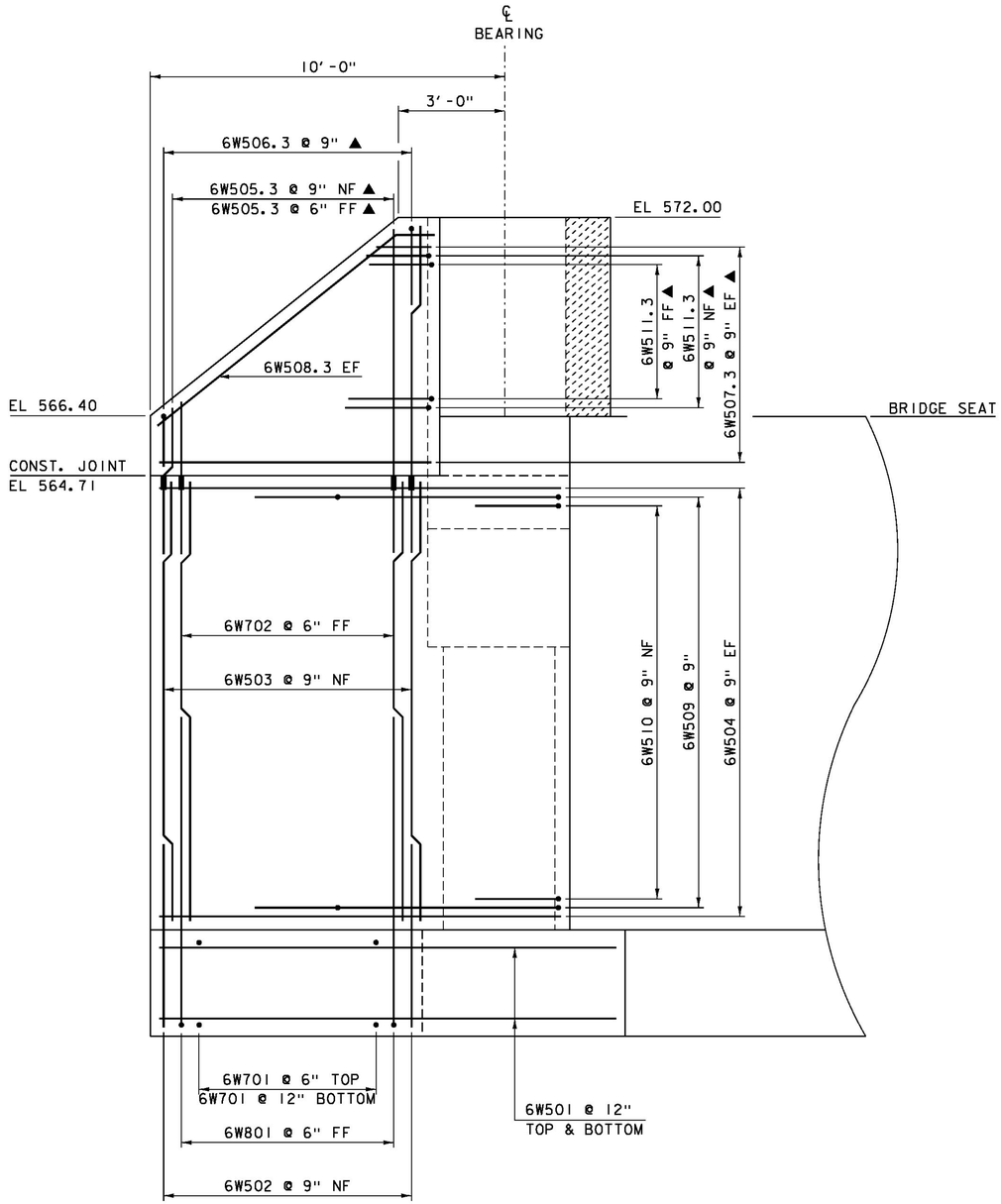


## WINGWALL 6 ELEVATION

SCALE: 1/4" = 1'-0"

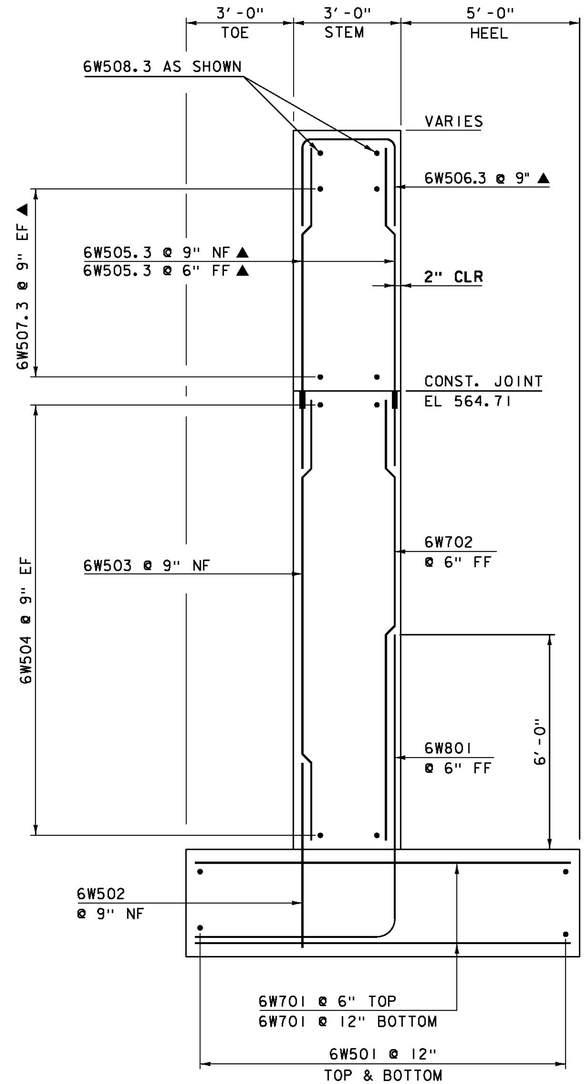


## WINGWALL 6 TYPICAL

SCALE: 1/4" = 1'-0"

NOTE:

NF = NEAR FACE
FF = FAR FACE
EF = EACH FACE
▲ = CUT TO FIT IN FIELD
▬ = MECHANICAL CONNECTOR
3" CLEAR, UNLESS OTHERWISE SPECIFIED ON THE PLANS.
2'-2" LAP FOR #5 BAR
2'-7" LAP FOR #6 BAR
3'-5" LAP FOR #7 BAR
4'-6" LAP FOR #8 BAR

| | |
|---|---|
| PROJECT NAME: HARFORD | |
| PROJECT NUMBER: IM 091-2(79) | |
| FILE NAME: sl2al32sub_ab3.dgn | PLOT DATE: 15-DEC-2014 |
| PROJECT LEADER: K. HIGGINS | DRAWN BY: J. SALVATORI |
| DESIGNED BY: G. LAROCHE | CHECKED BY: G. LAROCHE |
| WINGWALL 6 DETAILS | SHEET 112 OF 166 |

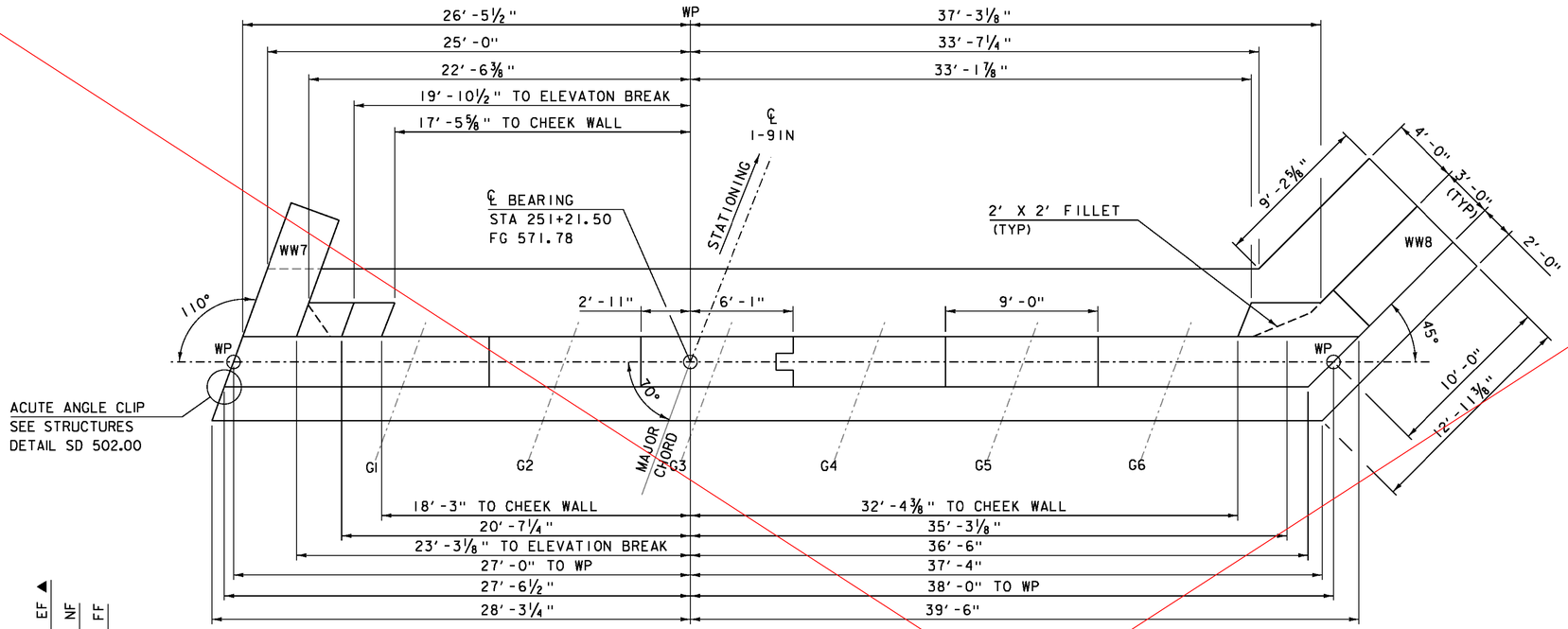


## ABUTMENT 4 PLAN

SCALE: ¼" = 1'-0"

## BRIDGE SEAT ELEVATIONS

| GIRDER | ELEVATION |
|---|---|
| G1 | 567.81 |
| G2 | 567.35 |
| G3 | 566.88 |
| G4 | 566.40 |
| G5 | 565.93 |
| G6 | 565.47 |

SLIDE DIRECTION

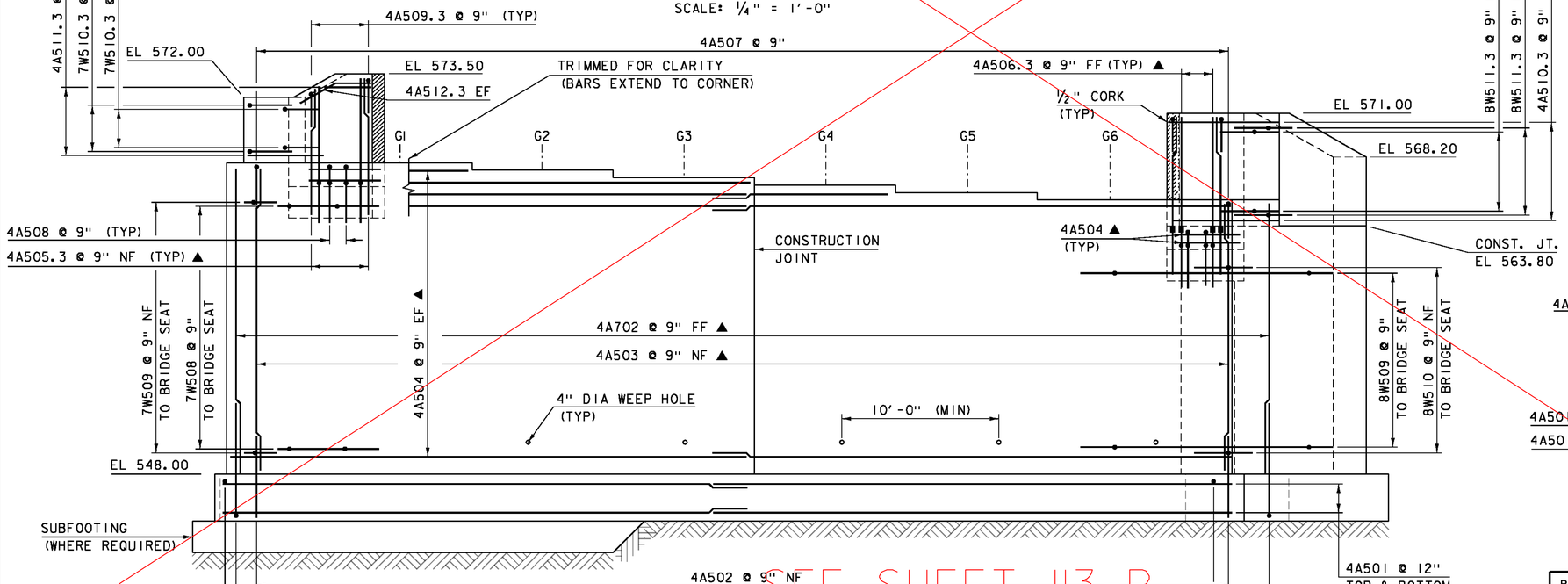


SEE SHEET 113-R

## ABUTMENT 4 ELEVATION

SCALE: ¼" = 1'-0"

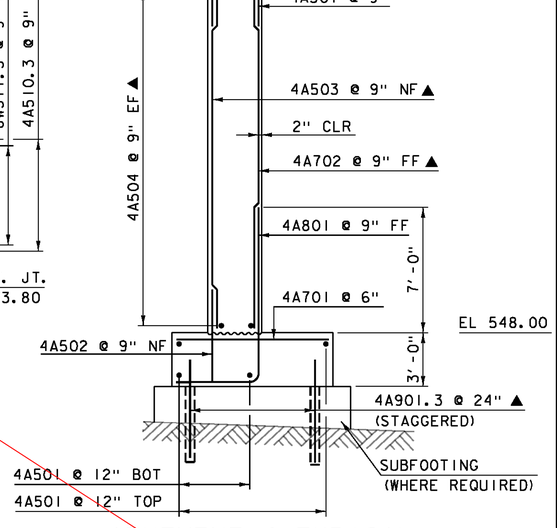


## ABUTMENT 4 TYPICAL AT BRIDGE SEAT

SCALE: ¼" = 1'-0"

| | |
|---|---|
| PROJECT NAME: | HARTFORD |
| PROJECT NUMBER: | IM 091-2(79) |
| FILE NAME: sl2al32sub_ab4 | PLOT DATE: 15-DEC-2014 |
| PROJECT LEADER: K. HIGGINS | DRAWN BY: J. SALVATORI |
| DESIGNED BY: G. LAROCHE | CHECKED BY: G. LAROCHE |
| ABUTMENT 4 | SHEET 113 OF 166 |

| REVISION | DATE | DESCRIPTION | BY |
|---|---|---|---|
| 1 | 04-23-2015 | WINGWALL 7 ROTATED 5 DEGREES | JS |
| 2 | 05-04-2015 | ADDED OR REIVSED DIMENSIONS | JS |

## BRIDGE SEAT ELEVATIONS

| GIRDER | ELEVATION |
|---|---|
| G1 | 567.81 |
| G2 | 567.35 |
| G3 | 566.88 |
| G4 | 566.40 |
| G5 | 565.93 |
| G6 | 565.47 |

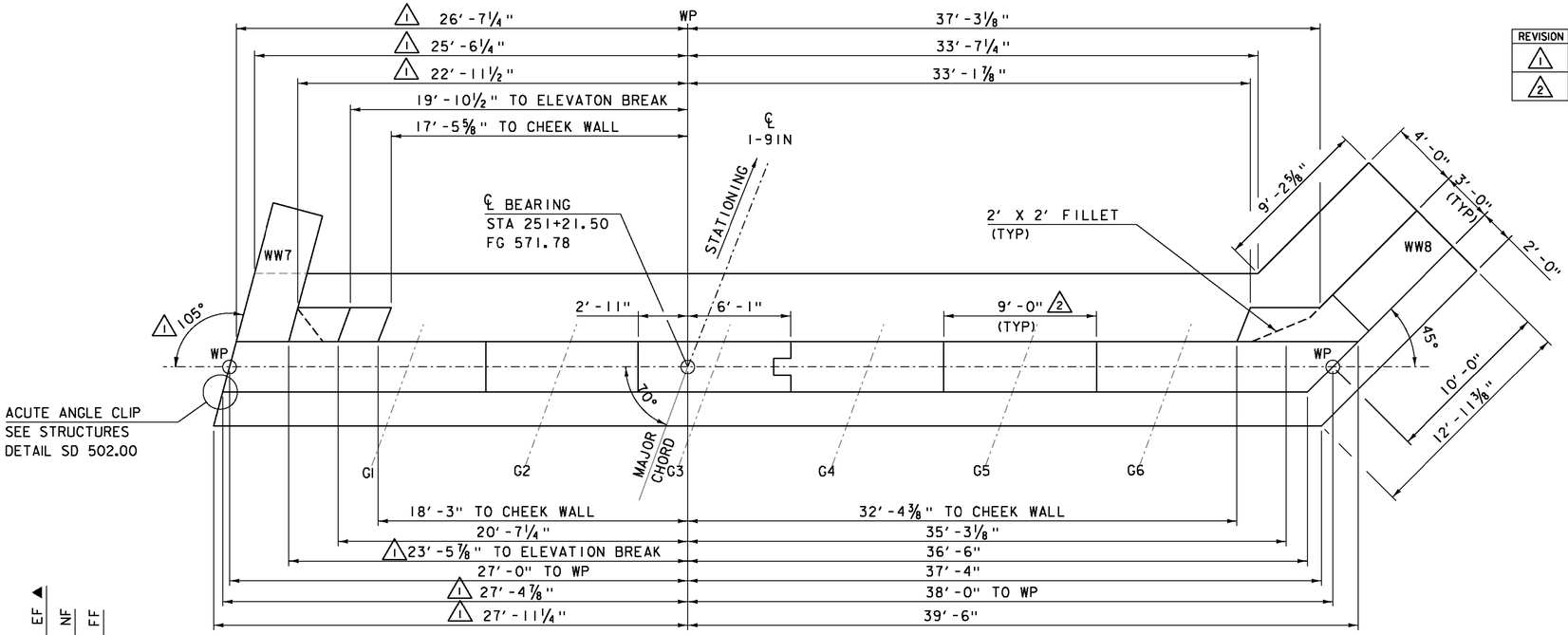


SLIDE DIRECTION

## ABUTMENT 4 PLAN

SCALE: ¼" = 1'-0"

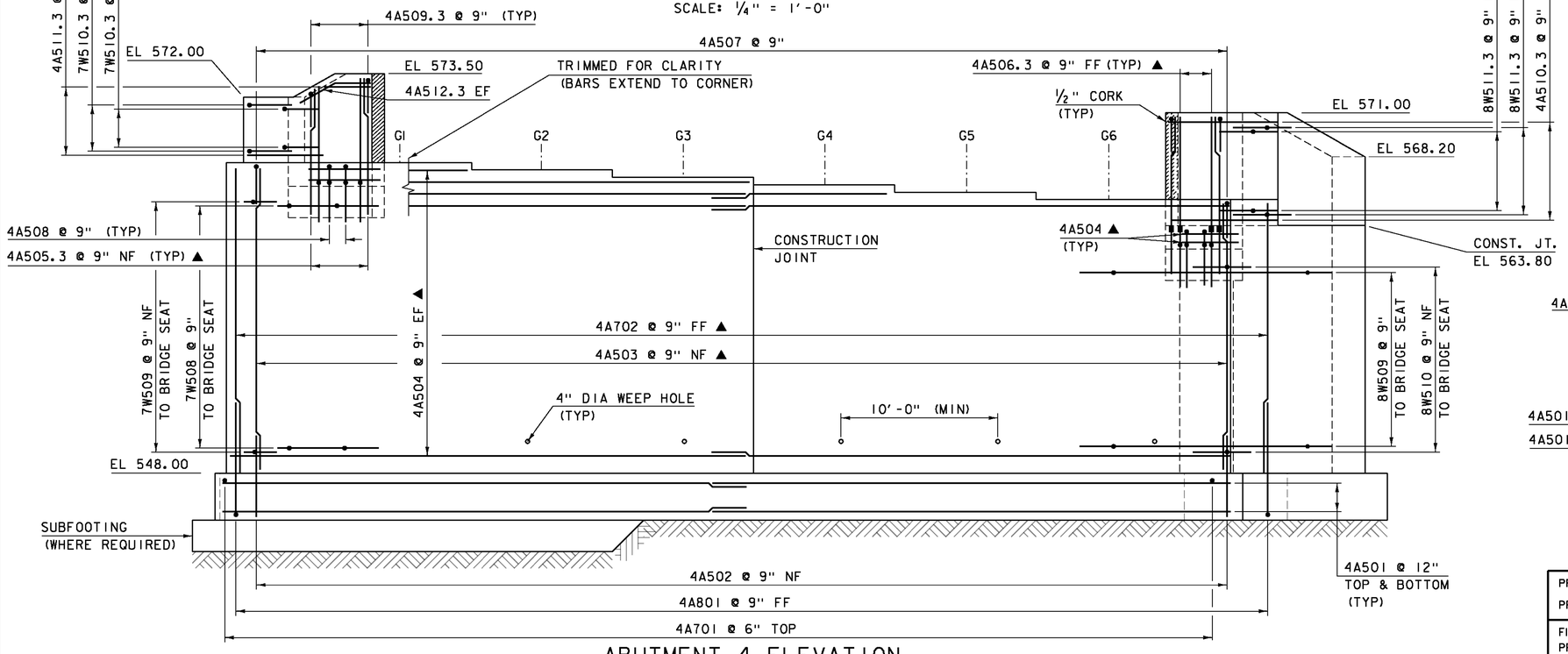


## ABUTMENT 4 ELEVATION

SCALE: ¼" = 1'-0"

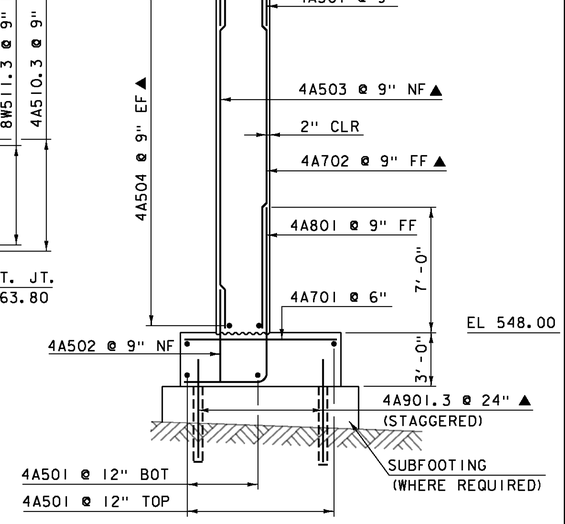


## ABUTMENT 4 TYPICAL AT BRIDGE SEAT

SCALE: ¼" = 1'-0"

| | |
|---|---|
| PROJECT NAME: | HARTFORD |
| PROJECT NUMBER: | IM 091-2(79) |
| FILE NAME: sl2al32sub_ab4 | PLOT DATE: 04-MAY-2015 |
| PROJECT LEADER: K. HIGGINS | DRAWN BY: J. SALVATORI |
| DESIGNED BY: G. LAROCHE | CHECKED BY: G. LAROCHE |
| ABUTMENT 4 | SHEET 113R OF 166 |

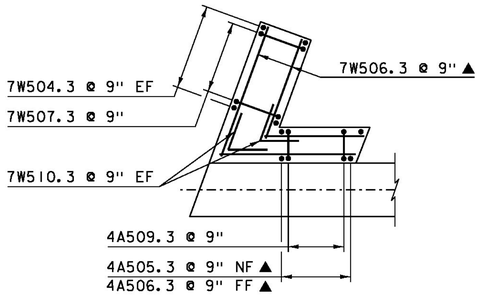


## WINGWALL 7 CORNER DETAIL ABOVE BRIDGE SEAT

SCALE: 1/4" = 1'-0"

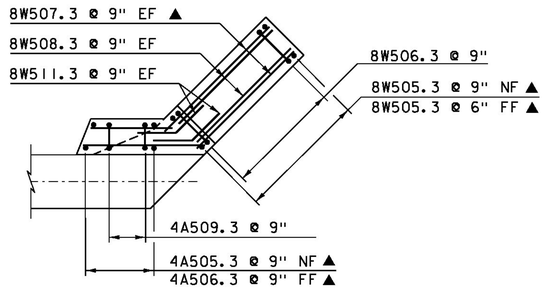


## WINGWALL 8 CORNER DETAIL ABOVE BRIDGE SEAT

SCALE: 1/4" = 1'-0"

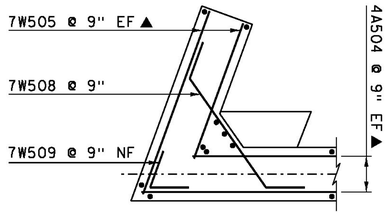


## WINGWALL 7 CORNER DETAIL BELOW BRIDGE SEAT

SCALE: 1/4" = 1'-0"

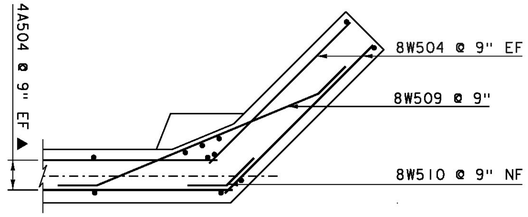


## WINGWALL 8 CORNER DETAIL BELOW BRIDGE SEAT

SCALE: 1/4" = 1'-0"

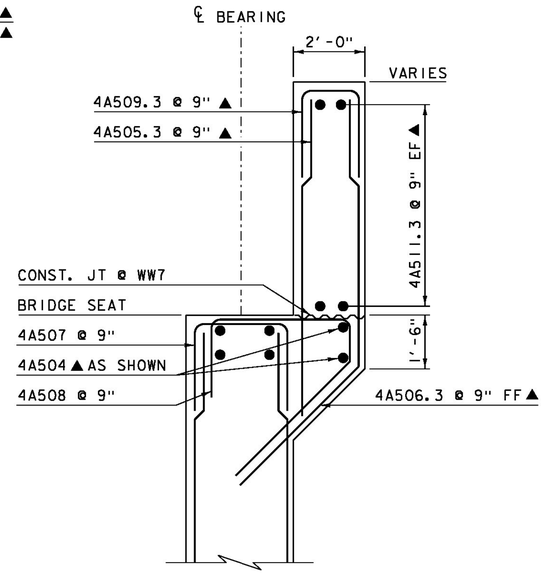


## ABUTMENT 4 CHEEK WALL REINFORCING @ WW 7

SCALE: 1/4" = 1'-0"

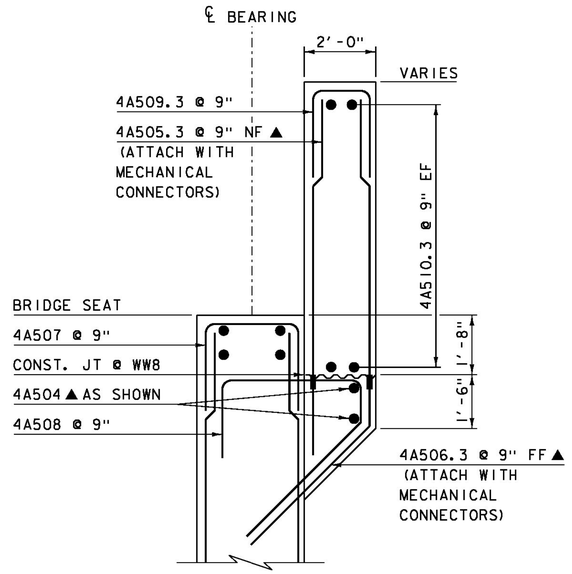


## ABUTMENT 4 CHEEK WALL REINFORCING @ WW 8

SCALE: 1/4" = 1'-0"

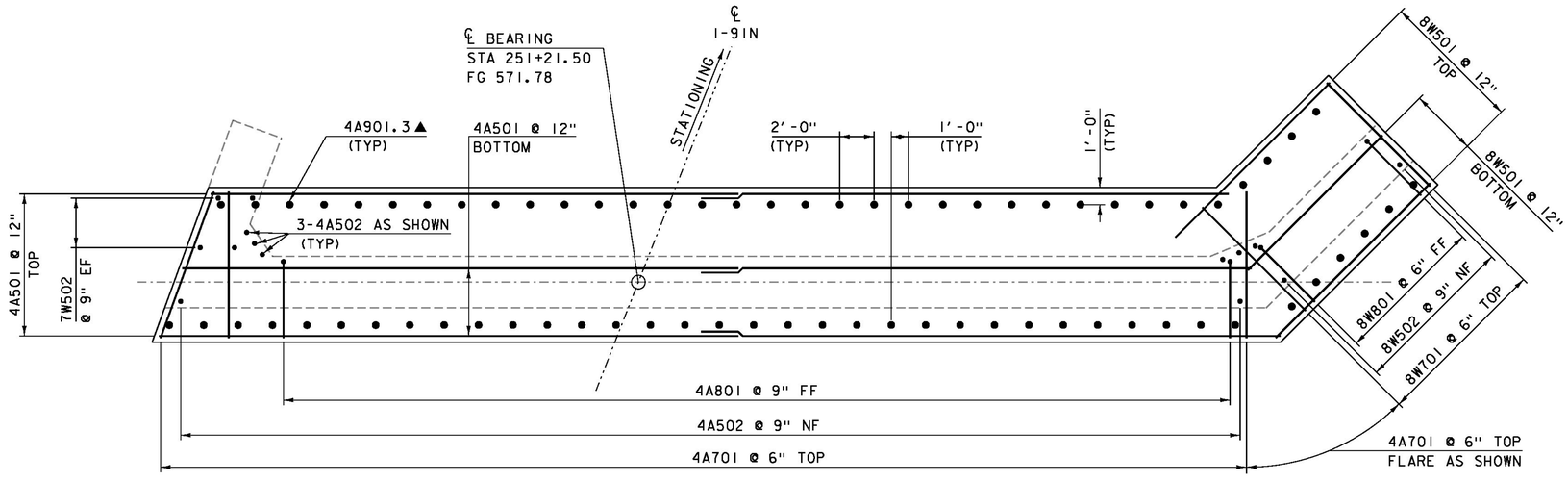


## ABUTMENT 4 FOOTING PLAN

SCALE: 1/4" = 1'-0"

**NOTE:**

NF = NEAR FACE
FF = FAR FACE
EF = EACH FACE
▲ = CUT TO FIT IN FIELD
▬ = MECHANICAL CONNECTOR
3" CLEAR, UNLESS OTHERWISE SPECIFIED ON THE PLANS.
2'-2" LAP FOR #5 BAR
2'-7" LAP FOR #6 BAR
3'-5" LAP FOR #7 BAR
4'-6" LAP FOR #8 BAR

| | |
|---|---|
| PROJECT NAME: | HARTFORD |
| PROJECT NUMBER: | IM 091-2(79) |
| FILE NAME: s12a132sub_ab4 | PLOT DATE: 15-DEC-2014 |
| PROJECT LEADER: K. HIGGINS | DRAWN BY: J. SALVATORI |
| DESIGNED BY: G. LAROCHE | CHECKED BY: G. LAROCHE |
| ABUTMENT 4 FOOTING | SHEET 114 OF 166 |

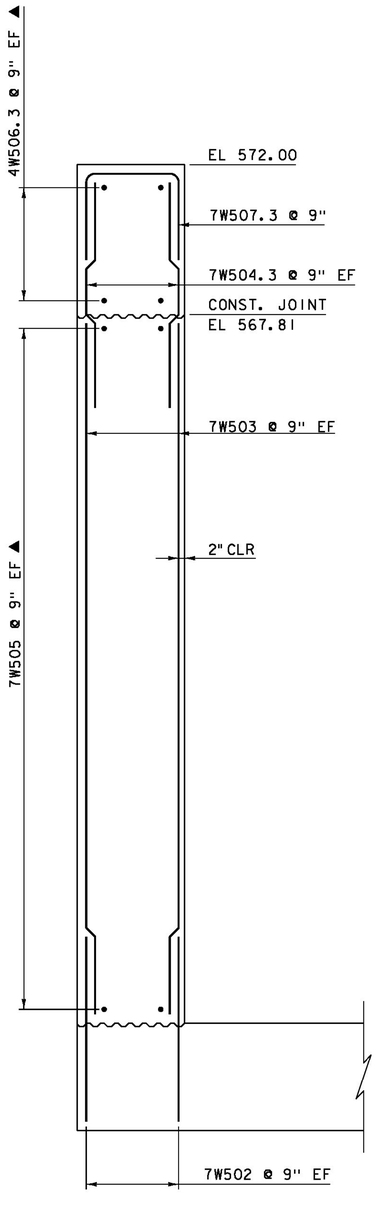


## WINGWALL 7 TYPICAL

SCALE: ½" = 1'-0"

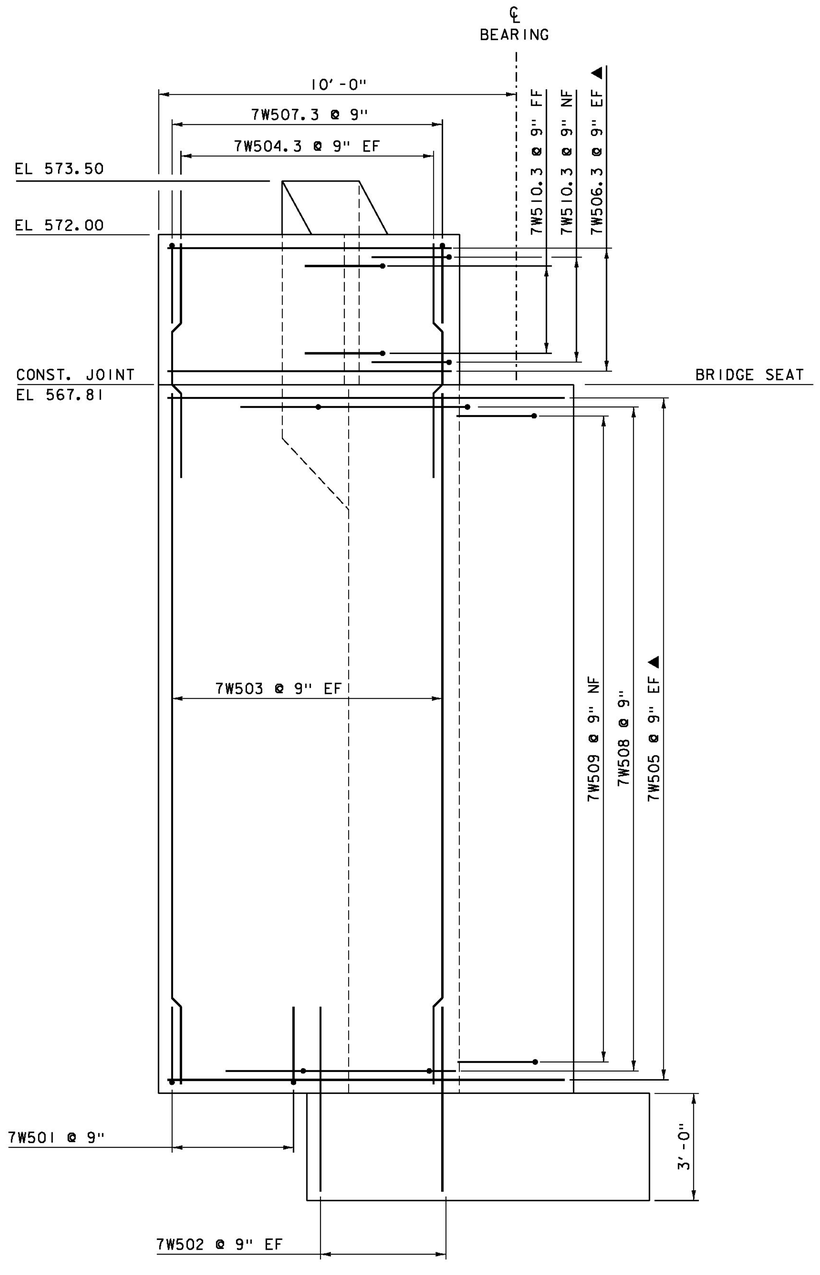


## WINGWALL 7 ELEVATION

SCALE: ½" = 1'-0"

NOTE:

NF = NEAR FACE
FF = FAR FACE
EF = EACH FACE
▲ = CUT TO FIT IN FIELD
▬ = MECHANICAL CONNECTOR
3" CLEAR, UNLESS OTHERWISE SPECIFIED ON THE PLANS.
2'-2" LAP FOR #5 BAR
2'-7" LAP FOR #6 BAR
3'-5" LAP FOR #7 BAR
4'-6" LAP FOR #8 BAR

PROJECT NAME: HARTFORD
PROJECT NUMBER: IM 091-2(79)

FILE NAME: s12a132sub_ab4
PROJECT LEADER: K. HIGGINS
DESIGNED BY: G. LAROCHE
WINGWALL 7 DETAILS

PLOT DATE: 15-DEC-2014
DRAWN BY: J. SALVATORI
CHECKED BY: G. LAROCHE
SHEET 115 OF 166

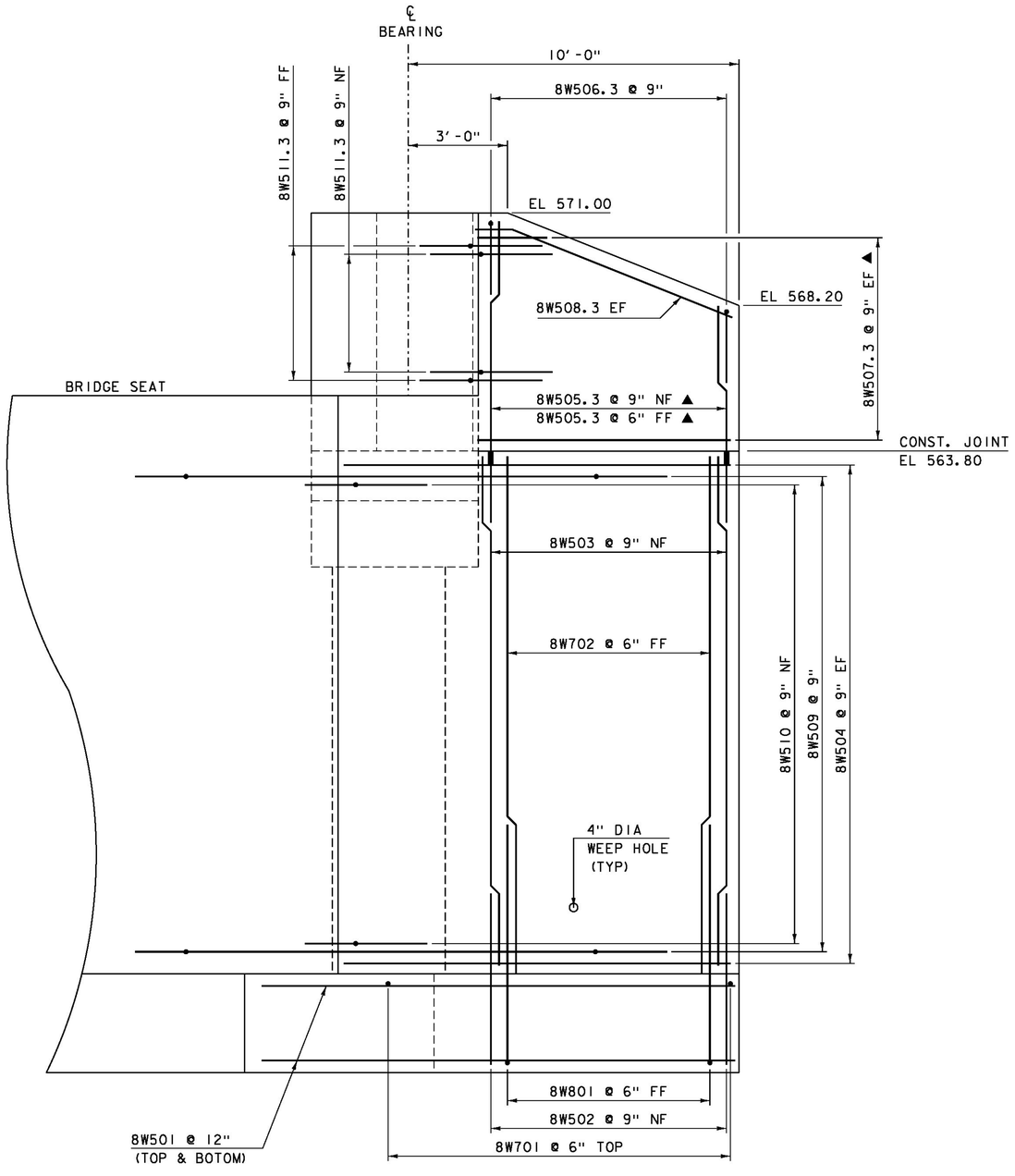


## WINGWALL 8 ELEVATION

SCALE: ½" = 1'-0"

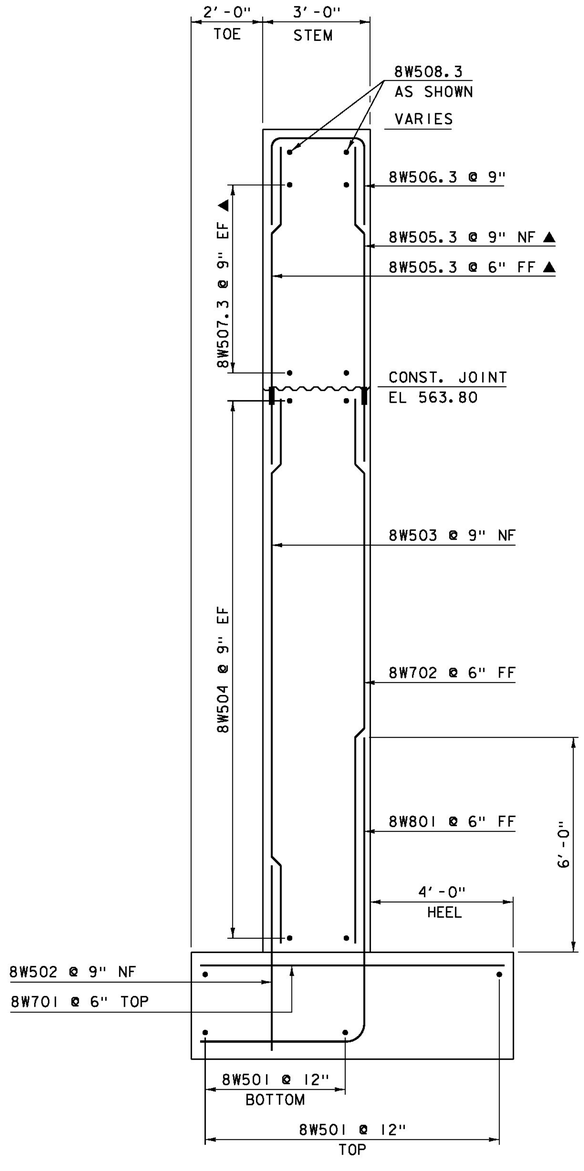


## WINGWALL 8 TYPICAL

SCALE: ½" = 1'-0"

NOTE:

NF = NEAR FACE
FF = FAR FACE
EF = EACH FACE
▲ = CUT TO FIT IN FIELD
▬ = MECHANICAL CONNECTOR
3" CLEAR, UNLESS OTHERWISE SPECIFIED ON THE PLANS.
2'-2" LAP FOR #5 BAR
2'-7" LAP FOR #6 BAR
3'-5" LAP FOR #7 BAR
4'-6" LAP FOR #8 BAR

PROJECT NAME: HARTFORD
PROJECT NUMBER: IM 091-2(79)

FILE NAME: sl2al32sub_ab4
PROJECT LEADER: K. HIGGINS
DESIGNED BY: G. LAROCHE
WINGWALL 8 DETAILS

PLOT DATE: 15-DEC-2014
DRAWN BY: J. SALVATORI
CHECKED BY: G. LAROCHE
SHEET 116 OF 166

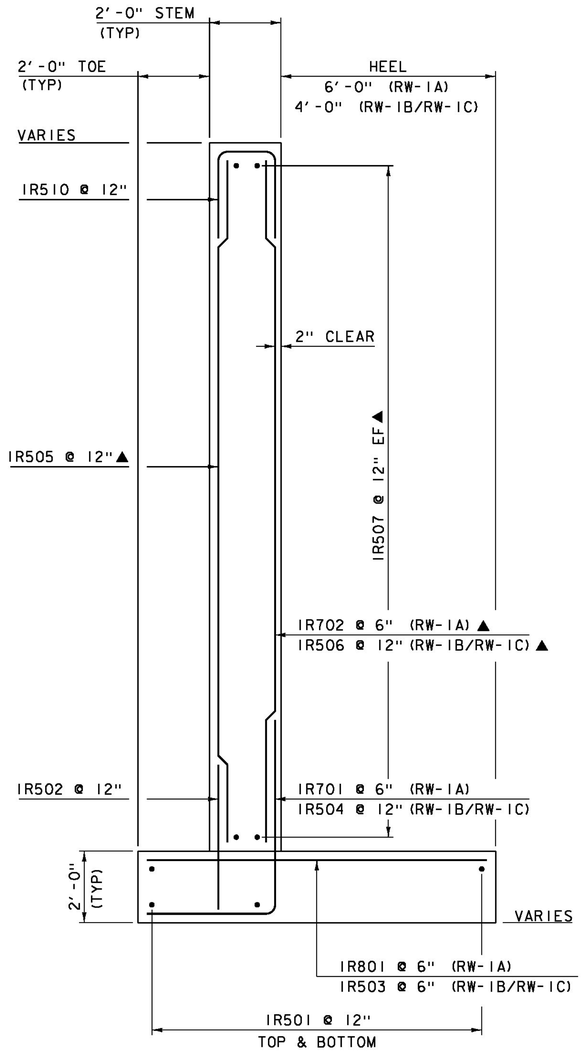


## RETAINING WALL #1 TYPICAL

SCALE ½ = 1'-0"

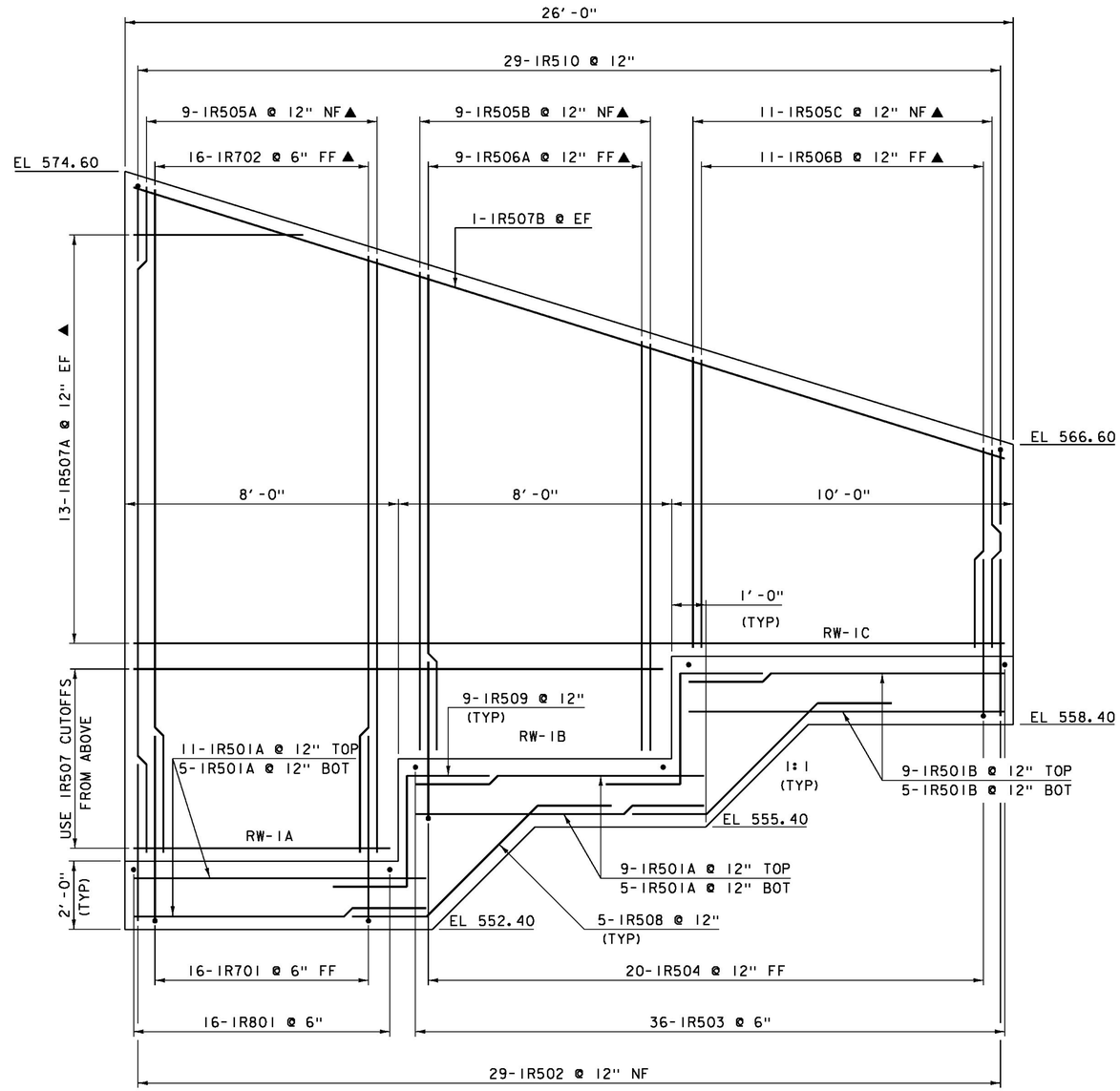


## RETAINING WALL #1 ELEVATION

SCALE ½"= 1'-0"

### NOTE:

NF = NEAR FACE
FF = FAR FACE
EF = EACH FACE
▲ = CUT TO FIT IN FIELD
3" CLEAR, UNLESS OTHERWISE SPECIFIED ON THE PLANS.
2'-2" LAP FOR #5 BAR
2'-7" LAP FOR #6 BAR
3'-5" LAP FOR #7 BAR
4'-6" LAP FOR #8 BAR

PROJECT NAME: HARTFORD
PROJECT NUMBER: IM 091-2(79)

FILE NAME: sl2al32retwall.dgn
PROJECT LEADER: K. HIGGINS
DESIGNED BY: G. LAROCHE
RETAINING WALL #1

PLOT DATE: 15-DEC-2014
DRAWN BY: J. SALVATORI
CHECKED BY: J. GRIGAS
SHEET 117 OF 166

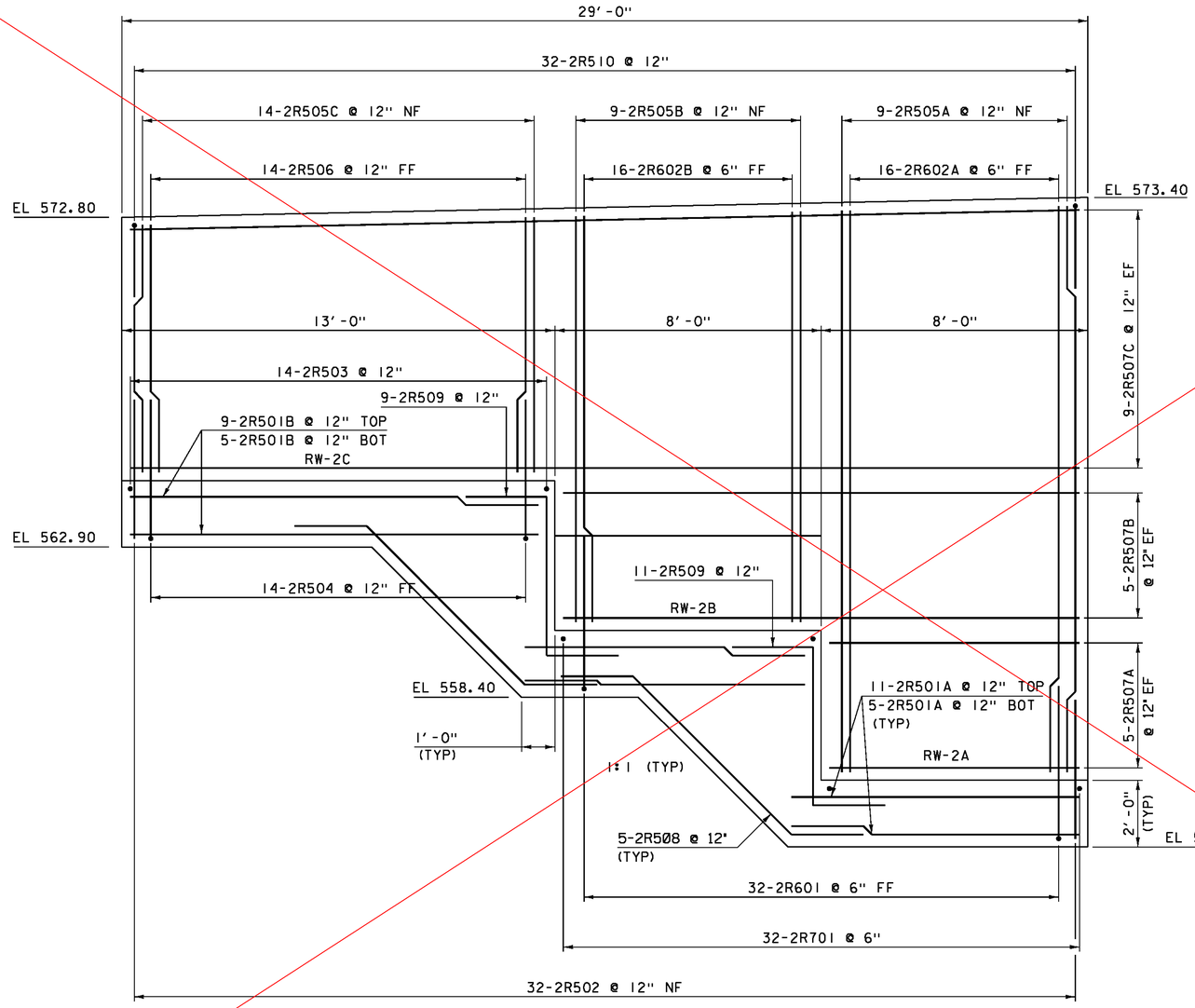


RETAINING WALL #2 ELEVATION

SCALE 1/2 =1'-0"

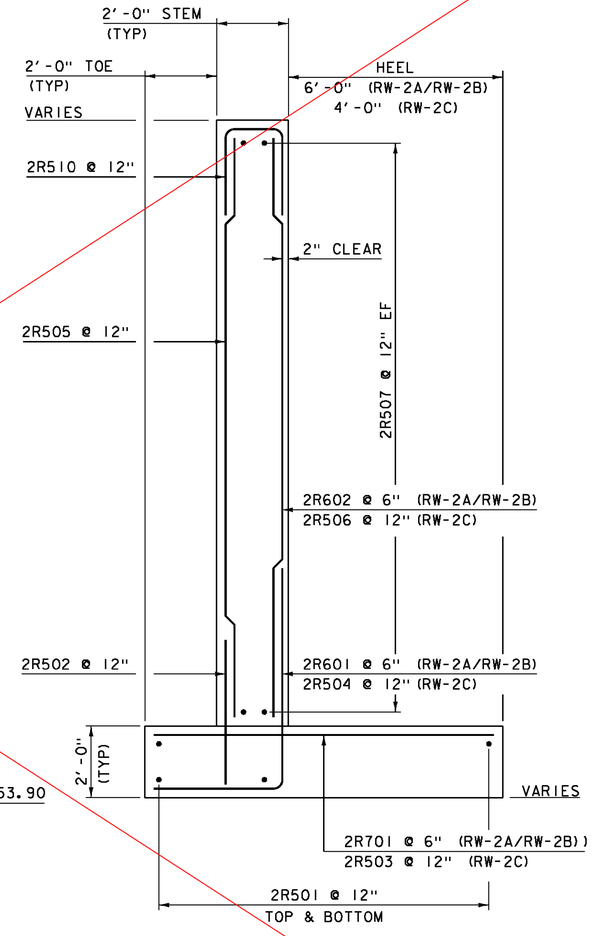


RETAINING WALL #2 TYPICAL

SCALE 1/2 =1'-0"

SEE SHEET 118-R

NOTE:

NF = NEAR FACE
FF = FAR FACE
EF = EACH FACE
▲ = CUT TO FIT IN FIELD
3" CLEAR, UNLESS OTHERWISE SPECIFIED ON THE PLANS.
2'-2" LAP FOR #5 BAR
2'-7" LAP FOR #6 BAR
3'-5" LAP FOR #7 BAR
4'-6" LAP FOR #8 BAR

PROJECT NAME: HARTFORD
PROJECT NUMBER: IM 091-2(79)

FILE NAME: sl2al32retwall.dgn
PROJECT LEADER: K. HIGGINS
DESIGNED BY: G. LAROCHE
RETAINING WALL #2

PLOT DATE: 15-DEC-2014
DRAWN BY: J. SALVATORI
CHECKED BY: J. GRIGAS
SHEET 118 OF 166

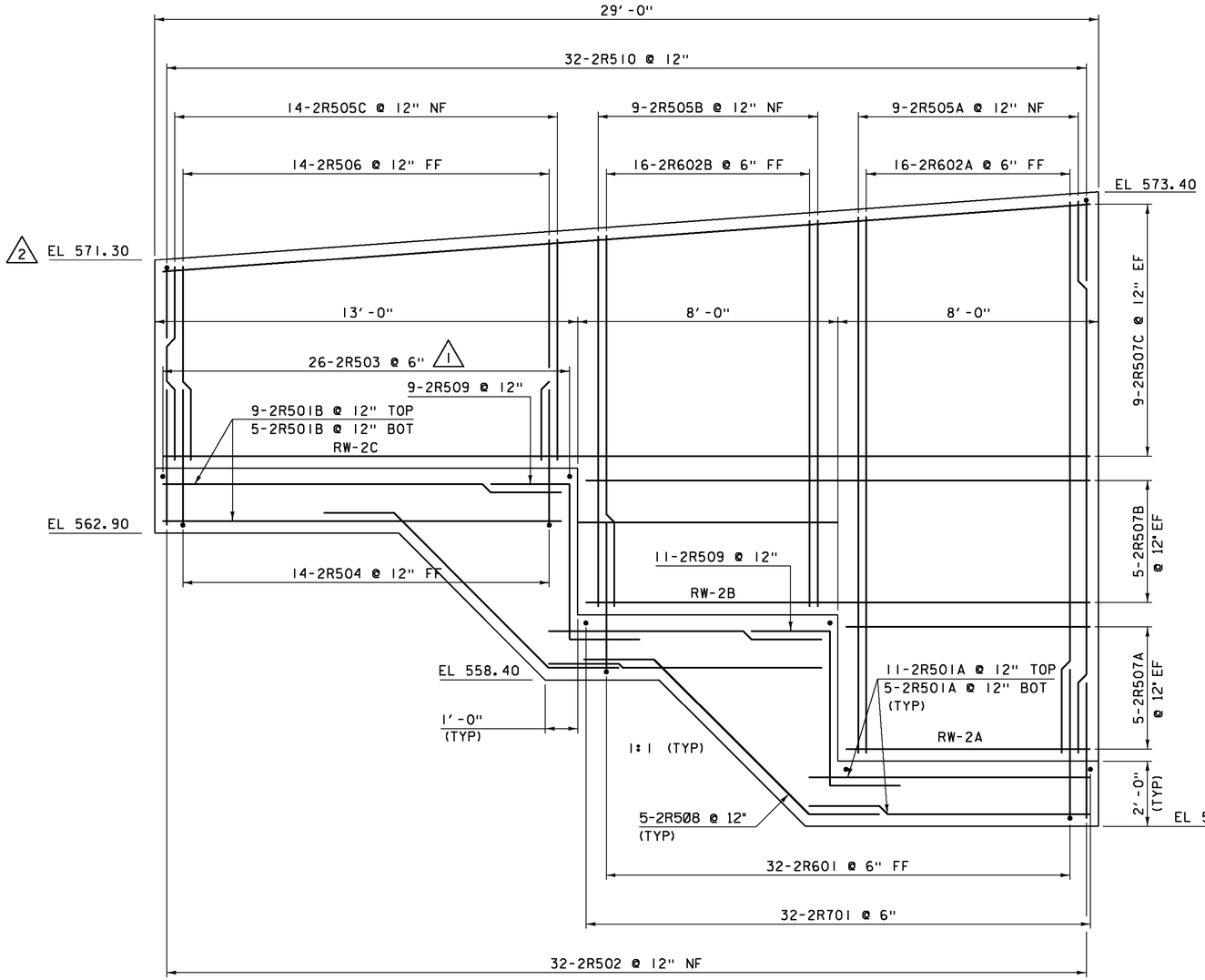


## RETAINING WALL #2 ELEVATION

SCALE 1/2 = 1'-0"

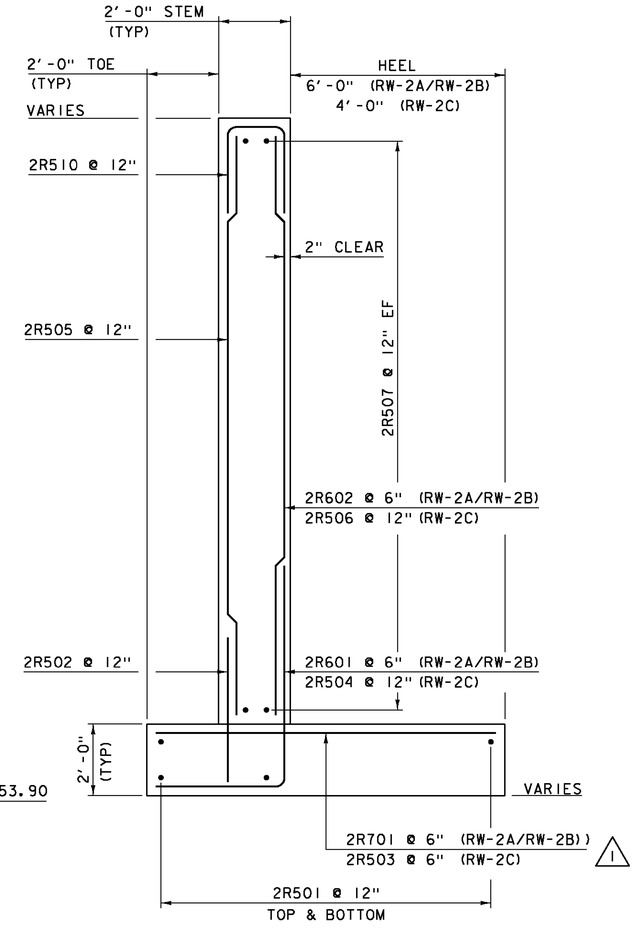


## RETAINING WALL #2 TYPICAL

SCALE 1/2 = 1'-0"

| REVISION | DATE | DESCRIPTION | BY |
|---|---|---|---|
| 1 | 03-02-2015 | UPDATED SPACING AND NUMBER OF 2R503 BARS | JS |
| 2 | 04-28-2015 | REVISED END ELEVATION | JS |

**NOTE:**

NF = NEAR FACE
FF = FAR FACE
EF = EACH FACE
▲ = CUT TO FIT IN FIELD
3" CLEAR, UNLESS OTHERWISE SPECIFIED ON THE PLANS.
2'-2" LAP FOR #5 BAR
2'-7" LAP FOR #6 BAR
3'-5" LAP FOR #7 BAR
4'-6" LAP FOR #8 BAR

PROJECT NAME: HARTFORD
PROJECT NUMBER: IM 091-2(79)

FILE NAME: si2al32retwall.dgn
PROJECT LEADER: K. HIGGINS
DESIGNED BY: G. LAROCHE
RETAINING WALL #2

PLOT DATE: 28-APR-2015
DRAWN BY: J. SALVATORI
CHECKED BY: J. GRIGAS
SHEET 118R OF 166

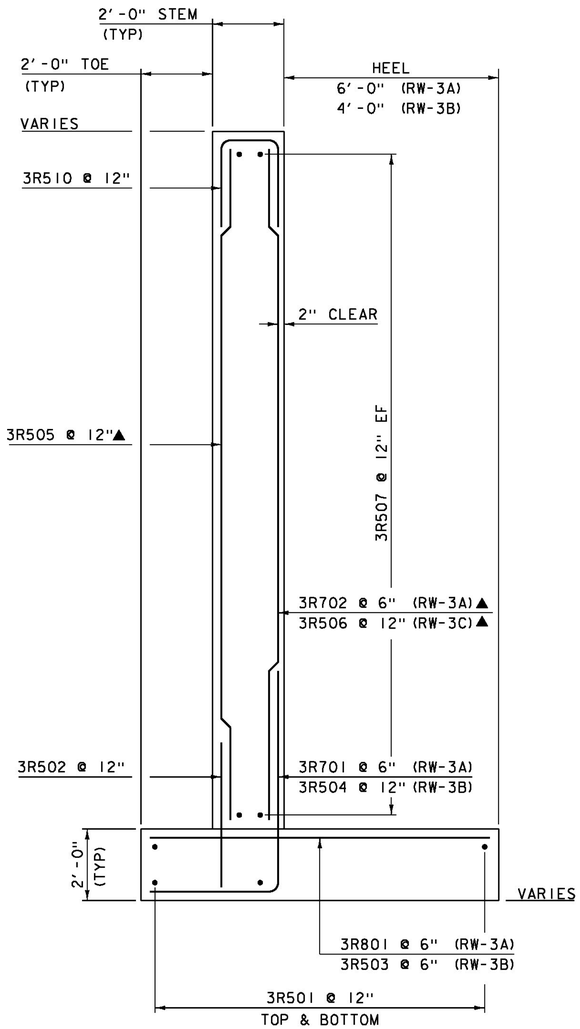


## RETAINING WALL #3 TYPICAL

SCALE ½ = 1'-0"

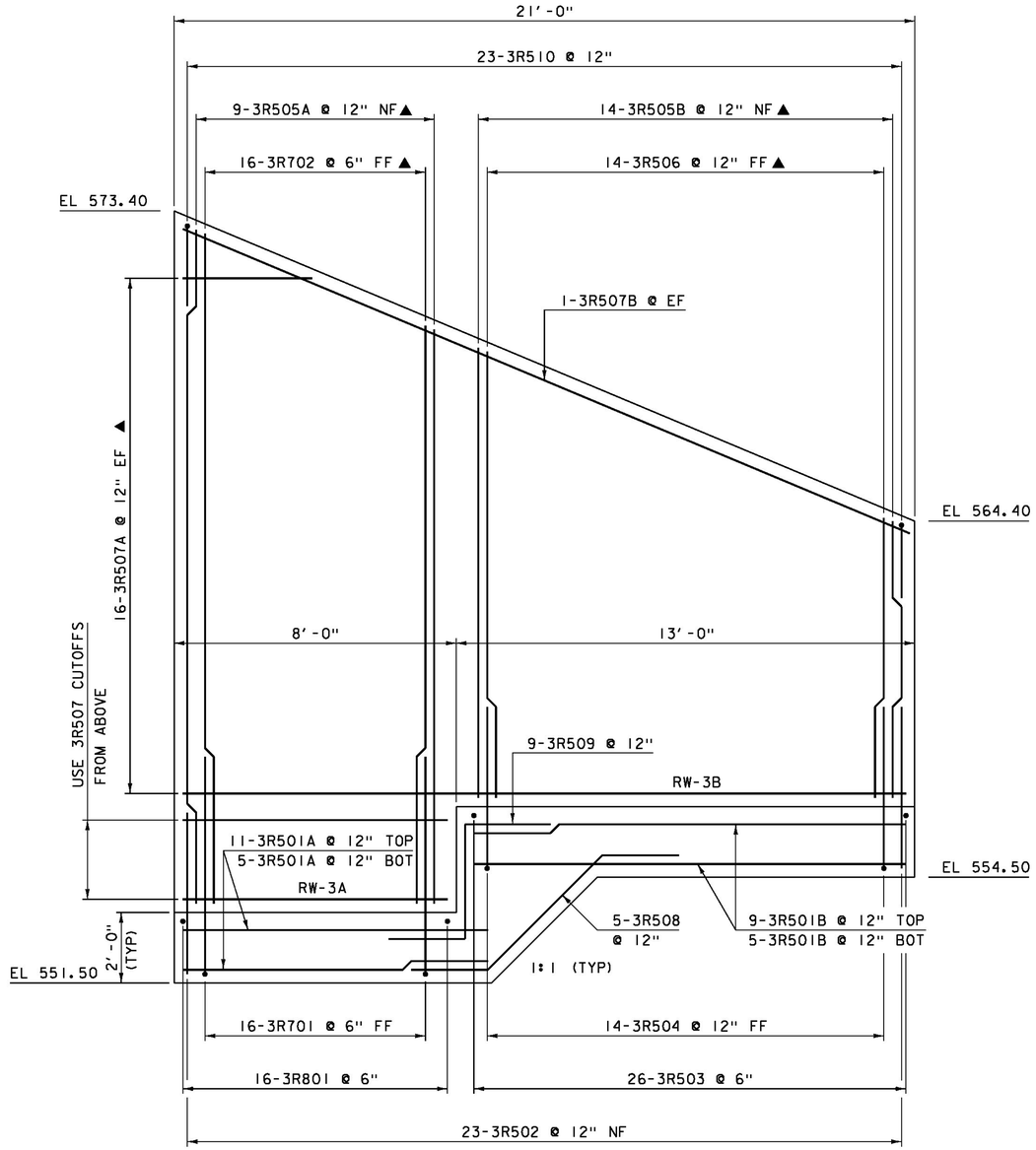


## RETAINING WALL #3 ELEVATION

SCALE ½ = 1'-0"

### NOTE:

NF = NEAR FACE
FF = FAR FACE
EF = EACH FACE
▲ = CUT TO FIT IN FIELD
3" CLEAR, UNLESS OTHERWISE SPECIFIED ON THE PLANS.
2'-2" LAP FOR #5 BAR
2'-7" LAP FOR #6 BAR
3'-5" LAP FOR #7 BAR
4'-6" LAP FOR #8 BAR

| | |
|---|---|
| PROJECT NAME: | HARTFORD |
| PROJECT NUMBER: | IM 091-2(79) |
| FILE NAME: sl2al32retwall.dgn | PLOT DATE: 15-DEC-2014 |
| PROJECT LEADER: K. HIGGINS | DRAWN BY: J. SALVATORI |
| DESIGNED BY: G. LAROCHE | CHECKED BY: J. GRIGAS |
| RETAINING WALL #3 | SHEET 119 OF 166 |

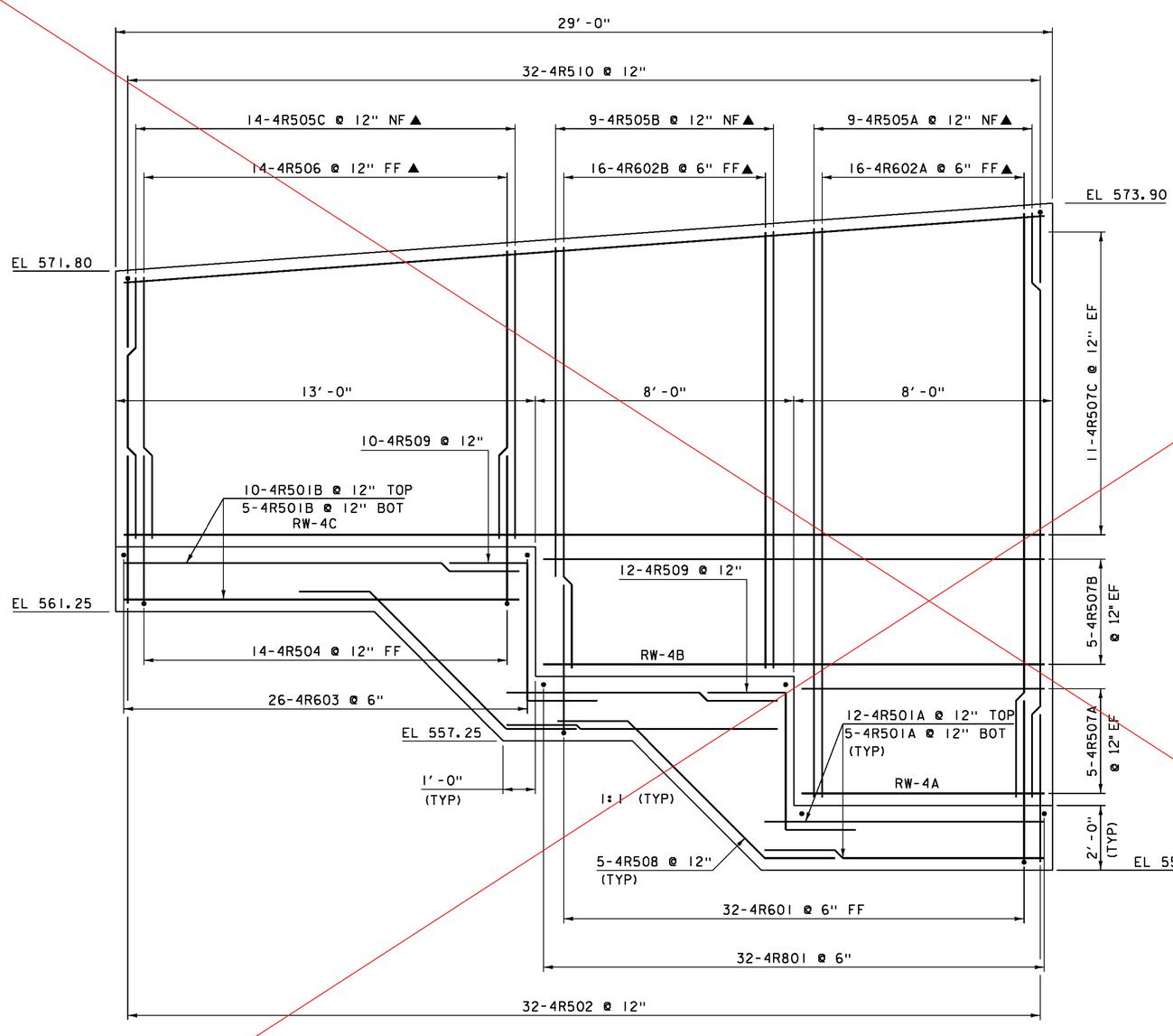


## RETAINING WALL #4 ELEVATION

SCALE ½ = 1'-0"

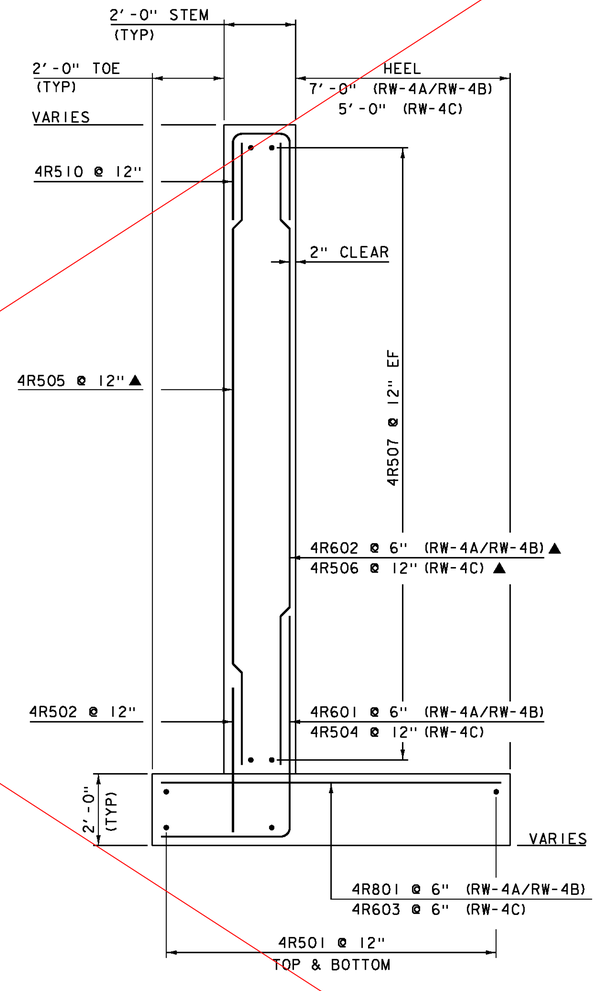


## RETAINING WALL #4 TYPICAL

SCALE ½ = 1'-0"

**NOTE:**

NF = NEAR FACE
FF = FAR FACE
EF = EACH FACE
▲ = CUT TO FIT IN FIELD
3" CLEAR, UNLESS OTHERWISE SPECIFIED ON THE PLANS.
2'-2" LAP FOR #5 BAR
2'-7" LAP FOR #6 BAR
3'-5" LAP FOR #7 BAR
4'-6" LAP FOR #8 BAR

SEE SHEET 120-R

| | |
|---|---|
| PROJECT NAME: | HARTFORD |
| PROJECT NUMBER: | IM 091-2(79) |
| FILE NAME: sl2al32retwall.dgn | PLOT DATE: 15-DEC-2014 |
| PROJECT LEADER: K. HIGGINS | DRAWN BY: J. SALVATORI |
| DESIGNED BY: G. LAROCHE | CHECKED BY: J. GRIGAS |
| RETAINING WALL #4 | SHEET 120 OF 166 |

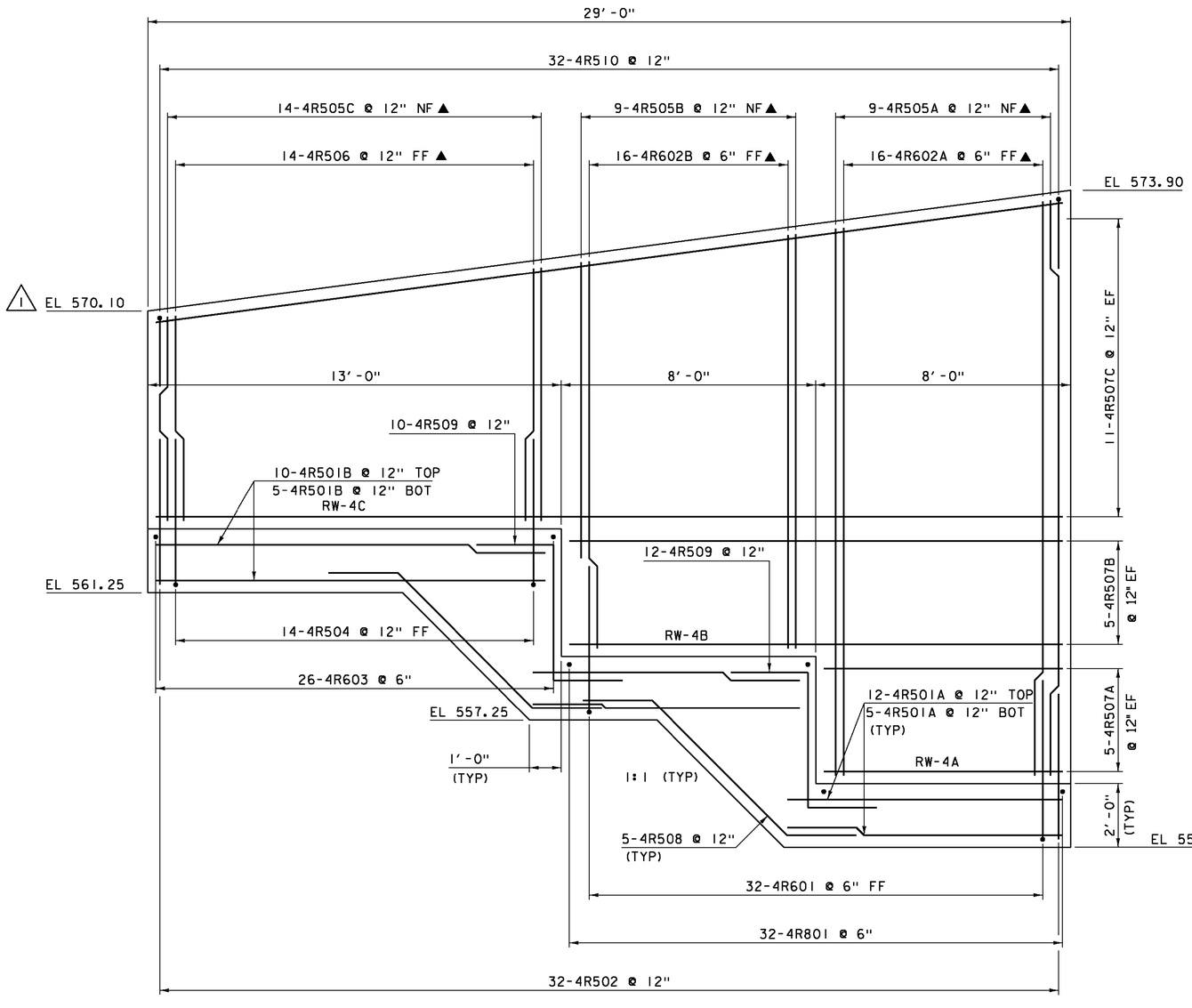


## RETAINING WALL #4 ELEVATION

SCALE ½ = 1'-0"

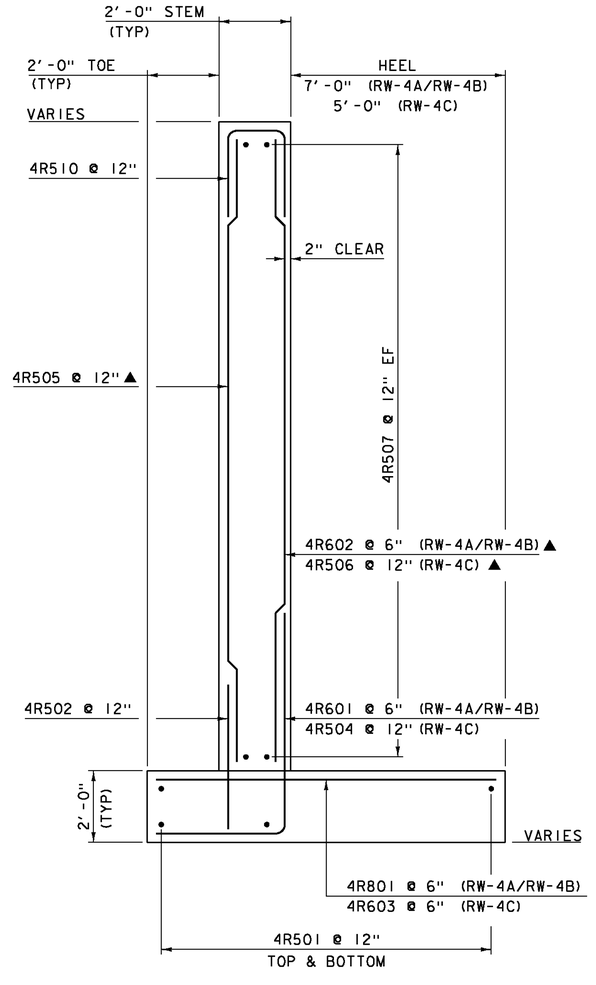


## RETAINING WALL #4 TYPICAL

SCALE ½ = 1'-0"

| REVISION | DATE | DESCRIPTION | BY |
|---|---|---|---|
| 1 | 04-23-2015 | REVISED END ELEVATION | JS |

### NOTE:

NF = NEAR FACE
FF = FAR FACE
EF = EACH FACE
▲ = CUT TO FIT IN FIELD
3" CLEAR, UNLESS OTHERWISE SPECIFIED ON THE PLANS.
2'-2" LAP FOR #5 BAR
2'-7" LAP FOR #6 BAR
3'-5" LAP FOR #7 BAR
4'-6" LAP FOR #8 BAR

PROJECT NAME: HARTFORD
PROJECT NUMBER: IM 091-2(79)

FILE NAME: sl2al32retwall.dgn
PROJECT LEADER: K. HIGGINS
DESIGNED BY: G. LAROCHE
RETAINING WALL #4

PLOT DATE: 23-APR-2015
DRAWN BY: J. SALVATORI
CHECKED BY: J. GRIGAS
SHEET 120R OF 166

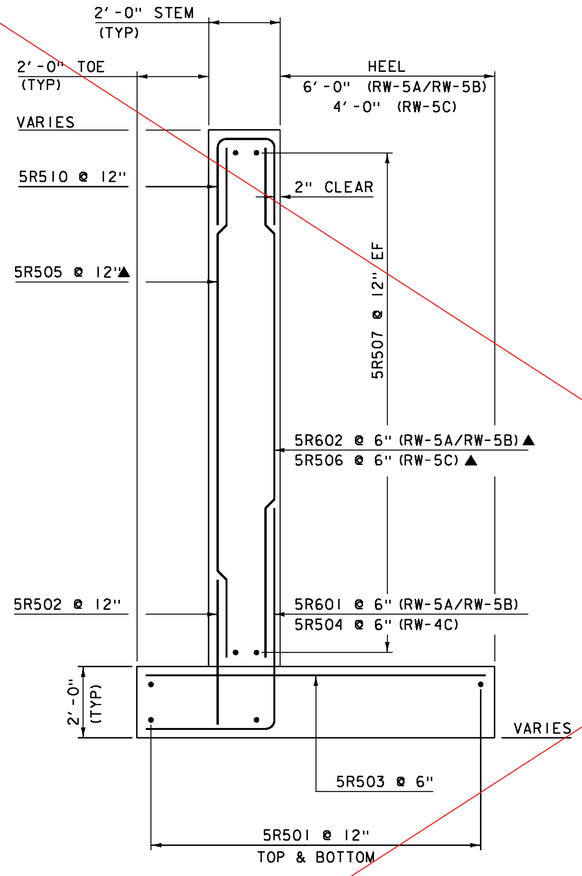


RETAINING WALL #5 TYPICAL

SCALE ½ = 1'-0"

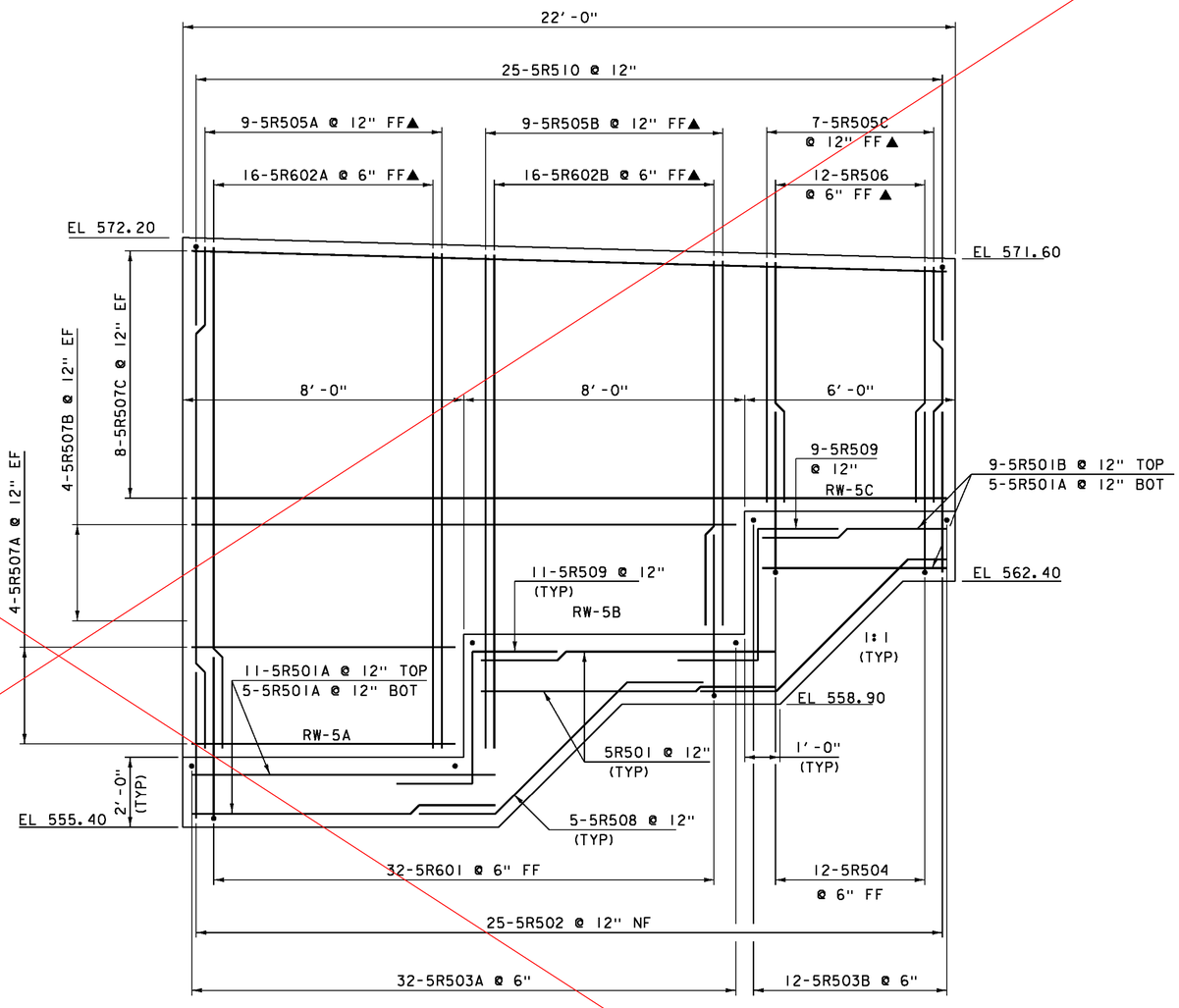


RETAINING WALL #5 ELEVATION

SCALE ½ = 1'-0"

SEE SHEET 121-R

NOTE:

NF = NEAR FACE
FF = FAR FACE
EF = EACH FACE
▲ = CUT TO FIT IN FIELD
3" CLEAR, UNLESS OTHERWISE SPECIFIED ON THE PLANS.
2'-2" LAP FOR #5 BAR
2'-7" LAP FOR #6 BAR
3'-5" LAP FOR #7 BAR
4'-6" LAP FOR #8 BAR

PROJECT NAME: HARTFORD
PROJECT NUMBER: IM 091-2(79)

FILE NAME: sl2al32retwall.dgn
PROJECT LEADER: K. HIGGINS
DESIGNED BY: G. LAROCHE
RETAINING WALL #5

PLOT DATE: 15-DEC-2014
DRAWN BY: J. SALVATORI
CHECKED BY: J. GRIGAS
SHEET 121 OF 166

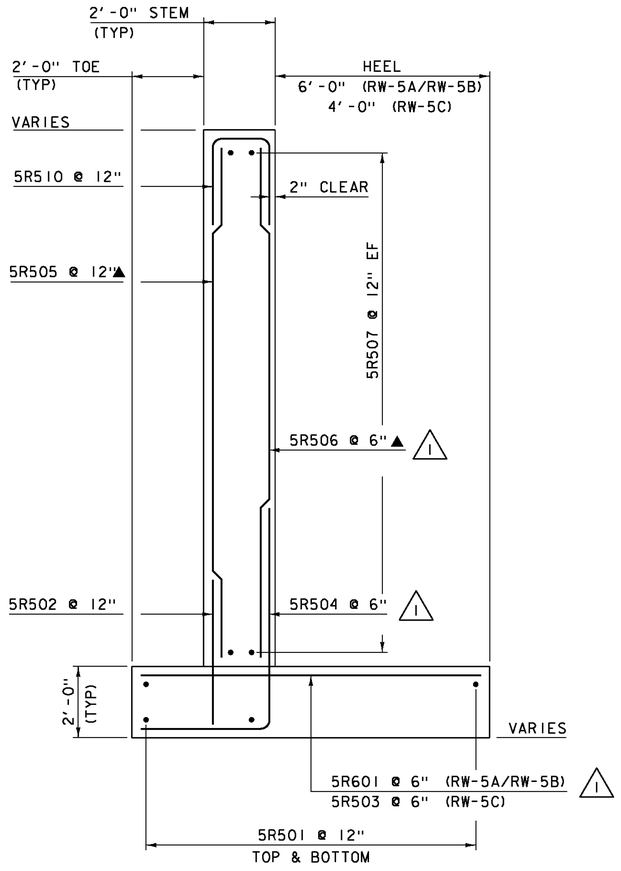


## RETAINING WALL #5 TYPICAL

SCALE ½ = 1'-0"

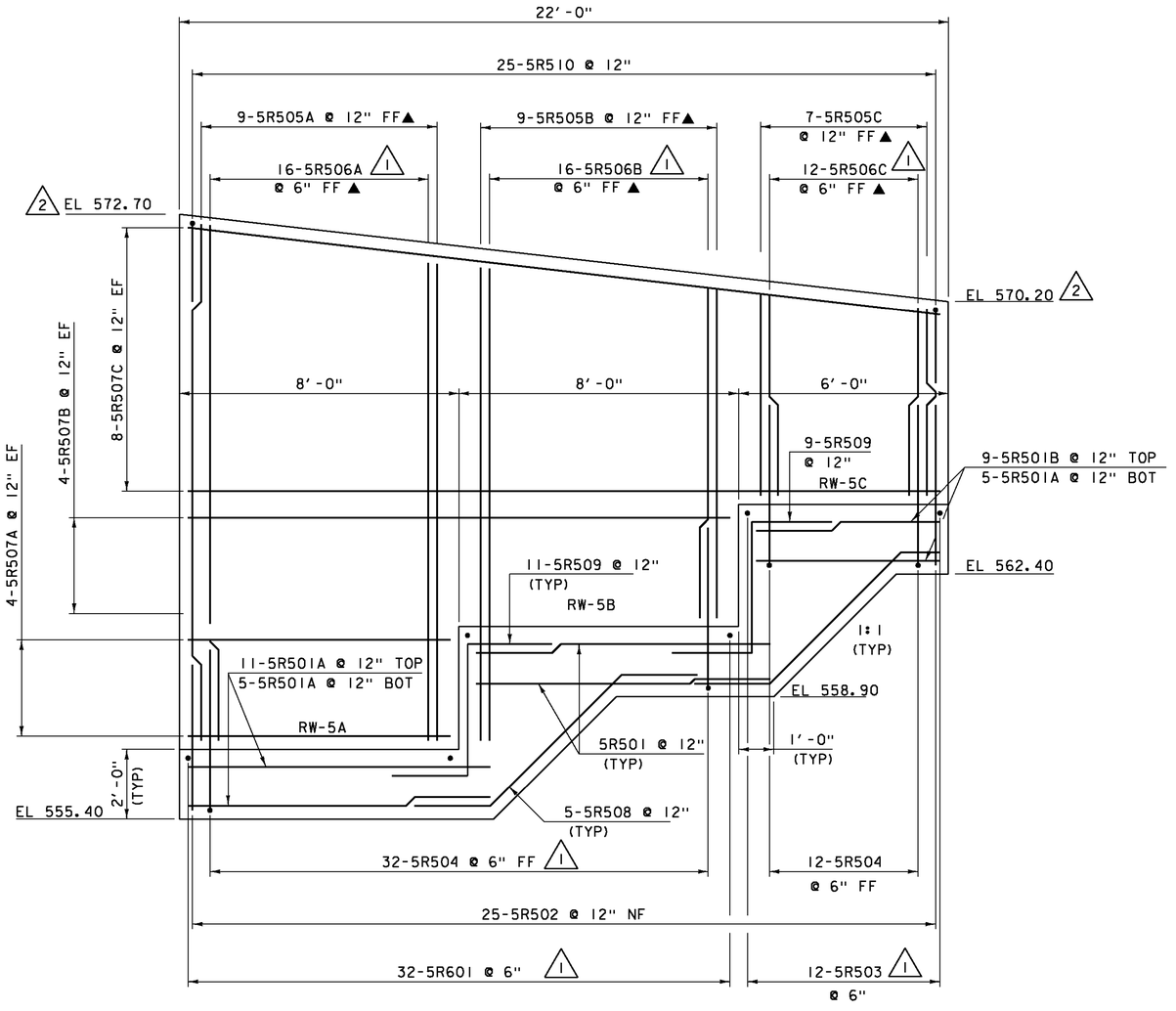


## RETAINING WALL #5 ELEVATION

SCALE ½ = 1'-0"

| REVISION | DATE | DESCRIPTION | BY |
|---|---|---|---|
| 1 | 03-05-2015 | BAR CHANGES PER DESIGN | JS |
| 2 | 04-28-2015 | REVISED END ELEVATION | JS |

**NOTE:**

NF = NEAR FACE
FF = FAR FACE
EF = EACH FACE
▲ = CUT TO FIT IN FIELD
3" CLEAR, UNLESS OTHERWISE SPECIFIED ON THE PLANS.
2'-2" LAP FOR #5 BAR
2'-7" LAP FOR #6 BAR
3'-5" LAP FOR #7 BAR
4'-6" LAP FOR #8 BAR

PROJECT NAME: HARTFORD
PROJECT NUMBER: IM 091-2(79)

FILE NAME: sl2al32retwall.dgn
PROJECT LEADER: K. HIGGINS
DESIGNED BY: G. LAROCHE
RETAINING WALL #5

PLOT DATE: 28-APR-2015
DRAWN BY: J. SALVATORI
CHECKED BY: J. GRIGAS
SHEET 121R OF 166

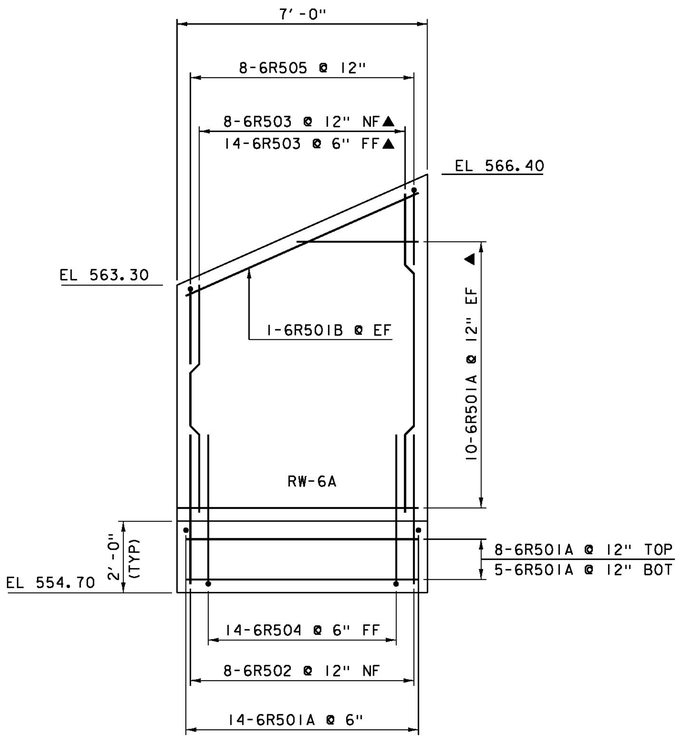


RETAINING WALL #6 TYPICAL

SCALE ½ =1'-0"

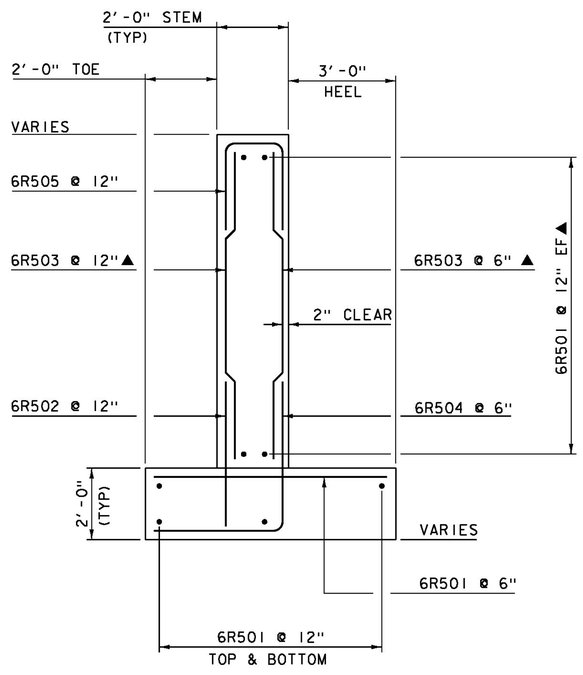


RETAINING WALL #6 TYPICAL

SCALE ½ =1'-0"

NOTE:

NF = NEAR FACE
FF = FAR FACE
EF = EACH FACE
▲ = CUT TO FIT IN FIELD
3" CLEAR, UNLESS OTHERWISE SPECIFIED ON THE PLANS.
2'-2" LAP FOR #5 BAR
2'-7" LAP FOR #6 BAR
3'-5" LAP FOR #7 BAR
4'-6" LAP FOR #8 BAR

| | |
|---|---|
| PROJECT NAME: HARTFORD | |
| PROJECT NUMBER: IM 091-2(79) | |
| FILE NAME: sl2al32retwall.dgn | PLOT DATE: 15-DEC-2014 |
| PROJECT LEADER: K. HIGGINS | DRAWN BY: J. SALVATORI |
| DESIGNED BY: G. LAROCHE | CHECKED BY: J. GRIGAS |
| RETAINING WALL #6 | SHEET 122 OF 166 |

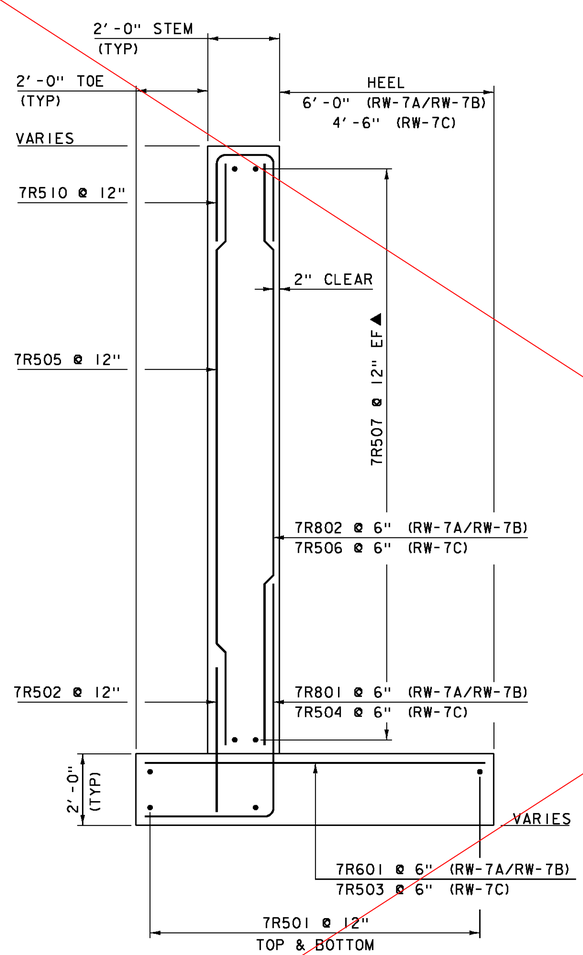


## RETAINING WALL #7 TYPICAL

SCALE ½ =1'-0"

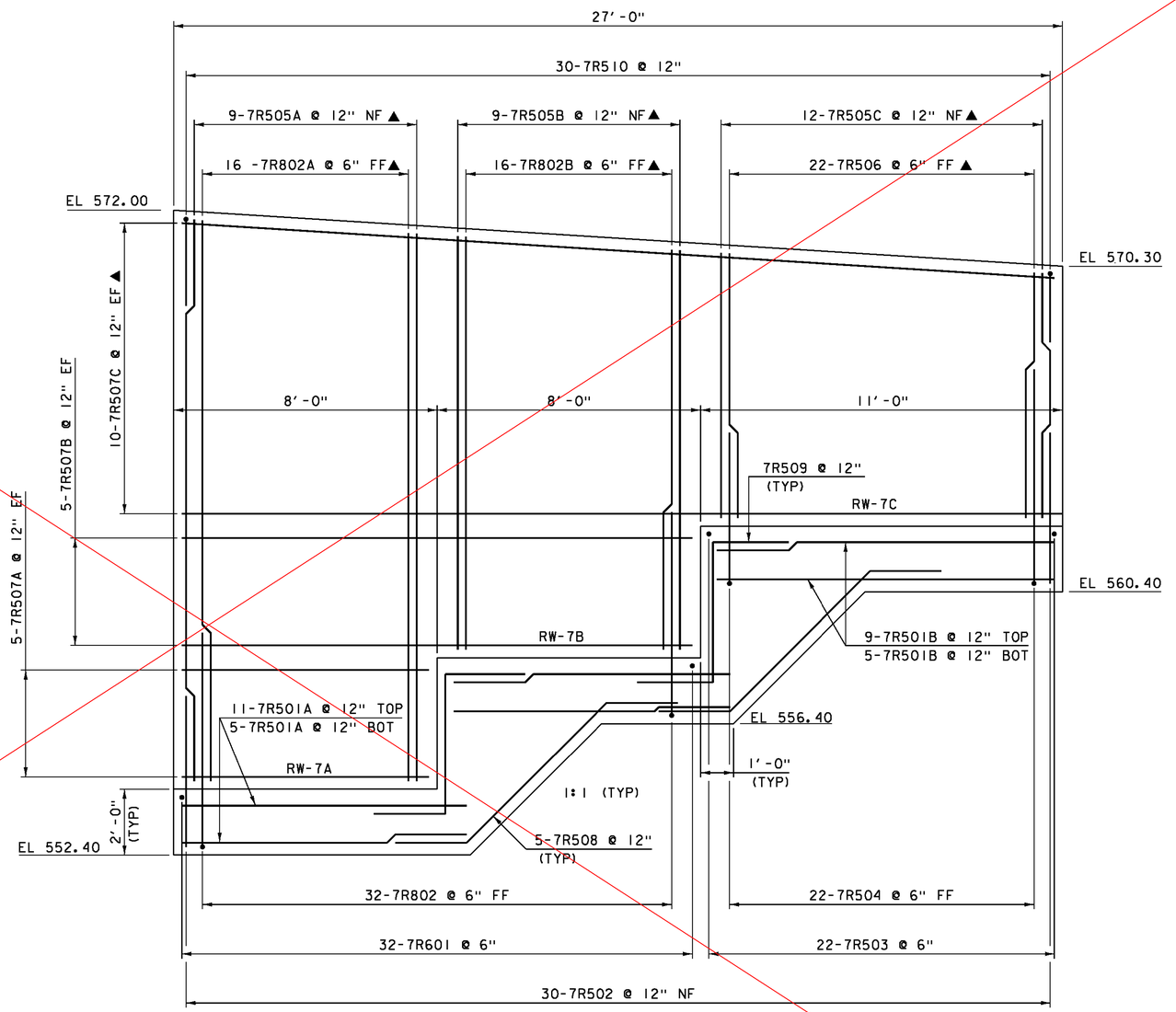


## RETAINING WALL #7 ELEVATION

SCALE ½ =1'-0"

SEE SHEET 123-R

NOTE:

NF = NEAR FACE
FF = FAR FACE
EF = EACH FACE
▲ = CUT TO FIT IN FIELD
3" CLEAR, UNLESS OTHERWISE SPECIFIED ON THE PLANS.
2'-2" LAP FOR #5 BAR
2'-7" LAP FOR #6 BAR
3'-5" LAP FOR #7 BAR
4'-6" LAP FOR #8 BAR

| | |
|---|---|
| PROJECT NAME: | HARTFORD |
| PROJECT NUMBER: | IM 091-2(79) |
| FILE NAME: sl2al32retwall.dgn | PLOT DATE: 15-DEC-2014 |
| PROJECT LEADER: K. HIGGINS | DRAWN BY: J. SALVATORI |
| DESIGNED BY: G. LAROCHE | CHECKED BY: J. GRIGAS |
| RETAINING WALL #7 | SHEET 123 OF 166 |

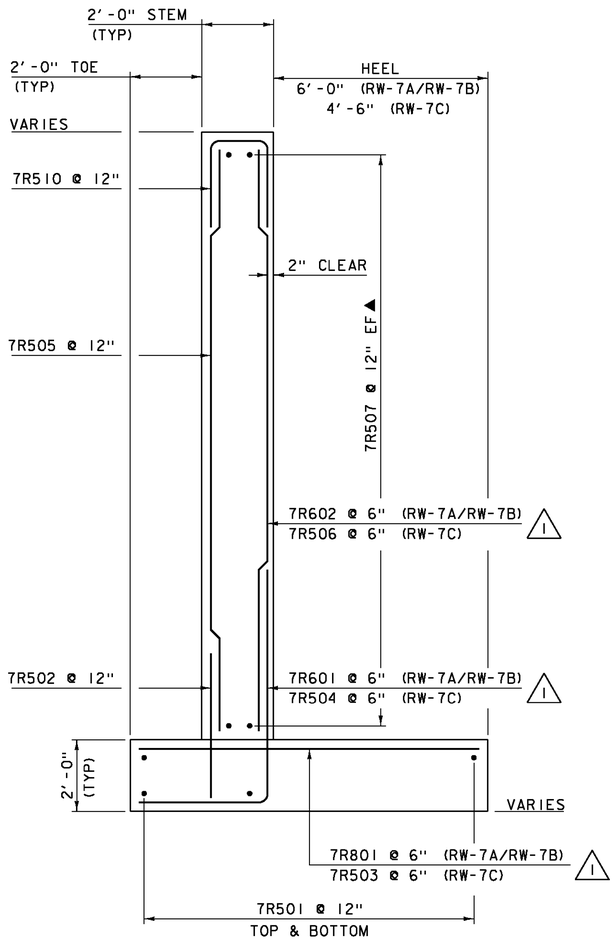


## RETAINING WALL #7 TYPICAL

SCALE ½ =1'-0"

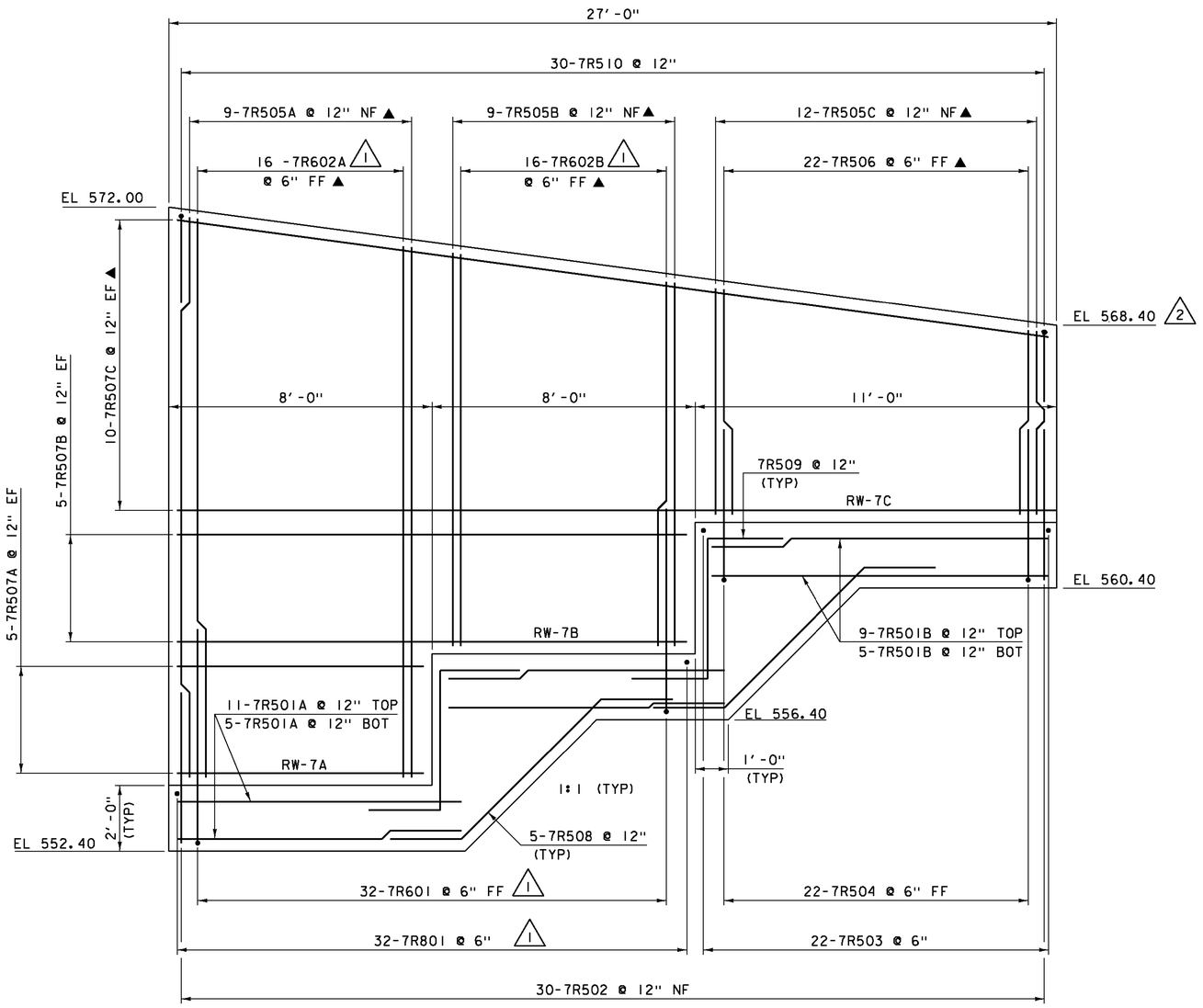


## RETAINING WALL #7 ELEVATION

SCALE ½ =1'-0"

### NOTE:

NF = NEAR FACE
FF = FAR FACE
EF = EACH FACE
▲ = CUT TO FIT IN FIELD
3" CLEAR, UNLESS OTHERWISE SPECIFIED ON THE PLANS.
2'-2" LAP FOR #5 BAR
2'-7" LAP FOR #6 BAR
3'-5" LAP FOR #7 BAR
4'-6" LAP FOR #8 BAR

| REVISION | DATE | DESCRIPTION | BY |
|---|---|---|---|
| 1 | 03-05-2015 | BAR CHANGES PER DESIGN | JS |
| 2 | 04-23-2015 | REVISED END ELEVATION | JS |

PROJECT NAME: HARTFORD
PROJECT NUMBER: IM 091-2(79)

FILE NAME: sl2al32retwall.dgn
PROJECT LEADER: K. HIGGINS
DESIGNED BY: G. LAROCHE
RETAINING WALL #7

PLOT DATE: 23-APR-2015
DRAWN BY: J. SALVATORI
CHECKED BY: J. GRIGAS
SHEET 123R OF 166

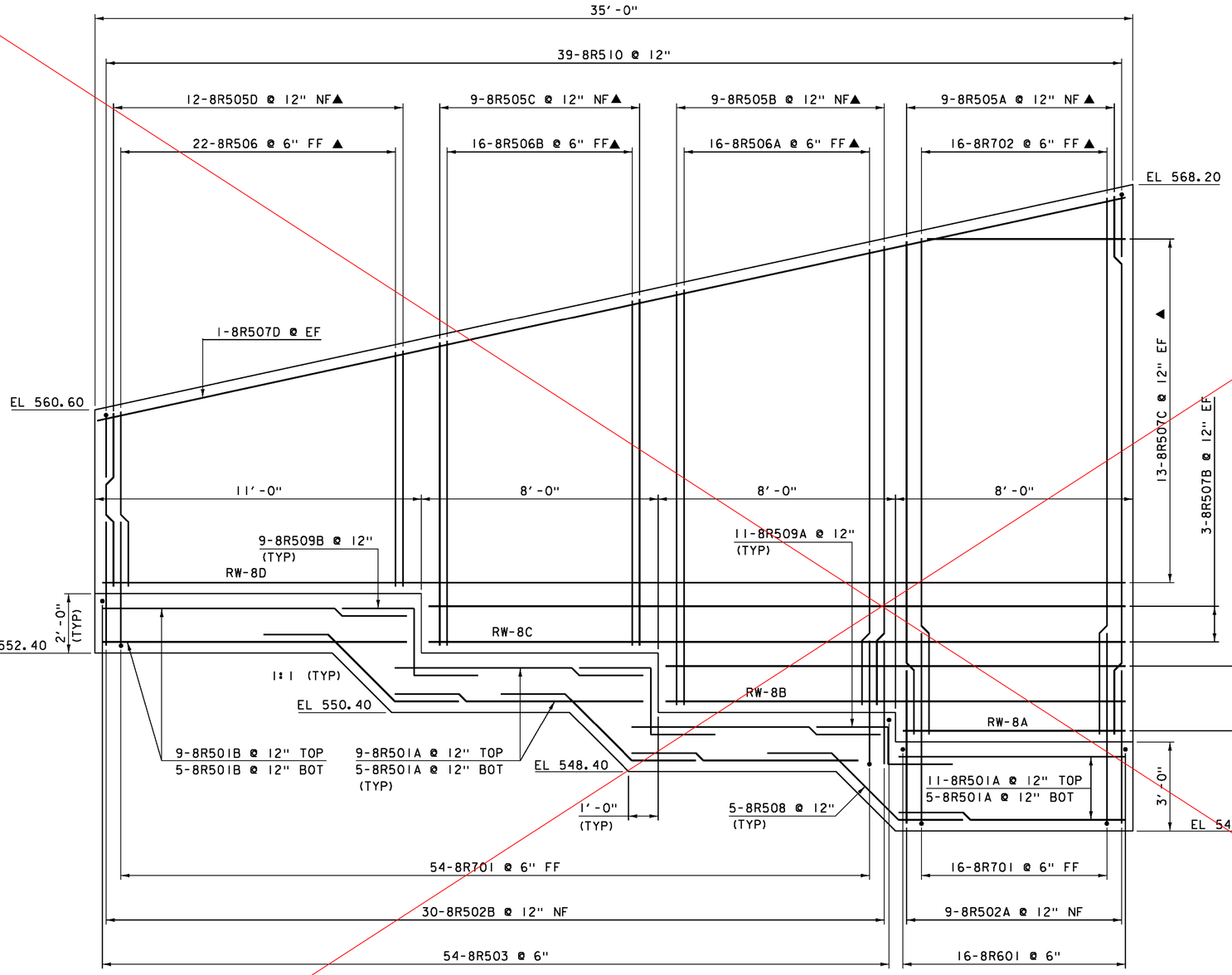


## RETAINING WALL #8 ELEVATION

SCALE ½ = 1'-0"

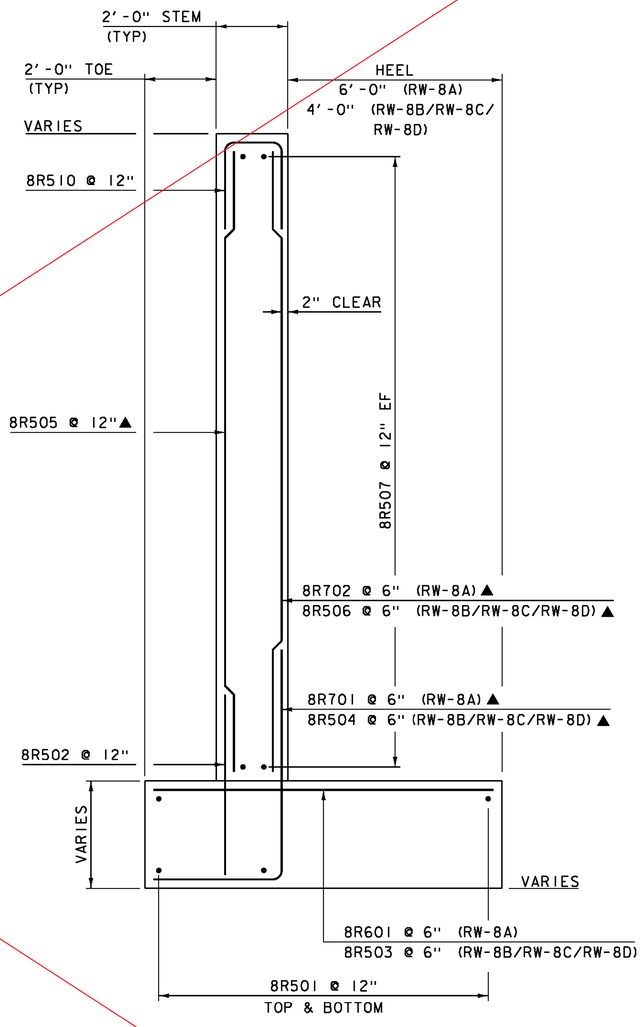


## RETAINING WALL #8 TYPICAL

SCALE ½ = 1'-0"

SEE SHEET 124-R

**NOTE:**

NF = NEAR FACE
FF = FAR FACE
EF = EACH FACE
▲ = CUT TO FIT IN FIELD
3" CLEAR, UNLESS OTHERWISE SPECIFIED ON THE PLANS.
2'-2" LAP FOR #5 BAR
2'-7" LAP FOR #6 BAR
3'-5" LAP FOR #7 BAR
4'-6" LAP FOR #8 BAR

| | |
|---|---|
| PROJECT NAME: | HARTFORD |
| PROJECT NUMBER: | IM 091-2(79) |
| FILE NAME: sl2al32retwall.dgn | PLOT DATE: 15-DEC-2014 |
| PROJECT LEADER: K. HIGGINS | DRAWN BY: J. SALVATORI |
| DESIGNED BY: G. LAROCHE | CHECKED BY: J. GRIGAS |
| RETAINING WALL #8 | SHEET 124 OF 166 |

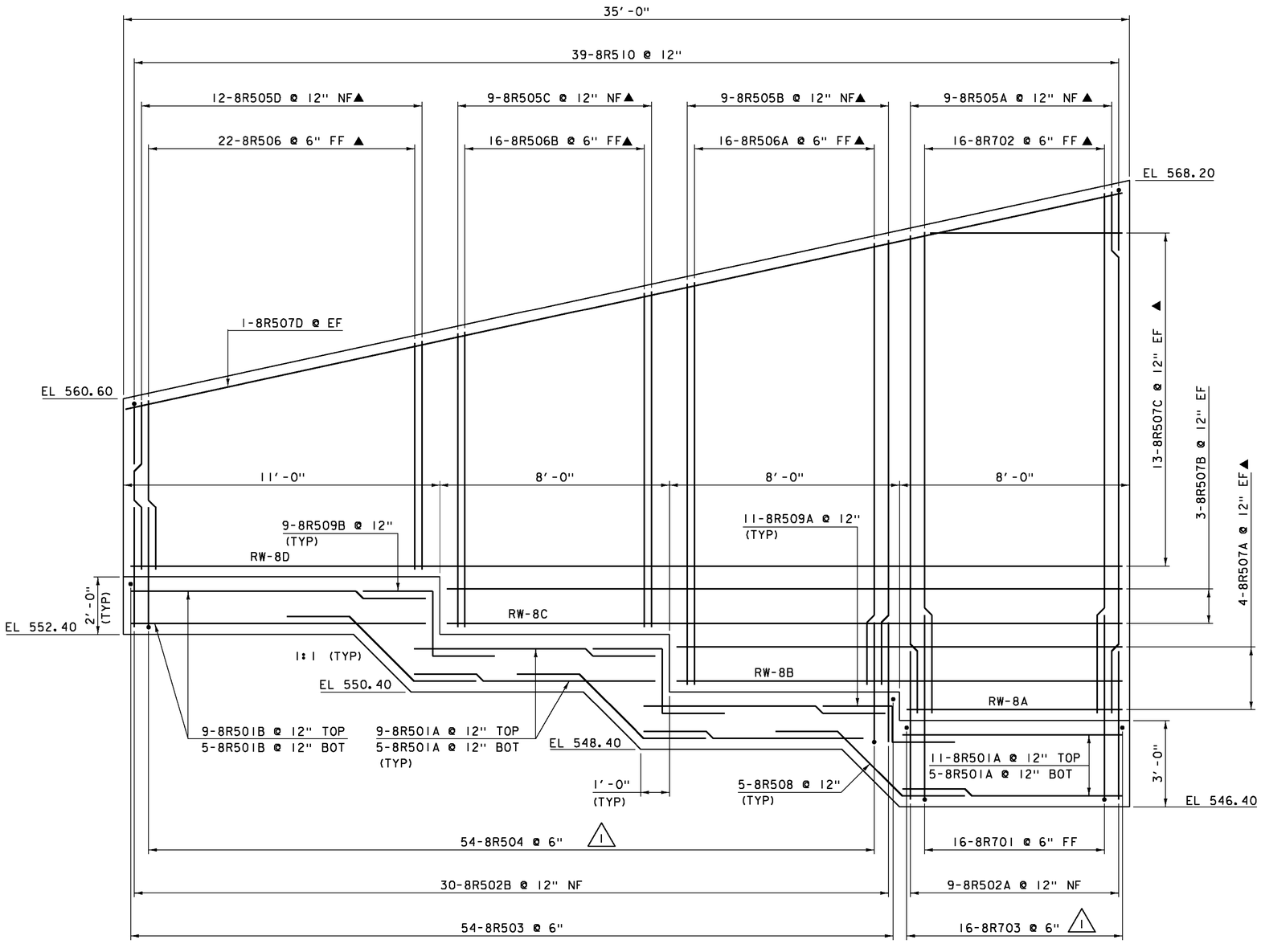


## RETAINING WALL #8 ELEVATION

SCALE ½ =1'-0"

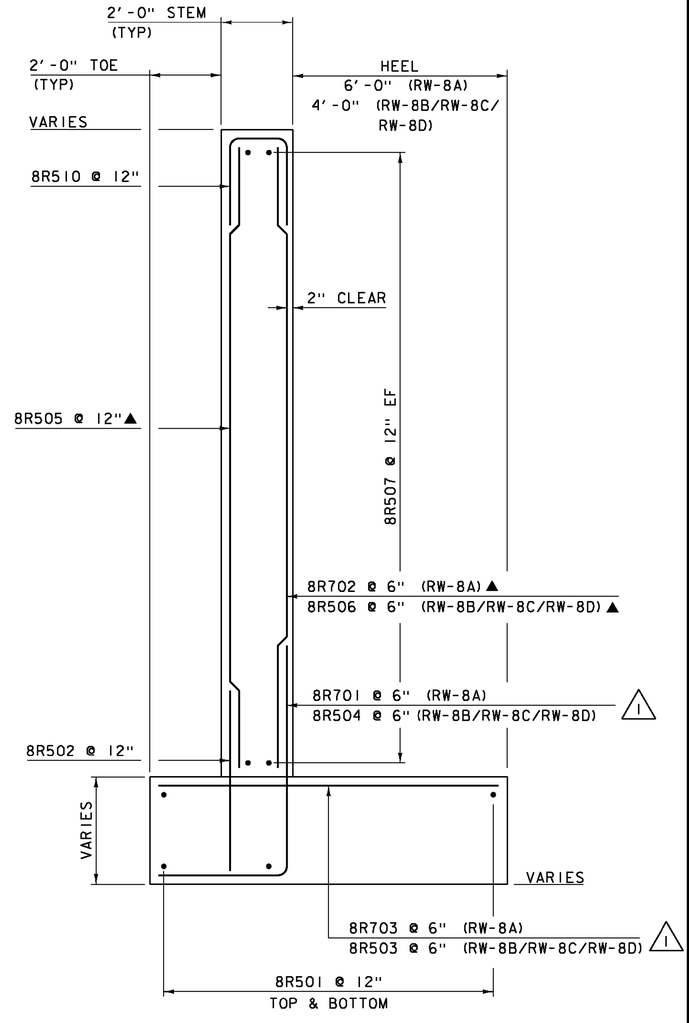


## RETAINING WALL #8 TYPICAL

SCALE ½ =1'-0"

| REVISION | DATE | DESCRIPTION | BY |
|---|---|---|---|
| 1 | 03-05-2015 | BAR CHANGES PER DESIGN | JS |

**NOTE:**

NF = NEAR FACE
FF = FAR FACE
EF = EACH FACE
▲ = CUT TO FIT IN FIELD
3" CLEAR, UNLESS OTHERWISE SPECIFIED ON THE PLANS.
2'-2" LAP FOR #5 BAR
2'-7" LAP FOR #6 BAR
3'-5" LAP FOR #7 BAR
4'-6" LAP FOR #8 BAR

PROJECT NAME: HARTFORD
PROJECT NUMBER: IM 091-2(79)

FILE NAME: sl2al32retwall.dgn
PROJECT LEADER: K. HIGGINS
DESIGNED BY: G. LAROCHE
RETAINING WALL #8

PLOT DATE: 05-MAR-2015
DRAWN BY: J. SALVATORI
CHECKED BY: J. GRIGAS
SHEET 124R OF 166

STATE OF VERMONT
AGENCY OF TRANSPORTATION

# ⚠1 REINFORCING STEEL SCHEDULE

| ITEM | EACH | SIZE | LENGTH | MARK | TYPE | A | B | C | D | E | F | G | H | J | K | R | O |
|---|---|---|---|---|---|---|---|---|---|---|---|---|---|---|---|---|---|
| | 32 | 5 | 36'- 2" | 1S501.3 | STR | | | | | | | | | | | | |
| ▲ | 90 | 5 | 17'- 1" | 1S502.3 | STR | | | | | | | | | | | | |
| ▲ | 30 | 5 | 37'- 2" | 1S503.3 | STR | | | | | | | | | | | | |
| ✳ ▲ | 21 | 5 | 11'- 9" | 1S504.3 | STR | | | | | | | | | | | | |
| ▲ | 28 | 5 | 26'- 2" | 1S505.3 | STR | | | | | | | | | | | | |
| ▲ | 46 | 5 | 11'- 10" | 1S506.3 | STR | | | | | | | | | | | | |
| | 356 | 5 | 35'- 7" | 1S507.3 | STR | | | | | | | | | | | | |
| | 88 | 5 | 27'- 2" | 1S508.3 | STR | | | | | | | | | | | | |
| | 12 | 5 | 27'- 2" | 1S509.3 | STR | | | | | | | | | | | | |
| | 56 | 6 | 36'- 6" | 1S601.3 | STR | | | | | | | | | | | | |
| | 484 | 6 | 25'- 7" | 1S602.3 | STR | | | | | | | | | | | | |
| ✳ | 65 | 6 | 23'- 11" | 1S603.3 | STR | | | | | | | | | | | | |
| | 102 | 6 | 2'- 10" | 1S605.3 | STR | | | | | | | | | | | | |
| △ | 466 | 4 | 5'- 0" | 1S401.3 | 1 | 0'- 6" | 4'- 6" | | | | | --- | | 0'- 4" | | | |
| ▲ | 416 | 5 | 3'- 9" | 1S510.3 | 1 | 0'- 7" | 3'- 2" | | | | | --- | | 0'- 5" | | | |
| | 204 | 5 | 18'- 7" | 1S511.3 | S5 | 2'- 5" | 6'- 1" | 1'- 10" | 5'- 10" | | | 2'- 5" | | | | | |
| | 102 | 5 | 5'- 6" | 1S512.3 | 22 | | 2'- 5" | 3'- 1" | --- | | | | 1'- 9" | --- | 1'- 9" | --- | |
| | 124 | 5 | 5'- 8" | 1S513.3 | 1 | 0'- 7" | 5'- 1" | | | | | --- | | 0'- 5" | | | |
| | 212 | 6 | 7'- 3" | 1S604.3 | 16 | 1'- 0" | 2'- 1" | 1'- 2" | 3'- 0" | | | | 2'- 1" | | 2'- 1" | | |

## ~ NOTES ~

1. UNLESS OTHERWISE DESIGNATED, ALL BAR REINFORCEMENT FOR CONCRETE IN SIZES UP TO AND INCLUDING NO. 18 SHALL CONFORM TO THE REQUIREMENTS OF THE "SPECIFICATIONS FOR DEFORMED BILLET-STEEL BARS FOR CONCRETE REINFORCEMENT", AASHTO M 31 (ASTM A 615-SI). ALL BARS SHALL BE GRADE 60, UNLESS OTHERWISE DESIGNATED.
2. FOR TYPICAL BENDING DETAILS, RECOMMENDED PIN DIAMETER "D" OF BENDS AND HOOKS, AND OTHER STANDARD PRACTICE, SEE CURRENT CONCRETE REINFORCING STEEL INSTITUTE "MANUAL OF STANDARD PRACTICE".
3. BARS WHICH REQUIRE MORE ACCURATE BENDING THAN STANDARD PRACTICES SHOULD HAVE LIMITS INDICATED.
4. ALL DIMENSIONS ARE OUT TO OUT OF BAR EXCEPT "A" AND "G" ON STANDARD 180 DEGREE AND 135 DEGREE HOOKS.
5. "J" DIMENSION ON 180 DEGREE HOOKS TO BE SHOWN ONLY WHERE NECESSARY TO RESTRICT HOOK SIZE. OTHERWISE, STANDARD HOOKS ARE TO BE USED.
6. "H" DIMENSION ON STIRRUPS TO BE SHOWN ONLY WHEN NECESSARY TO MAINTAIN CLEARANCES.
7. WHERE SLOPE DIFFERS FROM 45 DEGREES, DIMENSIONS "H" AND "K" MUST BE SHOWN.
8. ▲ DENOTES BARS TO BE CUT IN FIELD.
9. ✳ DENOTES ONE EXTRA BAR ADDED FOR TESTING PURPOSES.
10. △ DENOTES TWO EXTRA BARS ADDED FOR TESTING PURPOSES.
11. E IN BAR MARK PREFIX DENOTES EPOXY COATED REINFORCING STEEL.

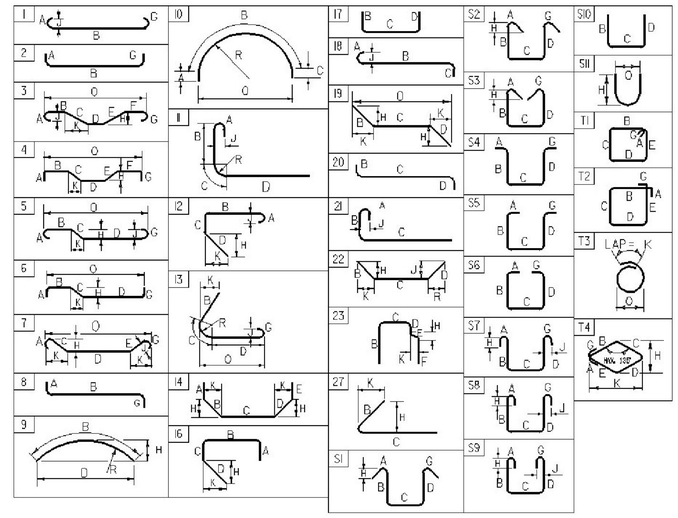


### ASTM STANDARD REINFORCING BARS

| | | | | |
|---|---|---|---|---|
| #3 | 0.376 | 0.375 | 0.11 | 1.178 |
| #4 | 0.668 | 0.500 | 0.20 | 1.571 |
| #5 | 1.043 | 0.625 | 0.31 | 1.963 |
| #6 | 1.502 | 0.750 | 0.44 | 2.356 |
| #7 | 2.04 | 0.875 | 0.60 | 2.749 |
| #8 | 2.670 | 1.000 | 0.79 | 3.14 |
| #9 | 3.400 | 1.13 | 1.00 | 3.54 |
| #10 | 4.3 | 1.270 | 1.27 | 3.990 |
| #11 | 5.31 | 1.410 | 1.56 | 4.430 |
| #14 | 7.65 | 1.69 | 2.25 | 5.32 |
| #18 | 13.60 | 2.26 | 4.00 | 7.09 |

### ~ REINFORCING STEEL CORROSION RESISTANCE LEVEL ~

THE REINFORCING STEEL MARKS IN THIS SCHEDULE INDICATE THE REQUIRED BAR CORROSION RESISTANCE LEVEL. CORROSION RESISTANCE LEVEL IS DENOTED WITH A .2 FOR LEVEL TWO SUFFIX OR .3 FOR LEVEL THREE SUFFIX. .1 FOR LEVEL ONE IS TO BE OMITTED. THE BAR MATERIAL TYPE AND BAR STEEL GRADE PROVIDED FOR EACH CORROSION LEVEL WILL BE RECORDED ON THE PLAN SET PI SHEET FOR AS-BUILT RECORD PLAN ARCHIVES.

| REVISION | DATE | DESCRIPTION | BY |
|---|---|---|---|
| ⚠1 | 01-05-2015 | REINFORCING STEEL SCHEDULE UPDATE, ADDED TEST BARS | RK |

PROJECT NAME: **HARTFORD**
PROJECT NUMBER: **IM 091-2 (79)**

FILE NAME: **s12a132RSS_43S.dgn**
PROJECT MANAGER: **K. HIGGINS**
DESIGNED BY: **R. KLINEFELTER**
**RSS SUPERSTRUCTURE 43S**

PLOT DATE: **1/5/2015**
DRAWN BY: **K. FRIEDLAND**
CHECKED BY: **J. GRIGAS**
SHEET **125** OF **166**

STATE OF VERMONT
AGENCY OF TRANSPORTATION

# △1 REINFORCING STEEL SCHEDULE

| ITEM | EACH | SIZE | LENGTH | MARK | TYPE | A | B | C | D | E | F | G | H | J | K | R | O |
|---|---|---|---|---|---|---|---|---|---|---|---|---|---|---|---|---|---|
| | 32 | 5 | 36'- 2" | 2S501.3 | STR | | | | | | | | | | | | |
| ▲ | 90 | 5 | 17'- 1" | 2S502.3 | STR | | | | | | | | | | | | |
| ▲ | 30 | 5 | 36'- 5" | 2S503.3 | STR | | | | | | | | | | | | |
| ✳ ▲ | 23 | 5 | 11'- 1" | 2S504.3 | STR | | | | | | | | | | | | |
| ▲ | 26 | 5 | 26'- 0" | 2S505.3 | STR | | | | | | | | | | | | |
| ▲ | 46 | 5 | 10'- 11" | 2S506.3 | STR | | | | | | | | | | | | |
| | 344 | 5 | 35'- 7" | 2S507.3 | STR | | | | | | | | | | | | |
| | 80 | 5 | 26'- 2" | 2S508.3 | STR | | | | | | | | | | | | |
| | 12 | 5 | 26'- 2" | 2S509.3 | STR | | | | | | | | | | | | |
| | 56 | 6 | 36'- 6" | 2S601.3 | STR | | | | | | | | | | | | |
| | 484 | 6 | 24'- 7" | 2S602.3 | STR | | | | | | | | | | | | |
| ✳ | 63 | 6 | 23'- 6" | 2S603.3 | STR | | | | | | | | | | | | |
| | 98 | 6 | 2'- 10" | 2S605.3 | STR | | | | | | | | | | | | |
| △ | 466 | 4 | 4'- 10" | 2S401.3 | 1 | 0'- 6" | 4'- 4" | | | | | --- | | 0'- 4" | | | |
| ▲ | 416 | 5 | 3'- 4" | 2S510.3 | 1 | 0'- 7" | 2'- 9" | | | | | --- | | 0'- 5" | | | |
| | 202 | 5 | 16'- 9" | 2S511.3 | S5 | 2'- 5" | 5'- 2" | 1'- 10" | 4'- 11" | | | 2'- 5" | | | | | |
| | 102 | 5 | 5'- 6" | 2S512.3 | 22 | | 2'- 5" | 3'- 1" | --- | | | | 1'- 9" | --- | 1'- 9" | --- | |
| | 124 | 5 | 5'- 4" | 2S513.3 | 1 | 0'- 7" | 4'- 9" | | | | | --- | | 0'- 5" | | | |
| | 204 | 6 | 7'- 3" | 2S604.3 | 16 | 1'- 0" | 2'- 1" | 1'- 2" | 3'- 0" | | | | 2'- 1" | | 2'- 1" | | |

| ITEM | EACH | SIZE | LENGTH | MARK | TYPE | A | B | C | D | E | F | G | H | J | K | R | O |
|---|---|---|---|---|---|---|---|---|---|---|---|---|---|---|---|---|---|

## ~ NOTES ~

1. UNLESS OTHERWISE DESIGNATED, ALL BAR REINFORCEMENT FOR CONCRETE IN SIZES UP TO AND INCLUDING NO. 18 SHALL CONFORM TO THE REQUIREMENTS OF THE "SPECIFICATIONS FOR DEFORMED BILLET-STEEL BARS FOR CONCRETE REINFORCEMENT", AASHTO M 31 (ASTM A 615-SI). ALL BARS SHALL BE GRADE 60, UNLESS OTHERWISE DESIGNATED.
2. FOR TYPICAL BENDING DETAILS, RECOMMENDED PIN DIAMETER "D" OF BENDS AND HOOKS, AND OTHER STANDARD PRACTICE, SEE CURRENT CONCRETE REINFORCING STEEL INSTITUTE "MANUAL OF STANDARD PRACTICE".
3. BARS WHICH REQUIRE MORE ACCURATE BENDING THAN STANDARD PRACTICES SHOULD HAVE LIMITS INDICATED.
4. ALL DIMENSIONS ARE OUT TO OUT OF BAR EXCEPT "A" AND "G" ON STANDARD 180 DEGREE AND 135 DEGREE HOOKS.
5. "J" DIMENSION ON 180 DEGREE HOOKS TO BE SHOWN ONLY WHERE NECESSARY TO RESTRICT HOOK SIZE. OTHERWISE, STANDARD HOOKS ARE TO BE USED.
6. "H" DIMENSION ON STIRRUPS TO BE SHOWN ONLY WHEN NECESSARY TO MAINTAIN CLEARANCES.
7. WHERE SLOPE DIFFERS FROM 45 DEGREES, DIMENSIONS "H" AND "K" MUST BE SHOWN.
8. ▲ DENOTES BARS TO BE CUT IN FIELD.
9. ✳ DENOTES ONE EXTRA BAR ADDED FOR TESTING PURPOSES.
10. △ DENOTES TWO EXTRA BARS ADDED FOR TESTING PURPOSES.
11. E IN BAR MARK PREFIX DENOTES EPOXY COATED REINFORCING STEEL.

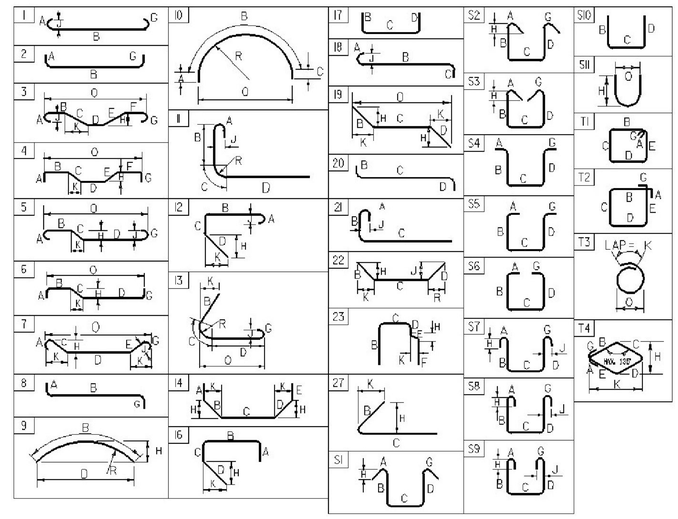


### ASTM STANDARD REINFORCING BARS

| | | | | |
|---|---|---|---|---|
| #3 | 0.376 | 0.375 | 0.11 | 1.178 |
| #4 | 0.668 | 0.500 | 0.20 | 1.571 |
| #5 | 1.043 | 0.625 | 0.31 | 1.963 |
| #6 | 1.502 | 0.750 | 0.44 | 2.356 |
| #7 | 2.04 | 0.875 | 0.60 | 2.749 |
| #8 | 2.670 | 1.000 | 0.79 | 3.14 |
| #9 | 3.400 | 1.13 | 1.00 | 3.54 |
| #10 | 4.3 | 1.270 | 1.27 | 3.990 |
| #11 | 5.31 | 1.410 | 1.56 | 4.430 |
| #14 | 7.65 | 1.69 | 2.25 | 5.32 |
| #18 | 13.60 | 2.26 | 4.00 | 7.09 |

### ~ REINFORCING STEEL CORROSION RESISTANCE LEVEL ~

THE REINFORCING STEEL MARKS IN THIS SCHEDULE INDICATE THE REQUIRED BAR CORROSION RESISTANCE LEVEL. CORROSION RESISTANCE LEVEL IS DENOTED WITH A .2 FOR LEVEL TWO SUFFIX OR .3 FOR LEVEL THREE SUFFIX. .1 FOR LEVEL ONE IS TO BE OMITTED. THE BAR MATERIAL TYPE AND BAR STEEL GRADE PROVIDED FOR EACH CORROSION LEVEL WILL BE RECORDED ON THE PLAN SET PI SHEET FOR AS-BUILT RECORD PLAN ARCHIVES.

| REVISION | DATE | DESCRIPTION | BY |
|---|---|---|---|
| △1 | 01-05-2015 | REINFORCING STEEL SCHEDULE UPDATE, ADDED TEST BARS | RK |

PROJECT NAME: **HARTFORD**
PROJECT NUMBER: **IM 091-2 (79)**

FILE NAME: **s12a132RSS_43N.dgn**
PROJECT MANAGER: **K. HIGGINS**
DESIGNED BY: **R. KLINEFELTER**
**RSS SUPERSTRUCTURE 43N**

PLOT DATE: **1/5/2015**
DRAWN BY: **K. FRIEDLAND**
CHECKED BY: **J. GRIGAS**
SHEET **126** OF **166**

STATE OF VERMONT
AGENCY OF TRANSPORTATION

# ⚠1 REINFORCING STEEL SCHEDULE

| ITEM | EACH | SIZE | LENGTH | MARK | TYPE | A | B | C | D | E | F | G | H | J | K | R | O |
|---|---|---|---|---|---|---|---|---|---|---|---|---|---|---|---|---|---|
| | **ABUTMENT 1:** | | | | | | | | | | | | | | | | |
| | 48 | 5 | 33'- 9" | 1A501 | STR | | | | | | | | | | | | |
| ✳ | 90 | 5 | 5'- 2" | 1A502 | STR | | | | | | | | | | | | |
| ▲ | 89 | 5 | 20'- 5" | 1A503 | STR | | | | | | | | | | | | |
| | 116 | 5 | 32'- 9" | 1A504 | STR | | | | | | | | | | | | |
| | 92 | 5 | 7'- 5" | 1A507 | 17 | | 2'- 5" | 2'- 7" | 2'- 5" | | | | | | | | |
| | 17 | 5 | 12'- 11" | 1A508 | 16 | 2'- 5" | 4'- 7" | 1'- 2" | 4'- 9" | | | | 2'- 7" | | 2'- 7" | | |
| ✳ | 201 | 7 | 10'- 6" | 1A701 | STR | | | | | | | | | | | | |
| | 83 | 7 | 14'- 1" | 1A702 | STR | | | | | | | | | | | | |
| ✳ | 84 | 9 | 10'- 0" | 1A901 | STR | | | | | | | | | | | | |
| | 83 | 9 | 14'- 3" | 1A902 | 17 | | 5'- 7" | 8'- 9" | | | | | | | | | |
| ✳ ▲ | 26 | 5 | 10'- 6" | 1A505.3 | STR | | | | | | | | | | | | |
| ▲ | 17 | 5 | 13'- 7" | 1A506.3 | 19 | | 4'- 9" | 8'- 10" | | | | | 2'- 7" | | 2'- 7" | | |
| | 25 | 5 | 6'- 5" | 1A509.3 | 17 | | 2'- 5" | 1'- 7" | 2'- 5" | | | | | | | | |
| | 24 | 5 | 5'- 7" | 1A510.3 | STR | | | | | | | | | | | | |
| ▲ | 22 | 5 | 8'- 0" | 1A511.3 | STR | | | | | | | | | | | | |
| | 2 | 5 | 5'- 8" | 1A512.3 | 19 | | 2'- 5" | 3'- 3" | | | | | 1'- 4" | | 2'- 0" | | |
| | **WW1:** | | | | | | | | | | | | | | | | |
| | 24 | 5 | 13'- 0" | 1W501 | STR | | | | | | | | | | | | |
| | 17 | 5 | 5'- 2" | 1W502 | STR | | | | | | | | | | | | |
| | 17 | 5 | 19'- 5" | 1W503 | STR | | | | | | | | | | | | |
| | 54 | 5 | 11'- 10" | 1W504 | STR | | | | | | | | | | | | |
| | 54 | 5 | 11'- 0" | 1W509 | 19 | | 5'- 6" | 5'- 6" | | | | | 3'- 6" | | 4'- 2" | | |
| | 27 | 5 | 4'- 10" | 1W510 | 19 | | 2'- 5" | 2'- 5" | | | | | 1'- 10" | | 1'- 7" | | |
| | 41 | 7 | 10'- 6" | 1W701 | STR | | | | | | | | | | | | |
| | 23 | 7 | 19'- 5" | 1W702 | STR | | | | | | | | | | | | |
| | 23 | 8 | 14'- 4" | 1W801 | 17 | | 5'- 7" | 8'- 9" | | | | | | | | | |
| ▲ | 27 | 5 | 9'- 11" | 1W505.3 | STR | | | | | | | | | | | | |
| ▲ | 13 | 5 | 7'- 5" | 1W506.3 | 17 | | 2'- 5" | 2'- 7" | 2'- 5" | | | | | | | | |
| ▲ | 22 | 5 | 8'- 0" | 1W507.3 | STR | | | | | | | | | | | | |
| | 2 | 5 | 7'- 10" | 1W508.3 | 19 | | 0'- 5" | 7'- 5" | | | | | 0'- 2" | | 0'- 4" | | |
| | 11 | 5 | 4'- 10" | 1W511.3 | 19 | | 2'- 5" | 2'- 5" | | | | | 1'- 10" | 1'- 7" | | | |
| | **WW2:** | | | | | | | | | | | | | | | | |
| | 5 | 5 | 7'- 5" | 2W501 | 17 | | 2'- 5" | 2'- 7" | 2'- 5" | | | | | | | | |
| | 16 | 5 | 5'- 2" | 2W502 | STR | | | | | | | | | | | | |
| | 32 | 5 | 18'- 3" | 2W503 | STR | | | | | | | | | | | | |
| ▲ | 52 | 5 | 11'- 0" | 2W505 | STR | | | | | | | | | | | | |
| | 26 | 5 | 13'- 7" | 2W508 | 22 | | 2'- 5" | 8'- 9" | 2'- 5" | | | | 1'- 11" | 1'- 11" | 1'- 4" | 1'- 4" | |
| | 26 | 5 | 5'- 4" | 2W509 | 27 | | 2'- 8" | 2'- 8" | | | | | 2'- 6" | | 0'- 10" | | |
| | 24 | 5 | 7'- 0" | 2W504.3 | STR | | | | | | | | | | | | |
| ▲ | 14 | 5 | 7'- 10" | 2W506.3 | STR | | | | | | | | | | | | |
| | 12 | 5 | 7'- 5" | 2W507.3 | 17 | | 2'- 5" | 2'- 7" | 2'- 5" | | | | | | | | |
| | 14 | 5 | 5'- 4" | 2W510.3 | 27 | | 2'- 8" | 2'- 8" | | | | | 2'- 6" | | 0'- 10" | | |

| ITEM | EACH | SIZE | LENGTH | MARK | TYPE | A | B | C | D | E | F | G | H | J | K | R | O |
|---|---|---|---|---|---|---|---|---|---|---|---|---|---|---|---|---|---|

## ~ NOTES ~

1. UNLESS OTHERWISE DESIGNATED, ALL BAR REINFORCEMENT FOR CONCRETE IN SIZES UP TO AND INCLUDING NO. 18 SHALL CONFORM TO THE REQUIREMENTS OF THE "SPECIFICATIONS FOR DEFORMED BILLET-STEEL BARS FOR CONCRETE REINFORCEMENT", AASHTO M 31 (ASTM A 615-SI). ALL BARS SHALL BE GRADE 60, UNLESS OTHERWISE DESIGNATED.
2. FOR TYPICAL BENDING DETAILS, RECOMMENDED PIN DIAMETER "D" OF BENDS AND HOOKS, AND OTHER STANDARD PRACTICE, SEE CURRENT CONCRETE REINFORCING STEEL INSTITUTE "MANUAL OF STANDARD PRACTICE".
3. BARS WHICH REQUIRE MORE ACCURATE BENDING THAN STANDARD PRACTICES SHOULD HAVE LIMITS INDICATED.
4. ALL DIMENSIONS ARE OUT TO OUT OF BAR EXCEPT "A" AND "G" ON STANDARD 180 DEGREE AND 135 DEGREE HOOKS.
5. "J" DIMENSION ON 180 DEGREE HOOKS TO BE SHOWN ONLY WHERE NECESSARY TO RESTRICT HOOK SIZE. OTHERWISE, STANDARD HOOKS ARE TO BE USED.
6. "H" DIMENSION ON STIRRUPS TO BE SHOWN ONLY WHEN NECESSARY TO MAINTAIN CLEARANCES.
7. WHERE SLOPE DIFFERS FROM 45 DEGREES, DIMENSIONS "H" AND "K" MUST BE SHOWN.
8. ▲ DENOTES BARS TO BE CUT IN FIELD.
9. ✳ DENOTES ONE EXTRA BAR ADDED FOR TESTING PURPOSES.
10. △ DENOTES TWO EXTRA BARS ADDED FOR TESTING PURPOSES.
11. E IN BAR MARK PREFIX DENOTES EPOXY COATED REINFORCING STEEL.

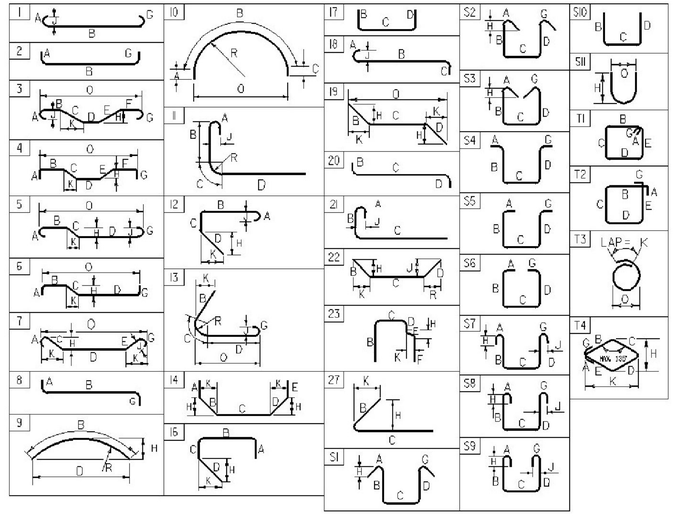


**ASTM STANDARD REINFORCING BARS**

| BAR SIZE DESIGNATION | WEIGHT POUNDS PER FOOT | NOMINAL DIMENSIONS ROUND SECTION DIAMETER INCHES | AREA INCHES$^2$ | PERIMETER INCHES |
|---|---|---|---|---|
| #3 | 0.376 | 0.375 | 0.11 | 1.178 |
| #4 | 0.668 | 0.500 | 0.20 | 1.571 |
| #5 | 1.043 | 0.625 | 0.31 | 1.963 |
| #6 | 1.502 | 0.750 | 0.44 | 2.356 |
| #7 | 2.044 | 0.875 | 0.60 | 2.749 |
| #8 | 2.670 | 1.000 | 0.79 | 3.142 |
| #9 | 3.400 | 1.128 | 1.00 | 3.544 |
| #10 | 4.303 | 1.270 | 1.27 | 3.990 |
| #11 | 5.313 | 1.410 | 1.56 | 4.430 |
| #14 | 7.65 | 1.693 | 2.25 | 5.32 |
| #18 | 13.60 | 2.257 | 4.00 | 7.09 |

| REVISION | DATE | DESCRIPTION | BY |
|---|---|---|---|
| ⚠1 | 01-07-2015 | REINFORCING STEEL SCHEDULE UPDATE, ADDED TEST BARS | WDL |

PROJECT NAME: **HARTFORD**
PROJECT NUMBER: **IM 091-2 (79)**

FILE NAME: **s12a132RSS_AB1.dgn** PLOT DATE: **1/7/2015**
PROJECT MANAGER: **K. HIGGINS** DRAWN BY: **J. SALVATORI**
DESIGNED BY: **G. LAROCHE** CHECKED BY: **J. GRIGAS**
**REINFORCING STEEL SCHEDULE ABUTMENT 1** SHEET **127** OF **166**

STATE OF VERMONT
AGENCY OF TRANSPORTATION

# ⚠ REINFORCING STEEL SCHEDULE

| ITEM | EACH | SIZE | LENGTH | MARK | TYPE | A | B | C | D | E | F | G | H | J | K | R | O |
|---|---|---|---|---|---|---|---|---|---|---|---|---|---|---|---|---|---|
| | **ABUTMENT 2:** | | | | | | | | | | | | | | | | |
| | 48 | 5 | 32'- 7" | 2A501 | STR | | | | | | | | | | | | |
| ✳ | 86 | 5 | 5'- 2" | 2A502 | STR | | | | | | | | | | | | |
| ▲ | 85 | 5 | 20'- 2" | 2A503 | STR | | | | | | | | | | | | |
| | 112 | 5 | 32'- 6" | 2A504 | STR | | | | | | | | | | | | |
| | 85 | 5 | 7'- 5" | 2A507 | 17 | | 2'- 5" | 2'- 7" | 2'- 5" | | | | | | | | |
| | 19 | 5 | 12'- 11" | 2A508 | 16 | | 2'- 5" | 4'- 7" | 1'- 2" | 4'- 9" | | | 3'- 4" | | 3'- 4" | | |
| ✳ | 211 | 7 | 10'- 6" | 2A701 | STR | | | | | | | | | | | | |
| | 81 | 7 | 13'- 10" | 2A702 | STR | | | | | | | | | | | | |
| ✳ | 82 | 9 | 10'- 0" | 2A901 | STR | | | | | | | | | | | | |
| | 81 | 9 | 14'- 3" | 2A902 | 17 | | 5'- 6" | 8'- 9" | | | | | | | | | |
| ▲ | 23 | 5 | 10'- 6" | 2A505.3 | STR | | | | | | | | | | | | |
| ▲ | 18 | 5 | 13'- 7" | 2A506.3 | 19 | | 4'- 9" | 8'- 10" | | | | | 3'- 4" | | 3'- 4" | | |
| | 17 | 5 | 6'- 5" | 2A509.3 | 17 | | 2'- 5" | 1'- 7" | 2'- 5" | | | | | | | | |
| | 24 | 5 | 5'- 4" | 2A510.3 | STR | | | | | | | | | | | | |
| ▲ | 20 | 5 | 7'- 9" | 2A511.3 | STR | | | | | | | | | | | | |
| | 2 | 5 | 5'- 0" | 2A512.3 | 19 | | 2'- 10" | 2'- 2" | | | | | 1'- 6" | | 2'- 5" | | |
| | **WW3:** | | | | | | | | | | | | | | | | |
| | 24 | 5 | 12'- 11" | 3W501 | STR | | | | | | | | | | | | |
| | 17 | 5 | 5'- 2" | 3W502 | STR | | | | | | | | | | | | |
| | 17 | 5 | 19'- 2" | 3W503 | STR | | | | | | | | | | | | |
| | 54 | 5 | 11'- 4" | 3W504 | STR | | | | | | | | | | | | |
| | 28 | 5 | 18'- 11" | 3W509 | 22 | | 2'- 3" | 14'- 5" | 2'- 3" | | | | 1'- 1" | 1'- 1" | 2'- 0" | 2'- 0" | |
| | 28 | 5 | 4'- 8" | 3W510 | 19 | | 2'- 4" | 2'- 4" | | | | | 1'- 11" | | 1'- 4" | | |
| | 39 | 7 | 10'- 6" | 3W701 | STR | | | | | | | | | | | | |
| | 21 | 7 | 19'- 2" | 3W702 | STR | | | | | | | | | | | | |
| ✳ | 23 | 8 | 13'- 0" | 3W801 | 17 | | 5'- 6" | 8'- 9" | | | | | | | | | |
| ▲ | 28 | 5 | 9'- 11" | 3W505.3 | STR | | | | | | | | | | | | |
| | 12 | 5 | 7'- 5" | 3W506.3 | 17 | | 2'- 5" | 2'- 7" | 2'- 5" | | | | | | | | |
| ▲ | 24 | 5 | 7'- 8" | 3W507.3 | STR | | | | | | | | | | | | |
| | 2 | 5 | 8'- 11" | 3W508.3 | 19 | | 0'- 10" | 8'- 1" | | | | | 0'- 5" | | 0'- 8" | | |
| | 24 | 5 | 4'- 8" | 3W511.3 | 19 | | 2'- 4" | 2'- 4" | | | | | 1'- 11" | | 1'- 4" | | |
| | **WW4:** | | | | | | | | | | | | | | | | |
| | 7 | 5 | 7'- 5" | 4W501 | 17 | | 2'- 5" | 2'- 7" | 2'- 5" | | | | | | | | |
| | 16 | 5 | 5'- 2" | 4W502 | STR | | | | | | | | | | | | |
| | 32 | 5 | 17'- 11" | 4W503 | STR | | | | | | | | | | | | |
| | 50 | 5 | 11'- 2" | 4W505 | STR | | | | | | | | | | | | |
| | 25 | 5 | 17'- 7" | 4W508 | 22 | | 2'- 3" | 13'- 1" | 2'- 3" | | | | 1'- 3" | 1'- 2" | 1'- 10" | 1'- 11" | |
| | 25 | 5 | 4'- 8" | 4W509 | 19 | | 2'- 4" | 2'- 4" | | | | | 2'- 1" | | 1'- 0" | | |
| ✳ | 26 | 5 | 7'- 0" | 4W504.3 | STR | | | | | | | | | | | | |
| | 16 | 5 | 7'- 10" | 4W506.3 | STR | | | | | | | | | | | | |
| | 15 | 5 | 7'- 5" | 4W507.3 | 17 | | 2'- 5" | 2'- 7" | 2'- 5" | | | | | | | | |
| | 20 | 5 | 4'- 8" | 4W510.3 | 19 | | 2'- 4" | 2'- 4" | | | | | 2'- 1" | | 1'- 0" | | |

| ITEM | EACH | SIZE | LENGTH | MARK | TYPE | A | B | C | D | E | F | G | H | J | K | R | O |
|---|---|---|---|---|---|---|---|---|---|---|---|---|---|---|---|---|---|

## ~ NOTES ~

1. UNLESS OTHERWISE DESIGNATED, ALL BAR REINFORCEMENT FOR CONCRETE IN SIZES UP TO AND INCLUDING NO. 18 SHALL CONFORM TO THE REQUIREMENTS OF THE "SPECIFICATIONS FOR DEFORMED BILLET-STEEL BARS FOR CONCRETE REINFORCEMENT", AASHTO M 31 (ASTM A 615-SI). ALL BARS SHALL BE GRADE 60, UNLESS OTHERWISE DESIGNATED.
2. FOR TYPICAL BENDING DETAILS, RECOMMENDED PIN DIAMETER "D" OF BENDS AND HOOKS, AND OTHER STANDARD PRACTICE, SEE CURRENT CONCRETE REINFORCING STEEL INSTITUTE "MANUAL OF STANDARD PRACTICE".
3. BARS WHICH REQUIRE MORE ACCURATE BENDING THAN STANDARD PRACTICES SHOULD HAVE LIMITS INDICATED.
4. ALL DIMENSIONS ARE OUT TO OUT OF BAR EXCEPT "A" AND "G" ON STANDARD 180 DEGREE AND 135 DEGREE HOOKS.
5. "J" DIMENSION ON 180 DEGREE HOOKS TO BE SHOWN ONLY WHERE NECESSARY TO RESTRICT HOOK SIZE. OTHERWISE, STANDARD HOOKS ARE TO BE USED.
6. "H" DIMENSION ON STIRRUPS TO BE SHOWN ONLY WHEN NECESSARY TO MAINTAIN CLEARANCES.
7. WHERE SLOPE DIFFERS FROM 45 DEGREES, DIMENSIONS "H" AND "K" MUST BE SHOWN.
8. ▲ DENOTES BARS TO BE CUT IN FIELD.
9. ✳ DENOTES ONE EXTRA BAR ADDED FOR TESTING PURPOSES.
10. △ DENOTES TWO EXTRA BARS ADDED FOR TESTING PURPOSES.
11. E IN BAR MARK PREFIX DENOTES EPOXY COATED REINFORCING STEEL.

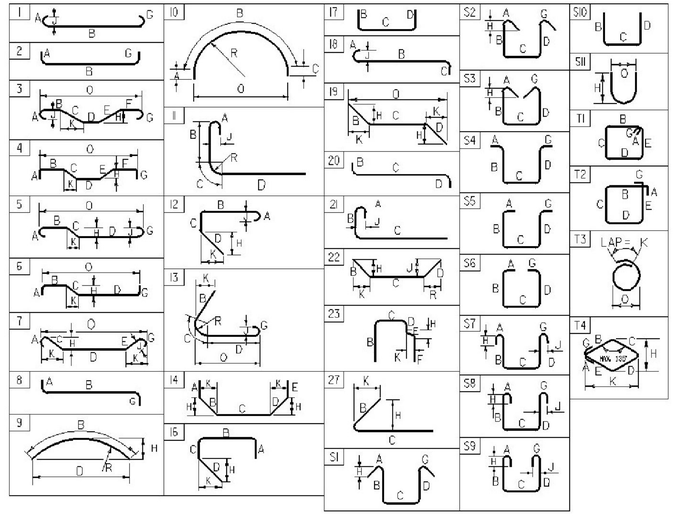


**ASTM STANDARD REINFORCING BARS**

| BAR SIZE DESIGNATION | WEIGHT POUNDS PER FOOT | NOMINAL DIMENSIONS ROUND SECTION DIAMETER INCHES | AREA INCHES$^2$ | PERIMETER INCHES |
|---|---|---|---|---|
| #3 | 0.376 | 0.375 | 0.11 | 1.178 |
| #4 | 0.668 | 0.500 | 0.20 | 1.571 |
| #5 | 1.043 | 0.625 | 0.31 | 1.963 |
| #6 | 1.502 | 0.750 | 0.44 | 2.356 |
| #7 | 2.044 | 0.875 | 0.60 | 2.749 |
| #8 | 2.670 | 1.000 | 0.79 | 3.142 |
| #9 | 3.400 | 1.128 | 1.00 | 3.544 |
| #10 | 4.303 | 1.270 | 1.27 | 3.990 |
| #11 | 5.313 | 1.410 | 1.56 | 4.430 |
| #14 | 7.65 | 1.693 | 2.25 | 5.32 |
| #18 | 13.60 | 2.257 | 4.00 | 7.09 |

| REVISION | DATE | DESCRIPTION | BY |
|---|---|---|---|
| ⚠ | 01-07-2015 | REINFORCING STEEL SCHEDULE UPDATE, ADDED TEST BARS | WDL |

PROJECT NAME: **HARTFORD**
PROJECT NUMBER: **IM 091-2 (79)**

FILE NAME: **s12a132RSS_AB2.dgn** PLOT DATE: **1/7/2015**
PROJECT MANAGER: **K.HIGGINS** DRAWN BY: **G. LAROCHE**
DESIGNED BY: **G. LAROCHE** CHECKED BY: **J.SALVATORI**
**REINFORCING STEEL SCHEDULE ABUTMENT 2** SHEET **128** OF **166**

STATE OF VERMONT
AGENCY OF TRANSPORTATION

# ⚠ REINFORCING STEEL SCHEDULE

| ITEM | EACH | SIZE | LENGTH | MARK | TYPE | A | B | C | D | E | F | G | H | J | K | R | O |
|---|---|---|---|---|---|---|---|---|---|---|---|---|---|---|---|---|---|
| | **ABUTMENT 3:** | | | | | | | | | | | | | | | | |
| | 48 | 5 | 32'- 11" | 3A501 | STR | | | | | | | | | | | | |
| ✳ | 92 | 5 | 5'- 2" | 3A502 | STR | | | | | | | | | | | | |
| ▲ | 91 | 5 | 16'- 3" | 3A503 | STR | | | | | | | | | | | | |
| | 92 | 5 | 32'- 7" | 3A504 | STR | | | | | | | | | | | | |
| | 87 | 5 | 7'- 5" | 3A507 | 17 | | 2'- 5" | 2'- 7" | 2'- 5" | | | | | | | | |
| | 24 | 5 | 12'- 11" | 3A508 | 16 | 2'- 5" | 4'- 7" | 1'- 2" | 4'- 9" | | | | 1'- 0" | | 1'- 0" | | |
| ✳ | 207 | 7 | 10'- 6" | 3A701 | STR | | | | | | | | | | | | |
| ▲ | 85 | 7 | 16'- 3" | 3A702 | STR | | | | | | | | | | | | |
| | 81 | 8 | 15'- 3" | 3A801 | 17 | | 5'- 6" | 9'- 9" | | | | | | | | | |
| ▲ | 28 | 5 | 10'- 0" | 3A505.3 | STR | | | | | | | | | | | | |
| ▲ | 28 | 5 | 13'- 3" | 3A506.3 | 19 | | 4'- 9" | 8'- 6" | | | | | 1'- 0" | | 1'- 0" | | |
| | 23 | 5 | 6'- 5" | 3A509.3 | 17 | | 2'- 5" | 1'- 7" | 2'- 5" | | | | | | | | |
| | 22 | 5 | 8'- 0" | 3A510.3 | STR | | | | | | | | | | | | |
| | 16 | 5 | 8'- 0" | 3A511.3 | STR | | | | | | | | | | | | |
| | 2 | 5 | 5'- 7" | 3A512.3 | 19 | | 3'- 8" | 1'- 11" | | | | | 1'- 8" | | 3'- 3" | | |
| | **WW5:** | | | | | | | | | | | | | | | | |
| | 6 | 5 | 7'- 5" | 5W501 | 17 | | 2'- 5" | 2'- 7" | 2'- 5" | | | | | | | | |
| | 16 | 5 | 5'- 2" | 5W502 | STR | | | | | | | | | | | | |
| | 29 | 5 | 16'- 9" | 5W503 | STR | | | | | | | | | | | | |
| | 46 | 5 | 11'- 2" | 5W505 | STR | | | | | | | | | | | | |
| | 23 | 5 | 17'- 7" | 5W508 | 22 | | 2'- 4" | 11'- 10" | 2'- 4" | | | | 1'- 4" | 1'- 4" | 1'- 10" | 1'- 10" | |
| | 23 | 5 | 4'- 10" | 5W509 | 19 | | 2'- 5" | 2'- 5" | | | | | 2'- 4" | | 0'- 9" | | |
| ✳ | 27 | 5 | 6'- 3" | 5W504.3 | STR | | | | | | | | | | | | |
| | 12 | 5 | 8'- 0" | 5W506.3 | STR | | | | | | | | | | | | |
| | 13 | 5 | 7'- 5" | 5W507.3 | 17 | | 2'- 5" | 2'- 7" | 2'- 5" | | | | | | | | |
| | 12 | 5 | 4'- 10" | 5W510.3 | 19 | | 2'- 5" | 2'- 5" | | | | | 2'- 4" | | 0'- 9" | | |
| | **WW6:** | | | | | | | | | | | | | | | | |
| | 24 | 5 | 12'- 11" | 6W501 | STR | | | | | | | | | | | | |
| | 17 | 5 | 5'- 2" | 6W502 | STR | | | | | | | | | | | | |
| | 17 | 5 | 12'- 10" | 6W503 | STR | | | | | | | | | | | | |
| | 38 | 5 | 11'- 4" | 6W504 | STR | | | | | | | | | | | | |
| | 19 | 5 | 18'- 11" | 6W509 | 22 | | 2'- 3" | 14'- 5" | 2'- 3" | | | | 1'- 0" | 1'- 0" | 2'- 0" | 2'- 0" | |
| | 19 | 5 | 4'- 10" | 6W510 | 19 | | 2'- 5" | 2'- 5" | | | | | 1'- 11" | | 1'- 4" | | |
| | 41 | 7 | 10'- 6" | 6W701 | STR | | | | | | | | | | | | |
| | 21 | 7 | 12'- 10" | 6W702 | STR | | | | | | | | | | | | |
| ✳ | 22 | 8 | 14'- 3" | 6W801 | 17 | | 5'- 6" | 8'- 9" | | | | | | | | | |
| ▲ | 29 | 5 | 9'- 6" | 6W505.3 | STR | | | | | | | | | | | | |
| ▲ | 12 | 5 | 7'- 5" | 6W506.3 | 17 | | 2'- 5" | 2'- 7" | 2'- 5" | | | | | | | | |
| ▲ | 22 | 5 | 7'- 8" | 6W507.3 | STR | | | | | | | | | | | | |
| | 2 | 5 | 9'- 7" | 6W508.3 | 19 | | 0'- 10" | 8'- 9" | | | | | 0'- 6" | | 0'- 8" | | |
| | 28 | 5 | 4'- 10" | 6W511.3 | 19 | | 2'- 5" | 2'- 5" | | | | | 1'- 11" | | 1'- 4" | | |

| ITEM | EACH | SIZE | LENGTH | MARK | TYPE | A | B | C | D | E | F | G | H | J | K | R | O |
|---|---|---|---|---|---|---|---|---|---|---|---|---|---|---|---|---|---|

## ~ NOTES ~

1. UNLESS OTHERWISE DESIGNATED, ALL BAR REINFORCEMENT FOR CONCRETE IN SIZES UP TO AND INCLUDING NO. 18 SHALL CONFORM TO THE REQUIREMENTS OF THE "SPECIFICATIONS FOR DEFORMED BILLET-STEEL BARS FOR CONCRETE REINFORCEMENT", AASHTO M 31 (ASTM A 615-SI). ALL BARS SHALL BE GRADE 60, UNLESS OTHERWISE DESIGNATED.
2. FOR TYPICAL BENDING DETAILS, RECOMMENDED PIN DIAMETER "D" OF BENDS AND HOOKS, AND OTHER STANDARD PRACTICE, SEE CURRENT CONCRETE REINFORCING STEEL INSTITUTE "MANUAL OF STANDARD PRACTICE".
3. BARS WHICH REQUIRE MORE ACCURATE BENDING THAN STANDARD PRACTICES SHOULD HAVE LIMITS INDICATED.
4. ALL DIMENSIONS ARE OUT TO OUT OF BAR EXCEPT "A" AND "G" ON STANDARD 180 DEGREE AND 135 DEGREE HOOKS.
5. "J" DIMENSION ON 180 DEGREE HOOKS TO BE SHOWN ONLY WHERE NECESSARY TO RESTRICT HOOK SIZE. OTHERWISE, STANDARD HOOKS ARE TO BE USED.
6. "H" DIMENSION ON STIRRUPS TO BE SHOWN ONLY WHEN NECESSARY TO MAINTAIN CLEARANCES.
7. WHERE SLOPE DIFFERS FROM 45 DEGREES, DIMENSIONS "H" AND "K" MUST BE SHOWN.
8. ▲ DENOTES BARS TO BE CUT IN FIELD.
9. ✳ DENOTES ONE EXTRA BAR ADDED FOR TESTING PURPOSES.
10. △ DENOTES TWO EXTRA BARS ADDED FOR TESTING PURPOSES.
11. E IN BAR MARK PREFIX DENOTES EPOXY COATED REINFORCING STEEL.

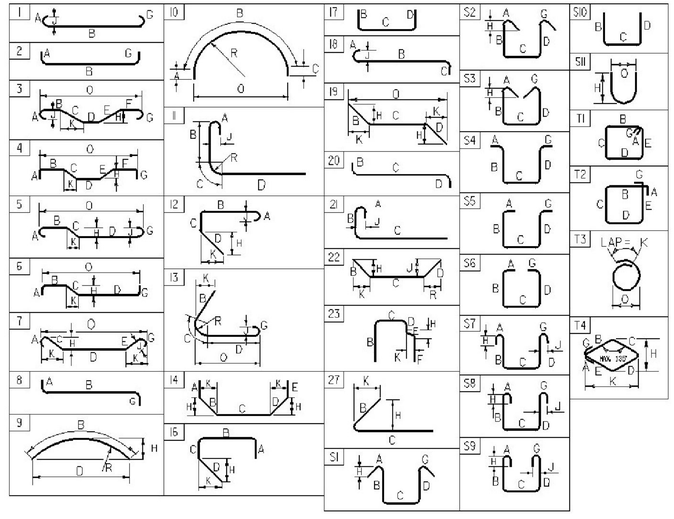


**ASTM STANDARD REINFORCING BARS**

| BAR SIZE DESIGNATION | WEIGHT POUNDS PER FOOT | NOMINAL DIMENSIONS ROUND SECTION DIAMETER INCHES | AREA INCHES$^2$ | PERIMETER INCHES |
|---|---|---|---|---|
| #3 | 0.376 | 0.375 | 0.11 | 1.178 |
| #4 | 0.668 | 0.500 | 0.20 | 1.571 |
| #5 | 1.043 | 0.625 | 0.31 | 1.963 |
| #6 | 1.502 | 0.750 | 0.44 | 2.356 |
| #7 | 2.044 | 0.875 | 0.60 | 2.749 |
| #8 | 2.670 | 1.000 | 0.79 | 3.142 |
| #9 | 3.400 | 1.128 | 1.00 | 3.544 |
| #10 | 4.303 | 1.270 | 1.27 | 3.990 |
| #11 | 5.313 | 1.410 | 1.56 | 4.430 |
| #14 | 7.65 | 1.693 | 2.25 | 5.32 |
| #18 | 13.60 | 2.257 | 4.00 | 7.09 |

| REVISION | DATE | DESCRIPTION | BY |
|---|---|---|---|
| ⚠1 | 01-07-2015 | REINFORCING STEEL SCHEDULE UPDATE, ADDED TEST BARS | WDL |

PROJECT NAME: **HARTFORD**
PROJECT NUMBER: **IM 091-2 (79)**

FILE NAME: **s12a132RSS_AB3.dgn** PLOT DATE: **1/7/2015**
PROJECT MANAGER: **K. HIGGINS** DRAWN BY: **G. LAROCHE**
DESIGNED BY: **G. LAROCHE** CHECKED BY: **W. LAMMER**
**REINFORCING STEEL SCHEDULE ABUTMENT 3** SHEET **129** OF **166**

STATE OF VERMONT
AGENCY OF TRANSPORTATION

# ⚠1 REINFORCING STEEL SCHEDULE

| ITEM | EACH | SIZE | LENGTH | MARK | TYPE | A | B | C | D | E | F | G | H | J | K | R | O |
|---|---|---|---|---|---|---|---|---|---|---|---|---|---|---|---|---|---|
| | **ABUTMENT 4:** | | | | | | | | | | | | | | | | |
| | 32 | 5 | 33'- 8" | 4A501 | STR | | | | | | | | | | | | |
| ✳ | 94 | 5 | 5'- 2" | 4A502 | STR | | | | | | | | | | | | |
| ▲ | 93 | 5 | 19'- 4" | 4A503 | STR | | | | | | | | | | | | |
| | 108 | 5 | 32'- 11" | 4A504 | STR | | | | | | | | | | | | |
| | 88 | 5 | 7'- 5" | 4A507 | 17 | | 2'- 5" | 2'- 7" | 2'- 5" | | | | | | | | |
| | 17 | 5 | 12'- 11" | 4A508 | 16 | 2'- 5" | 4'- 7" | 1'- 2" | 4'- 9" | | | | 1'- 0" | | 1'- 0" | | |
| ✳ | 133 | 7 | 8'- 6" | 4A701 | STR | | | | | | | | | | | | |
| ▲ | 83 | 7 | 19'- 4" | 4A702 | STR | | | | | | | | | | | | |
| ✳ | 84 | 8 | 14'- 4" | 4A801 | 17 | | 4'- 7" | 9'- 9" | | | | | | | | | |
| ✳ ▲ | 25 | 5 | 9'- 11" | 4A505.3 | STR | | | | | | | | | | | | |
| ▲ | 17 | 5 | 13'- 2" | 4A506.3 | 19 | | 4'- 9" | 8'- 5" | | | | | 1'- 0" | | 1'- 0" | | |
| | 24 | 5 | 6'- 5" | 4A509.3 | 17 | | 2'- 5" | 1'- 7" | 2'- 5" | | | | | | | | |
| | 22 | 5 | 6'- 8" | 4A510.3 | STR | | | | | | | | | | | | |
| ▲ | 18 | 5 | 7'- 9" | 4A511.3 | STR | | | | | | | | | | | | |
| | 2 | 5 | 5'- 3" | 4A512.3 | 19 | | 2'- 1" | 3'- 2" | | | | | 1'- 0" | | 1'- 9" | | |
| ✳ ▲ | 13 | 9 | 40'- 0" | 4A901.3 | STR | | | | | | | | | | | | |
| | **WW7:** | | | | | | | | | | | | | | | | |
| | 6 | 5 | 7'- 5" | 7W501 | 17 | | 2'- 5" | 2'- 7" | 2'- 5" | | | | | | | | |
| | 14 | 5 | 5'- 2" | 7W502 | STR | | | | | | | | | | | | |
| | 32 | 5 | 19'- 4" | 7W503 | STR | | | | | | | | | | | | |
| ▲ | 54 | 5 | 11'- 1" | 7W505 | STR | | | | | | | | | | | | |
| | 27 | 5 | 13'- 5" | 7W508 | 22 | | 2'- 5" | 8'- 7" | 2'- 5" | | | | 1'- 11" | 1'- 11" | 1'- 4" | 1'- 4" | |
| | 27 | 5 | 5'- 6" | 7W509 | 27 | | 2'- 9" | 2'- 9" | | | | | 2'- 6" | | 0'- 11" | | |
| | 24 | 5 | 6'- 5" | 7W504.3 | STR | | | | | | | | | | | | |
| ▲ | 12 | 5 | 7'- 9" | 7W506.3 | STR | | | | | | | | | | | | |
| | 12 | 5 | 7'- 5" | 7W507.3 | 17 | | 2'- 5" | 2'- 7" | 2'- 5" | | | | | | | | |
| | 18 | 5 | 5'- 6" | 7W510.3 | 27 | | 2'- 9" | 2'- 9" | | | | | 2'- 6" | | 0'- 11" | | |
| | **WW8:** | | | | | | | | | | | | | | | | |
| | 16 | 5 | 12'- 6" | 8W501 | STR | | | | | | | | | | | | |
| | 17 | 5 | 5'- 2" | 8W502 | STR | | | | | | | | | | | | |
| | 17 | 5 | 15'- 4" | 8W503 | STR | | | | | | | | | | | | |
| | 44 | 5 | 11'- 9" | 8W504 | STR | | | | | | | | | | | | |
| | 24 | 5 | 21'- 3" | 8W509 | 22 | | 2'- 3" | 16'- 9" | 2'- 3" | | | | 0'- 10" | 0'- 10" | 2'- 1" | 2'- 1" | |
| | 24 | 5 | 4'- 8" | 8W510 | 19 | | 2'- 4" | 2'- 4" | | | | | 1'- 0" | | 1'- 0" | | |
| | 27 | 7 | 8'- 6" | 8W701 | STR | | | | | | | | | | | | |
| | 22 | 7 | 15'- 4" | 8W702 | STR | | | | | | | | | | | | |
| | 22 | 8 | 13'- 4" | 8W801 | 17 | | 4'- 7" | 8'- 9" | | | | | | | | | |
| ▲ | 29 | 5 | 9'- 5" | 8W505.3 | STR | | | | | | | | | | | | |
| | 13 | 5 | 7'- 5" | 8W506.3 | 17 | | 2'- 5" | 2'- 7" | 2'- 5" | | | | | | | | |
| ▲ | 22 | 5 | 7'- 7" | 8W507.3 | STR | | | | | | | | | | | | |
| | 2 | 5 | 7'- 11" | 8W508.3 | 19 | | 0'- 7" | 7'- 4" | | | | | 0'- 2" | | 0'- 6" | | |
| | 16 | 5 | 4'- 8" | 8W511.3 | 19 | | 2'- 4" | 2'- 4" | | | | | 1'- 0" | | 1'- 0" | | |

| ITEM | EACH | SIZE | LENGTH | MARK | TYPE | A | B | C | D | E | F | G | H | J | K | R | O |
|---|---|---|---|---|---|---|---|---|---|---|---|---|---|---|---|---|---|

## ~ NOTES ~

1. UNLESS OTHERWISE DESIGNATED, ALL BAR REINFORCEMENT FOR CONCRETE IN SIZES UP TO AND INCLUDING NO. 18 SHALL CONFORM TO THE REQUIREMENTS OF THE "SPECIFICATIONS FOR DEFORMED BILLET-STEEL BARS FOR CONCRETE REINFORCEMENT", AASHTO M 31 (ASTM A 615-SI). ALL BARS SHALL BE GRADE 60, UNLESS OTHERWISE DESIGNATED.
2. FOR TYPICAL BENDING DETAILS, RECOMMENDED PIN DIAMETER "D" OF BENDS AND HOOKS, AND OTHER STANDARD PRACTICE, SEE CURRENT CONCRETE REINFORCING STEEL INSTITUTE "MANUAL OF STANDARD PRACTICE".
3. BARS WHICH REQUIRE MORE ACCURATE BENDING THAN STANDARD PRACTICES SHOULD HAVE LIMITS INDICATED.
4. ALL DIMENSIONS ARE OUT TO OUT OF BAR EXCEPT "A" AND "G" ON STANDARD 180 DEGREE AND 135 DEGREE HOOKS.
5. "J" DIMENSION ON 180 DEGREE HOOKS TO BE SHOWN ONLY WHERE NECESSARY TO RESTRICT HOOK SIZE. OTHERWISE, STANDARD HOOKS ARE TO BE USED.
6. "H" DIMENSION ON STIRRUPS TO BE SHOWN ONLY WHEN NECESSARY TO MAINTAIN CLEARANCES.
7. WHERE SLOPE DIFFERS FROM 45 DEGREES, DIMENSIONS "H" AND "K" MUST BE SHOWN.
8. ▲ DENOTES BARS TO BE CUT IN FIELD.
9. ✳ DENOTES ONE EXTRA BAR ADDED FOR TESTING PURPOSES.
10. △ DENOTES TWO EXTRA BARS ADDED FOR TESTING PURPOSES.
11. E IN BAR MARK PREFIX DENOTES EPOXY COATED REINFORCING STEEL.

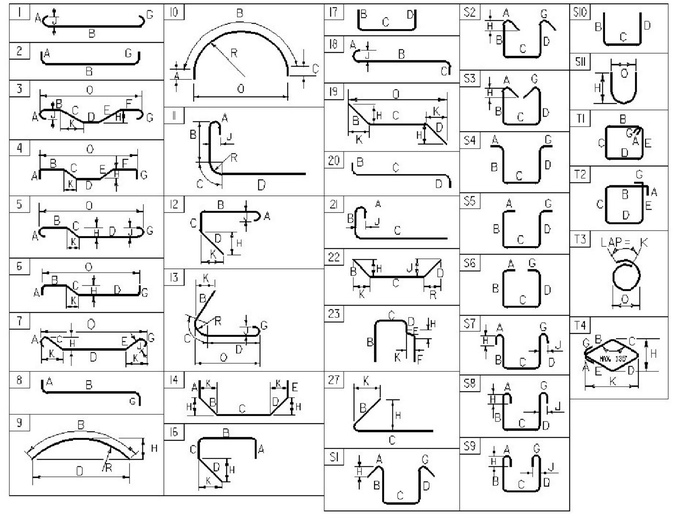


**ASTM STANDARD REINFORCING BARS**

| BAR SIZE DESIGNATION | WEIGHT POUNDS PER FOOT | NOMINAL DIMENSIONS ROUND SECTION DIAMETER INCHES | AREA INCHES$^2$ | PERIMETER INCHES |
|---|---|---|---|---|
| #3 | 0.376 | 0.375 | 0.11 | 1.178 |
| #4 | 0.668 | 0.500 | 0.20 | 1.571 |
| #5 | 1.043 | 0.625 | 0.31 | 1.963 |
| #6 | 1.502 | 0.750 | 0.44 | 2.356 |
| #7 | 2.044 | 0.875 | 0.60 | 2.749 |
| #8 | 2.670 | 1.000 | 0.79 | 3.142 |
| #9 | 3.400 | 1.128 | 1.00 | 3.544 |
| #10 | 4.303 | 1.270 | 1.27 | 3.990 |
| #11 | 5.313 | 1.410 | 1.56 | 4.430 |
| #14 | 7.65 | 1.693 | 2.25 | 5.32 |
| #18 | 13.60 | 2.257 | 4.00 | 7.09 |

| REVISION | DATE | DESCRIPTION | BY |
|---|---|---|---|
| ⚠1 | 01-07-2015 | REINFORCING STEEL SCHEDULE UPDATE, ADDED TEST BARS | WDL |

PROJECT NAME: **HARTFORD**
PROJECT NUMBER: **IM 091-2 (79)**

FILE NAME: **s12a132RSS_AB4.dgn** PLOT DATE: **1/7/2015**
PROJECT MANAGER: **K. HIGGINS** DRAWN BY: **G. LAROCHE**
DESIGNED BY: **G. LAROCHE** CHECKED BY: **J. GRIGAS**
**REINFORCING STEEL SCHEDULE ABUTMENT 4** SHEET **130** OF **166**

STATE OF VERMONT
AGENCY OF TRANSPORTATION

# ⚠ REINFORCING STEEL SCHEDULE

| ITEM | EACH | SIZE | LENGTH | MARK | TYPE | A | B | C | D | E | F | G | H | J | K | R | O |
|---|---|---|---|---|---|---|---|---|---|---|---|---|---|---|---|---|---|
| | 30 | 5 | 8'- 6" | 1R501A | STR | | | | | | | | | | | | |
| | 14 | 5 | 9'- 6" | 1R501B | STR | | | | | | | | | | | | |
| | 29 | 5 | 4'- 2" | 1R502 | STR | | | | | | | | | | | | |
| | 36 | 5 | 7'- 6" | 1R503 | STR | | | | | | | | | | | | |
| | 20 | 5 | 7'- 9" | 1R504 | S10 | | 3'- 7" | 4'- 2" | --- | | | | | | | | |
| ▲ | 9 | 5 | 19'- 4" | 1R505A | STR | | | | | | | | | | | | |
| ▲ | 9 | 5 | 14'- 0" | 1R505B | STR | | | | | | | | | | | | |
| ▲ | 11 | 5 | 8'- 7" | 1R505C | STR | | | | | | | | | | | | |
| ▲ | 9 | 5 | 14'- 0" | 1R506A | STR | | | | | | | | | | | | |
| ▲ | 11 | 5 | 8'- 7" | 1R506B | STR | | | | | | | | | | | | |
| ▲ | 26 | 5 | 25'- 6" | 1R507A | STR | | | | | | | | | | | | |
| | 2 | 5 | 26'- 6" | 1R507B | STR | | | | | | | | | | | | |
| | 10 | 5 | 8'- 7" | 1R508 | 19 | | 2'- 2" | 4'- 3" | 2'- 2" | | | | 1'- 7" | | 1'- 7" | | 7'- 3" |
| | 18 | 5 | 7'- 4" | 1R509 | 20 | | 2'- 2" | 3'- 0" | 2'- 2" | | | | | | | | |
| | 29 | 5 | 5'- 11" | 1R510 | S10 | | 2'- 2" | 1'- 7" | 2'- 2" | | | | | | | | |
| | | | | | | | | | | | | | | | | | |
| | 16 | 7 | 8'- 0" | 1R701 | S10 | | 3'- 7" | 4'- 5" | --- | | | | | | | | |
| ▲ | 16 | 7 | 19'- 4" | 1R702 | STR | | | | | | | | | | | | |
| | | | | | | | | | | | | | | | | | |
| | 16 | 8 | 9'- 6" | 1R801 | STR | | | | | | | | | | | | |
| | | | | | | | | | | | | | | | | | |
| | 32 | 5 | 8'- 6" | 2R501A | STR | | | | | | | | | | | | |
| | 14 | 5 | 12'- 6" | 2R501B | STR | | | | | | | | | | | | |
| | 32 | 5 | 4'- 2" | 2R502 | STR | | | | | | | | | | | | |
| | 14 | 5 | 7'- 6" | 2R503 | STR | | | | | | | | | | | | |
| | 14 | 5 | 7'- 9" | 2R504 | S10 | | 3'- 7" | 4'- 2" | --- | | | | | | | | |
| | 9 | 5 | 16'- 7" | 2R505A | STR | | | | | | | | | | | | |
| | 9 | 5 | 12'- 1" | 2R505B | STR | | | | | | | | | | | | |
| | 14 | 5 | 7'- 7" | 2R505C | STR | | | | | | | | | | | | |
| | 14 | 5 | 7'- 7" | 2R506 | STR | | | | | | | | | | | | |
| | 10 | 5 | 7'- 6" | 2R507A | STR | | | | | | | | | | | | |
| | 10 | 5 | 15'- 6" | 2R507B | STR | | | | | | | | | | | | |
| | 18 | 5 | 28'- 6" | 2R507C | STR | | | | | | | | | | | | |
| | 10 | 5 | 10'- 9" | 2R508 | 19 | | 2'- 2" | 6'- 5" | 2'- 2" | | | | 1'- 7" | | 1'- 7" | | 9'- 5" |
| | 20 | 5 | 8'- 10" | 2R509 | 20 | | 2'- 2" | 4'- 6" | 2'- 2" | | | | | | | | |
| | 32 | 5 | 5'- 11" | 2R510 | S10 | | 2'- 2" | 1'- 7" | 2'- 2" | | | | | | | | |
| | | | | | | | | | | | | | | | | | |
| ✳ | 33 | 6 | 8'- 2" | 2R601 | S10 | | 3'- 7" | 4'- 7" | --- | | | | | | | | |
| | 16 | 6 | 16'- 7" | 2R602A | STR | | | | | | | | | | | | |
| | 16 | 6 | 12'- 1" | 2R602B | STR | | | | | | | | | | | | |
| | | | | | | | | | | | | | | | | | |
| | 32 | 7 | 9'- 6" | 2R701 | STR | | | | | | | | | | | | |
| | | | | | | | | | | | | | | | | | |
| | 16 | 5 | 8'- 6" | 3R501A | STR | | | | | | | | | | | | |
| | 14 | 5 | 12'- 6" | 3R501B | STR | | | | | | | | | | | | |
| | 23 | 5 | 4'- 2" | 3R502 | STR | | | | | | | | | | | | |
| | 26 | 5 | 7'- 6" | 3R503 | STR | | | | | | | | | | | | |
| | 14 | 5 | 7'- 9" | 3R504 | S10 | | 3'- 7" | 4'- 2" | --- | | | | | | | | |
| ▲ | 9 | 5 | 19'- 1" | 3R505A | STR | | | | | | | | | | | | |
| ▲ | 14 | 5 | 12'- 11" | 3R505B | STR | | | | | | | | | | | | |
| ▲ | 14 | 5 | 12'- 11" | 3R506 | STR | | | | | | | | | | | | |
| ▲ | 32 | 5 | 20'- 6" | 3R507A | STR | | | | | | | | | | | | |
| | 2 | 5 | 22'- 2" | 3R507B | STR | | | | | | | | | | | | |
| | 5 | 5 | 8'- 7" | 3R508 | 19 | | 2'- 2" | 4'- 3" | 2'- 2" | | | | 1'- 7" | | 1'- 7" | | 7'- 4" |
| | 9 | 5 | 7'- 4" | 3R509 | 20 | | 2'- 2" | 3'- 0" | 2'- 2" | | | | | | | | |
| | 23 | 5 | 5'- 11" | 3R510 | S10 | | 2'- 2" | 1'- 7" | 2'- 2" | | | | | | | | |
| | | | | | | | | | | | | | | | | | |
| | 16 | 7 | 9'- 0" | 3R701 | S10 | | 3'- 7" | 5'- 5" | --- | | | | | | | | |
| | 16 | 7 | 19'- 1" | 3R702 | STR | | | | | | | | | | | | |
| | | | | | | | | | | | | | | | | | |
| ▲ | 16 | 8 | 9'- 6" | 3R801 | STR | | | | | | | | | | | | |
| | | | | | | | | | | | | | | | | | |
| | 34 | 5 | 8'- 6" | 4R501A | STR | | | | | | | | | | | | |
| | 15 | 5 | 12'- 6" | 4R501B | STR | | | | | | | | | | | | |
| | 32 | 5 | 4'- 2" | 4R502 | STR | | | | | | | | | | | | |
| | 14 | 5 | 7'- 9" | 4R504 | S10 | | 3'- 7" | 4'- 2" | --- | | | | | | | | |
| ▲ | 9 | 5 | 17'- 8" | 4R505A | STR | | | | | | | | | | | | |
| ▲ | 9 | 5 | 13'- 3" | 4R505B | STR | | | | | | | | | | | | |
| ▲ | 14 | 5 | 8'- 9" | 4R505C | STR | | | | | | | | | | | | |
| ▲ | 14 | 5 | 8'- 9" | 4R506 | STR | | | | | | | | | | | | |
| | 10 | 5 | 7'- 6" | 4R507A | STR | | | | | | | | | | | | |
| | 10 | 5 | 15'- 6" | 4R507B | STR | | | | | | | | | | | | |
| | 22 | 5 | 28'- 6" | 4R507C | STR | | | | | | | | | | | | |
| | 10 | 5 | 10'- 0" | 4R508 | 19 | | 2'- 2" | 5'- 8" | 2'- 2" | | | | 1'- 7" | | 1'- 7" | | 8'- 9" |
| | 22 | 5 | 8'- 4" | 4R509 | 20 | | 2'- 2" | 4'- 0" | 2'- 2" | | | | | | | | |
| | 32 | 5 | 5'- 11" | 4R510 | S10 | | 2'- 2" | 1'- 7" | 2'- 2" | | | | | | | | |
| | | | | | | | | | | | | | | | | | |
| | 32 | 6 | 8'- 2" | 4R601 | S10 | | 3'- 7" | 4'- 7" | --- | | | | | | | | |
| ▲ | 16 | 6 | 17'- 8" | 4R602A | STR | | | | | | | | | | | | |
| ▲ | 16 | 6 | 13'- 3" | 4R602B | STR | | | | | | | | | | | | |
| | 14 | 6 | 7'- 6" | 4R603 | STR | | | | | | | | | | | | |
| | | | | | | | | | | | | | | | | | |
| | 32 | 8 | 10'- 6" | 4R801 | STR | | | | | | | | | | | | |
| | | | | | | | | | | | | | | | | | |
| | 32 | 5 | 8'- 6" | 5R501A | STR | | | | | | | | | | | | |
| | 14 | 5 | 5'- 6" | 5R501B | STR | | | | | | | | | | | | |
| | 25 | 5 | 4'- 2" | 5R502 | STR | | | | | | | | | | | | |
| | 32 | 5 | 9'- 6" | 5R503A | STR | | | | | | | | | | | | |
| | 12 | 5 | 7'- 6" | 5R503B | STR | | | | | | | | | | | | |
| | 12 | 5 | 7'- 9" | 5R504 | S10 | | 3'- 7" | 4'- 2" | --- | | | | | | | | |
| ▲ | 9 | 5 | 14'- 4" | 5R505A | STR | | | | | | | | | | | | |
| ▲ | 9 | 5 | 10'- 7" | 5R505B | STR | | | | | | | | | | | | |
| ▲ | 7 | 5 | 6'- 10" | 5R505C | STR | | | | | | | | | | | | |
| | 12 | 5 | 6'- 10" | 5R506 | STR | | | | | | | | | | | | |

| ITEM | EACH | SIZE | LENGTH | MARK | TYPE | A | B | C | D | E | F | G | H | J | K | R | O |
|---|---|---|---|---|---|---|---|---|---|---|---|---|---|---|---|---|---|
| | 8 | 5 | 7'- 6" | 5R507A | STR | | | | | | | | | | | | |
| | 8 | 5 | 15'- 6" | 5R507B | STR | | | | | | | | | | | | |
| | 16 | 5 | 21'- 6" | 5R507C | STR | | | | | | | | | | | | |
| | 10 | 5 | 9'- 3" | 5R508 | 19 | | 2'- 2" | 4'- 11" | 2'- 2" | | | | | 1'- 7" | | 1'- 7" | 8'- 0" |
| | 20 | 5 | 7'- 10" | 5R509 | 20 | | 2'- 2" | 3'- 6" | 2'- 2" | | | | | | | | |
| | 25 | 5 | 5'- 11" | 5R510 | S10 | | 2'- 2" | 1'- 7" | 2'- 2" | | | | | | | | |
| | | | | | | | | | | | | | | | | | |
| ✳ | 33 | 6 | 8'- 2" | 5R601 | S10 | | 3'- 7" | 4'- 7" | | | | | | | | | |
| ▲ | 16 | 6 | 14'- 4" | 5R602A | STR | | | | | | | | | | | | |
| ▲ | 16 | 6 | 10'- 7" | 5R602B | STR | | | | | | | | | | | | |
| | | | | | | | | | | | | | | | | | |
| ▲ | 47 | 5 | 6'- 6" | 6R501A | STR | | | | | | | | | | | | |
| | 2 | 5 | 7'- 0" | 6R501B | STR | | | | | | | | | | | | |
| | 8 | 5 | 4'- 2" | 6R502 | STR | | | | | | | | | | | | |
| ▲ | 22 | 5 | 8'- 11" | 6R503 | STR | | | | | | | | | | | | |
| | 14 | 5 | 7'- 9" | 6R504 | S10 | | 3'- 7" | 4'- 2" | --- | | | | | | | | |
| | 8 | 5 | 5'- 11" | 6R505 | S10 | | 2'- 2" | 1'- 7" | 2'- 2" | | | | | | | | |
| | | | | | | | | | | | | | | | | | |
| | 32 | 5 | 8'- 6" | 7R501A | STR | | | | | | | | | | | | |
| | 14 | 5 | 10'- 6" | 7R501B | STR | | | | | | | | | | | | |
| | 30 | 5 | 4'- 2" | 7R502 | STR | | | | | | | | | | | | |
| | 22 | 5 | 8'- 0" | 7R503 | STR | | | | | | | | | | | | |
| | 22 | 5 | 7'- 9" | 7R504 | S10 | | 3'- 7" | 4'- 2" | --- | | | | | | | | |
| | 9 | 5 | 16'- 8" | 7R505A | STR | | | | | | | | | | | | |
| | 9 | 5 | 12'- 4" | 7R505B | STR | | | | | | | | | | | | |
| | 12 | 5 | 7'- 11" | 7R505C | STR | | | | | | | | | | | | |
| | 22 | 5 | 7'- 11" | 7R506 | STR | | | | | | | | | | | | |
| | 10 | 5 | 7'- 6" | 7R507A | STR | | | | | | | | | | | | |
| | 10 | 5 | 15'- 6" | 7R507B | STR | | | | | | | | | | | | |
| | 20 | 5 | 26'- 6" | 7R507C | STR | | | | | | | | | | | | |
| | 10 | 5 | 10'- 0" | 7R508 | 19 | | 2'- 2" | 5'- 8" | 2'- 2" | | | | | 1'- 7" | | 1'- 7" | 8'- 9" |
| | 20 | 5 | 8'- 4" | 7R509 | 20 | | 2'- 2" | 4'- 0" | 2'- 2" | | | | | | | | |
| | 30 | 5 | 5'- 11" | 7R510 | S10 | | 2'- 2" | 1'- 7" | 2'- 2" | | | | | | | | |
| | | | | | | | | | | | | | | | | | |
| | 32 | 6 | 9'- 6" | 7R601 | STR | | | | | | | | | | | | |
| | | | | | | | | | | | | | | | | | |
| | 32 | 8 | 10'- 1" | 7R801 | S10 | | 3'- 7" | 6'- 6" | --- | | | | | | | | |
| | 16 | 8 | 16'- 8" | 7R802A | STR | | | | | | | | | | | | |
| | 16 | 8 | 12'- 4" | 7R802B | STR | | | | | | | | | | | | |
| | | | | | | | | | | | | | | | | | |
| | 44 | 5 | 8'- 6" | 8R501A | STR | | | | | | | | | | | | |
| | 14 | 5 | 10'- 6" | 8R501B | STR | | | | | | | | | | | | |
| | 9 | 5 | 5'- 2" | 8R502A | STR | | | | | | | | | | | | |
| | 30 | 5 | 4'- 2" | 8R502B | STR | | | | | | | | | | | | |
| | 54 | 5 | 7'- 6" | 8R503 | STR | | | | | | | | | | | | |
| | 30 | 5 | 7'- 9" | 8R504 | S10 | | 3'- 7" | 4'- 2" | --- | | | | | | | | |
| ▲ | 9 | 5 | 17'- 11" | 8R505A | STR | | | | | | | | | | | | |
| ▲ | 9 | 5 | 15'- 3" | 8R505B | STR | | | | | | | | | | | | |
| ▲ | 9 | 5 | 11'- 7" | 8R505C | STR | | | | | | | | | | | | |
| ▲ | 12 | 5 | 8'- 0" | 8R505D | STR | | | | | | | | | | | | |
| ▲ | 16 | 5 | 15'- 3" | 8R506A | STR | | | | | | | | | | | | |
| ▲ | 16 | 5 | 11'- 7" | 8R506B | STR | | | | | | | | | | | | |
| ▲ | 22 | 5 | 8'- 0" | 8R506C | STR | | | | | | | | | | | | |
| ▲ | 8 | 5 | 15'- 6" | 8R507A | STR | | | | | | | | | | | | |
| | 6 | 5 | 23'- 6" | 8R507B | STR | | | | | | | | | | | | |
| ▲ | 26 | 5 | 34'- 6" | 8R507C | STR | | | | | | | | | | | | |
| | 2 | 5 | 35'- 3" | 8R507D | STR | | | | | | | | | | | | |
| | 15 | 5 | 7'- 2" | 8R508 | 19 | | 2'- 2" | 2'- 10" | 2'- 2" | | | | | 1'- 7" | | 1'- 7" | 5'- 8" |
| | 11 | 5 | 5'- 4" | 8R509A | 20 | | 2'- 2" | 1'- 0" | 2'- 2" | | | | | | | | |
| | 18 | 5 | 6'- 4" | 8R509B | 20 | | 2'- 2" | 2'- 0" | 2'- 2" | | | | | | | | |
| | 39 | 5 | 5'- 11" | 8R510 | S10 | | 2'- 2" | 1'- 7" | 2'- 2" | | | | | | | | |
| | | | | | | | | | | | | | | | | | |
| | 16 | 6 | 9'- 6" | 8R601 | STR | | | | | | | | | | | | |
| | | | | | | | | | | | | | | | | | |
| | 16 | 7 | 10'- 0" | 8R701 | S10 | | 3'- 7" | 6'- 5" | --- | | | | | | | | |
| ▲ | 16 | 7 | 17'- 11" | 8R702 | STR | | | | | | | | | | | | |

## ~ NOTES ~

1. UNLESS OTHERWISE DESIGNATED, ALL BAR REINFORCEMENT FOR CONCRETE IN SIZES UP TO AND INCLUDING NO. 18 SHALL CONFORM TO THE REQUIREMENTS OF THE "SPECIFICATIONS FOR DEFORMED BILLET-STEEL BARS FOR CONCRETE REINFORCEMENT", AASHTO M 31 (ASTM A 615-SI). ALL BARS SHALL BE GRADE 60, UNLESS OTHERWISE DESIGNATED.
2. FOR TYPICAL BENDING DETAILS, RECOMMENDED PIN DIAMETER "D" OF BENDS AND HOOKS, AND OTHER STANDARD PRACTICE, SEE CURRENT CONCRETE REINFORCING STEEL INSTITUTE "MANUAL OF STANDARD PRACTICE".
3. BARS WHICH REQUIRE MORE ACCURATE BENDING THAN STANDARD PRACTICES SHOULD HAVE LIMITS INDICATED.
4. ALL DIMENSIONS ARE OUT TO OUT OF BAR EXCEPT "A" AND "G" ON STANDARD 180 DEGREE AND 135 DEGREE HOOKS.
5. "J" DIMENSION ON 180 DEGREE HOOKS TO BE SHOWN ONLY WHERE NECESSARY TO RESTRICT HOOK SIZE. OTHERWISE, STANDARD HOOKS ARE TO BE USED.
6. "H" DIMENSION ON STIRRUPS TO BE SHOWN ONLY WHEN NECESSARY TO MAINTAIN CLEARANCES.
7. WHERE SLOPE DIFFERS FROM 45 DEGREES, DIMENSIONS "H" AND "K" MUST BE SHOWN.
8. ▲ DENOTES BARS TO BE CUT IN FIELD.
9. ✳ DENOTES ONE EXTRA BAR ADDED FOR TESTING PURPOSES.
10. △ DENOTES TWO EXTRA BARS ADDED FOR TESTING PURPOSES.
11. E IN BAR MARK PREFIX DENOTES EPOXY COATED REINFORCING STEEL.

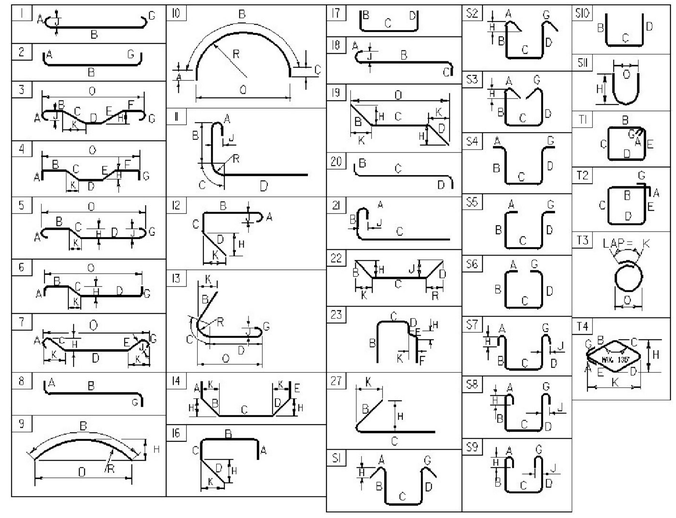


## ASTM STANDARD REINFORCING BARS

| | | | | |
|---|---|---|---|---|
| #3 | 0.376 | 0.375 | 0.11 | 1.178 |
| #4 | 0.668 | 0.500 | 0.20 | 1.571 |
| #5 | 1.043 | 0.625 | 0.31 | 1.963 |
| #6 | 1.502 | 0.750 | 0.44 | 2.356 |
| #7 | 2.04 | 0.875 | 0.60 | 2.749 |
| #8 | 2.670 | 1.000 | 0.79 | 3.14 |
| #9 | 3.400 | 1.13 | 1.00 | 3.54 |
| #10 | 4.3 | 1.270 | 1.27 | 3.990 |
| #11 | 5.31 | 1.410 | 1.56 | 4.430 |
| #14 | 7.65 | 1.69 | 2.25 | 5.32 |
| #18 | 13.60 | 2.26 | 4.00 | 7.09 |

## ~ REINFORCING STEEL CORROSION RESISTANCE LEVEL ~

THE REINFORCING STEEL MARKS IN THIS SCHEDULE INDICATE THE REQUIRED BAR CORROSION RESISTANCE LEVEL. CORROSION RESISTANCE LEVEL IS DENOTED WITH A .2 FOR LEVEL TWO SUFFIX OR .3 FOR LEVEL THREE SUFFIX, .1 FOR LEVEL ONE IS TO BE OMITTED. THE BAR MATERIAL TYPE AND BAR STEEL GRADE PROVIDED FOR EACH CORROSION LEVEL WILL BE RECORDED ON THE PLAN SET PI SHEET FOR AS-BUILT RECORD PLAN ARCHIVES.

| REVISION | DATE | DESCRIPTION | BY |
|---|---|---|---|
| ⚠ | 01-07-2015 | REINFORCING STEEL SCHEDULE UPDATE, ADDED TEST BARS | WDL |

PROJECT NAME: **HARTFORD**
PROJECT NUMBER: **IM 091-2 (79)**

FILE NAME: **s12a132RSS_RetWalls.dgn**
PROJECT MANAGER: **K. HIGGINS**
DESIGNED BY: **W. LAMMER**
**REINFORCING STEEL SCHEDULE RET WALLS**

PLOT DATE: **1/7/2015**
DRAWN BY: **K. FRIEDLAND**
CHECKED BY: **W. LAMMER**
SHEET **131** OF **166**

# EPSC PLAN NARRATIVE

## 1.1 PROJECT DESCRIPTION

THIS PROJECT INVOLVES THE REMOVAL OF BRIDGE 43N AND 43S ON INTERSTATE 91 OVER US-5 AND LOCATED IN THE TOWN OF HARTFORD, VT. BRIDGES 43N AND 43S WILL BE REPLACED WITH SINGLE SPAN BRIDGES. BOTH BRIDGES WILL BE BUILT ON THE EXISTING ALIGNMENT. BRIDGE 43N AND 43S WILL BOTH BE APPROXIMATELY 136 FEET IN LENGTH.

NOTE: AREA OF DISTURBANCE INCLUDES LIMITS OF EARTH DISTURBANCE WITHIN THE PROJECT AREA, AS WELL AS WASTE, BORROW AND STAGING AREAS, AND OTHER EARTH DISTURBING ACTIVITIES WITHIN OR DIRECTLY ADJACENT TO THE PROJECT LIMITS AS SHOWN ON THE ATTACHED EPSC PLAN.

TOTAL AREA OF DISTURBANCE AS SHOWN ON THE ATTACHED EPSC PLAN IS APPROXIMATELY 4.63 ACRES.

IT IS ANTICIPATED THAT THIS PROJECT WILL LAST ONE CONSTRUCTION SEASON.

## 1.2 SITE INVENTORY

### 1.2.1 TOPOGRAPHY

THE TOPOGRAPHY OF THE AREA IS SLOPING OPEN GROUND WITH SOME AREAS THAT ARE GENTLY SLOPING TO NEARLY FLAT. INTERSTATE 91 AND US-5 ARE RELATIVELY FLAT BUT WITH SLOPING AREAS BETWEEN THE TWO CORRIDORS.

### 1.2.2 DRAINAGE, WATERWAYS, BODIES OF WATER, AND PROXIMITY TO NATURAL OR MAN-MADE WATER FEATURES

THERE ARE NUMEROUS EXISTING AND PROPOSED DRAINAGE SYSTEMS WITHIN THE PROJECT LIMITS, INCLUDING CULVERTS, DROP INLETS, STONE LINED DITCHES AND GRASS SWALES. SOME CULVERTS AND DRAINAGE DITCHES WITHIN THE PROJECT LIMITS DRAIN TO AN EXISTING STORM WATER RETENTION POND OUTSIDE OF THE PROJECT LIMITS. FOR DETAILS SEE THE DRAINAGE LAYOUT SHEET.

### 1.2.3 VEGETATION

THE VEGETATION IN THE PROJECT AREA CONSISTS OF MOWED GRASSES.

### 1.2.4 SOILS

ALL SOIL DATA CAME FROM THE U.S. DEPARTMENT OF AGRICULTURE SOIL CONSERVATION SERVICE FOR THE COUNTY OF WINDSOR, VERMONT.

| | | |
|---|---|---|
| GLOVER VERSHIRE COMPLEX | 15% - 35% SLOPES | "K" FACTOR = 0.32 - 0.28 |
| URBAN LAND WINDSOR-AGAWAM COMPLEX | 0% - 8% SLOPES | "K" FACTOR = 0.17 - 0.28 |

**NOTE**: K-VALUES GENERALLY INDICATE THE FOLLOWING:
0.0-0.23 = LOW EROSION POTENTIAL
0.24-0.36 = MODERATE EROSION POTENTIAL
0.37 AND HIGHER = HIGH EROSION POTENTIAL

### 1.2.5 SENSITIVE RESOURCE AREAS

CRITICAL HABITATS: NO
HISTORICAL OR ARCHEOLOGICAL AREAS: NO
PRIME AGRICULTURAL LAND: NO
THREATENED AND ENDANGERED SPECIES: NO
WATER RESOURCE: NO
WETLANDS: NO

## 1.3 RISK EVALUATION

THIS PROJECT FALLS UNDER THE JURISDICTION OF GENERAL PERMIT 3-9020 FOR STORMWATER RUNOFF FROM CONSTRUCTION SITES FOR LOW RISK PROJECTS. ANY MODIFICATIONS TO THE PROJECT THAT INCREASE THE RISK TO ENVIRONMENTAL RESOURCES SHALL BE EVALUATED IN ACCORDANCE WITH THE PERMIT REQUIREMENTS. THE CONTRACTOR WILL BE RESPONSIBLE FOR ANY ADDITIONAL PERMITTING.

## 1.4 EROSION PREVENTION AND SEDIMENT CONTROL

THE EROSION CONTROL PLANS ARE MEANT AS A GUIDELINE FOR PREVENTING EROSION AND CONTROLLING SEDIMENT TRANSPORT. THE PRINCIPLES OUTLINED IN THIS NARRATIVE CONSIST OF APPLYING MEASURES THROUGHOUT CONSTRUCTION OF THE PROJECT IN ORDER TO MINIMIZE SEDIMENT TRANSPORT TO THE RECEIVING WATERS. THE MEASURES INCLUDE STABILIZATION AND STRUCTURAL PRACTICES, STORM WATER CONTROLS AND OTHER POLLUTION PREVENTION PRACTICES. THEY HAVE BEEN PROPOSED BY THE DESIGNER AS A BASIS FOR PROTECTING RESOURCES AND WILL NEED TO BE BUILT UPON BASED ON THE SPECIFIC MEANS AND METHODS OF THE CONTRACTOR. REFER TO THE LOW RISK SITE HANDBOOK AND APPROPRIATE DETAIL SHEETS FOR SPECIFIC GUIDANCE AND CONSTRUCTION DETAILING.

ALL MEASURES SHALL BE REGULARLY MAINTAINED AND SHALL BE CHECKED FOR SEDIMENT BUILD-UP. SEDIMENT SHALL BE DISPOSED OF AT AN APPROVED SITE WHERE IT WILL NOT BE SUBJECT TO EROSION.

### 1.4.1 MARK SITE BOUNDARIES

SITE BOUNDARIES AND AREAS CONSTRUCTION EQUIPMENT CAN ACCESS SHALL BE DELINEATED.

BARRIER FENCE (BF) SHALL BE USED TO PHYSICALLY MARK SITE BOUNDARIES.

### 1.4.2 LIMIT DISTURBANCE AREA

PREVENTING INITIAL SOIL EROSION BY MINIMIZING THE EXPOSED AREA IS MUCH MORE EFFECTIVE THAN TREATING ERODED SEDIMENT. EARTH DISTURBANCE CAN BE MINIMIZED THROUGH CONSTRUCTION PHASING BY ONLY OPENING UP EARTH AS NECESSARY. THIS CAN LIMIT THE AREA THAT WILL BE DISTURBED AND EXPOSED TO EROSION. EMPLOY TEMPORARY CONSTRUCTION STABILIZATION PRACTICES IN INCREMENTAL STAGES AS PHASES CHANGE. FOR PROJECTS WHICH FALL UNDER THE CONSTRUCTION GENERAL PERMIT, ONLY THE ACREAGE LISTED ON THE PERMIT AUTHORIZATION MAY BE EXPOSED AT ANY GIVEN TIME.

MAINTAINING VEGETATED BUFFERS ALONG STREAM BANKS, WETLANDS OR OTHER SENSITIVE AREAS IS A CRUCIAL EROSION AND SEDIMENT CONTROL MEASURE THAT SHOULD BE ESTABLISHED WHEREVER POSSIBLE.

### 1.4.3 SITE ENTRANCE/EXIT STABILIZATION

TRACKING OF SEDIMENT ONTO PUBLIC HIGHWAYS SHALL BE MINIMIZED TO REDUCE THE POTENTIAL FOR RUNOFF ENTERING RECEIVING WATERS. INSTALLATION SHALL COINCIDE WITH THE CONTRACTORS PROGRESS SCHEDULE.

STABILIZED CONSTRUCTION ENTRANCES SHALL BE INSTALLED AS PROPOSED ON THE EPSC PLAN AND ANYWHERE EQUIPMENT WILL BE GOING FROM AREAS OF EXPOSED SOILS TO PAVED SURFACES.

### 1.4.4 INSTALL SEDIMENT BARRIERS

SEDIMENT BARRIERS SHALL BE UTILIZED TO INTERCEPT RUNOFF AND ALLOW SUSPENDED SEDIMENT TO SETTLE OUT. THEY SHALL BE INSTALLED PRIOR TO ANY UP SLOPE WORK.

FILTER FABRIC DROP INLET PROTECTION SHALL BE INSTALLED AS PROPOSED ON THE EPSC PLANS.

SILT FENCE WILL BE INSTALLED AS PROPOSED ON THE EPSC PLAN.

### 1.4.5 DIVERT UPLAND RUNOFF

DIVERSIONARY MEASURES SHALL BE USED TO INTERCEPT RUNOFF FROM ABOVE THE CONSTRUCTION AND DIRECT IT AROUND THE DISTURBED AREA SO THAT CLEAN WATER DOES NOT BECOME MUDDIED WHILE TRAVELING OVER EXPOSED SOILS ON THE CONSTRUCTION SITE.

THE PROJECT AREA IS RELATIVELY FLAT. THEREFORE IT IS NOT ANTICIPATED THAT DIVERSION MEASURES WILL BE NECESSARY.

### 1.4.6 SLOW DOWN CHANNELIZED RUNOFF

CHECK STRUCTURES SHALL BE UTILIZED TO REDUCE THE VELOCITY, AND THUS THE EROSIVE POTENTIAL, OF CONCENTRATED FLOW IN CHANNELS.

STONE CHECK DAMS WILL BE INSTALLED AS PROPOSED ON THE EPSC PLAN, AT A MINIMUM.

### 1.4.7 CONSTRUCT PERMANENT CONTROLS

PERMANENT STORMWATER TREATMENT DEVICES SHALL BE INSTALLED AS SHOWN ON THE PLANS AND IN ACCORDANCE WITH PERMIT CONDITIONS. CULVERTS, DROP INLETS, STONE LINED DITCHES AND GRASS SWALES SHALL BE INSTALLED AS SHOWN ON THE DRAINAGE LAYOUT SHEET.

### 1.4.8 STABILIZE EXPOSED SOILS DURING CONSTRUCTION

ALL AREAS OF DISTURBANCE MUST HAVE TEMPORARY STABILIZATION IN PLACE WITHIN 48 HOURS OF DISTURBANCE OR IN ACCORDANCE WITH THE CONSTRUCTION GENERAL PERMIT 3-9020 AUTHORIZATION.

SURFACE ROUGHENING OF ALL EXPOSED SLOPES, COMBINED WITH TEMPORARY MULCHING, SHALL BE UTILIZED ON A REGULAR BASIS. BIODEGRADABLE EROSION CONTROL MATTING OR AN EQUIVALENT SHALL BE USED TO STABILIZE ALL SLOPES STEEPER THAN 1:3.

THE FORECAST OF RAINFALL EVENTS SHALL TRIGGER IMMEDIATE PROTECTION OF EXPOSED SOILS.

### 1.4.9 WINTER STABILIZATION

VARIOUS MEASURES SPECIFIC TO WINTER MAY BE NECESSARY SHOULD THE PROJECT EXTEND INTO WINTER (OCTOBER 15 THROUGH APRIL 15). REFER TO THE LOW RISK SITE HANDBOOK FOR GUIDANCE.

### 1.4.10 STABILIZE SOIL AT FINAL GRADE

EXPOSED SOIL MUST BE STABILIZED WITHIN 48 HOURS OF REACHING FINAL GRADE.

SEED, MULCH, FERTILIZER AND LIME SHALL BE USED TO ESTABLISH PERMANENT VEGETATION. FOR SLOPES STEEPER THAN 1:3, BIODEGRADABLE EROSION CONTROL MATTING OR AN EQUIVALENT SHALL BE USED INSTEAD OF MULCH.

### 1.4.11 DE-WATERING ACTIVITIES

DISCHARGE FROM DEWATERING ACTIVITIES THAT FLOWS OFF OF THE CONSTRUCTION SITE MUST NOT CAUSE OR CONTRIBUTE TO A VIOLATION OF THE VERMONT WATER QUALITY STANDARDS.

DEWATERING IS NOT ANTICIPATED ON THIS PROJECT SITE.

### 1.4.12 INSPECT YOUR SITE

INSPECT THE PROJECT SITE BASED ON SPECIAL PROVISION REQUIREMENTS OR CONSTRUCTION GENERAL PERMIT AUTHORIZATION STIPULATIONS.

## 1.5 SEQUENCE AND STAGING

THIS SECTION WILL BE DEVELOPED BY THE CONTRACTOR USING THE GUIDANCE OUTLINED IN THE VTRANS EPSC PLAN CONTRACTOR CHECKLIST.

### 1.5.1 CONSTRUCTION SEQUENCE

### 1.5.2 OFF-SITE ACTIVITIES

IN ADDITION TO THE CONTRACTOR CHECKLIST ANY ACTIVITIES OUTSIDE THE CONSTRUCTION LIMITS SHALL FOLLOW SPECIFICATION 105.25- 105.29 OF THE STANDARD SPECIFICATIONS FOR CONSTRUCTION.

| | |
|---|---|
| PROJECT NAME: | HARTFORD |
| PROJECT NUMBER: | IM 091-2(79) |

| | |
|---|---|
| FILE NAME: sl2al32ero_narrative.dgn | PLOT DATE: 15-DEC-2014 |
| PROJECT LEADER: K. HIGGINS | DRAWN BY: K. FRIEDLAND |
| DESIGNED BY: W. LAMMER | CHECKED BY: J. SALVATORI |
| EPSC NARRATIVE | SHEET 132 OF 166 |

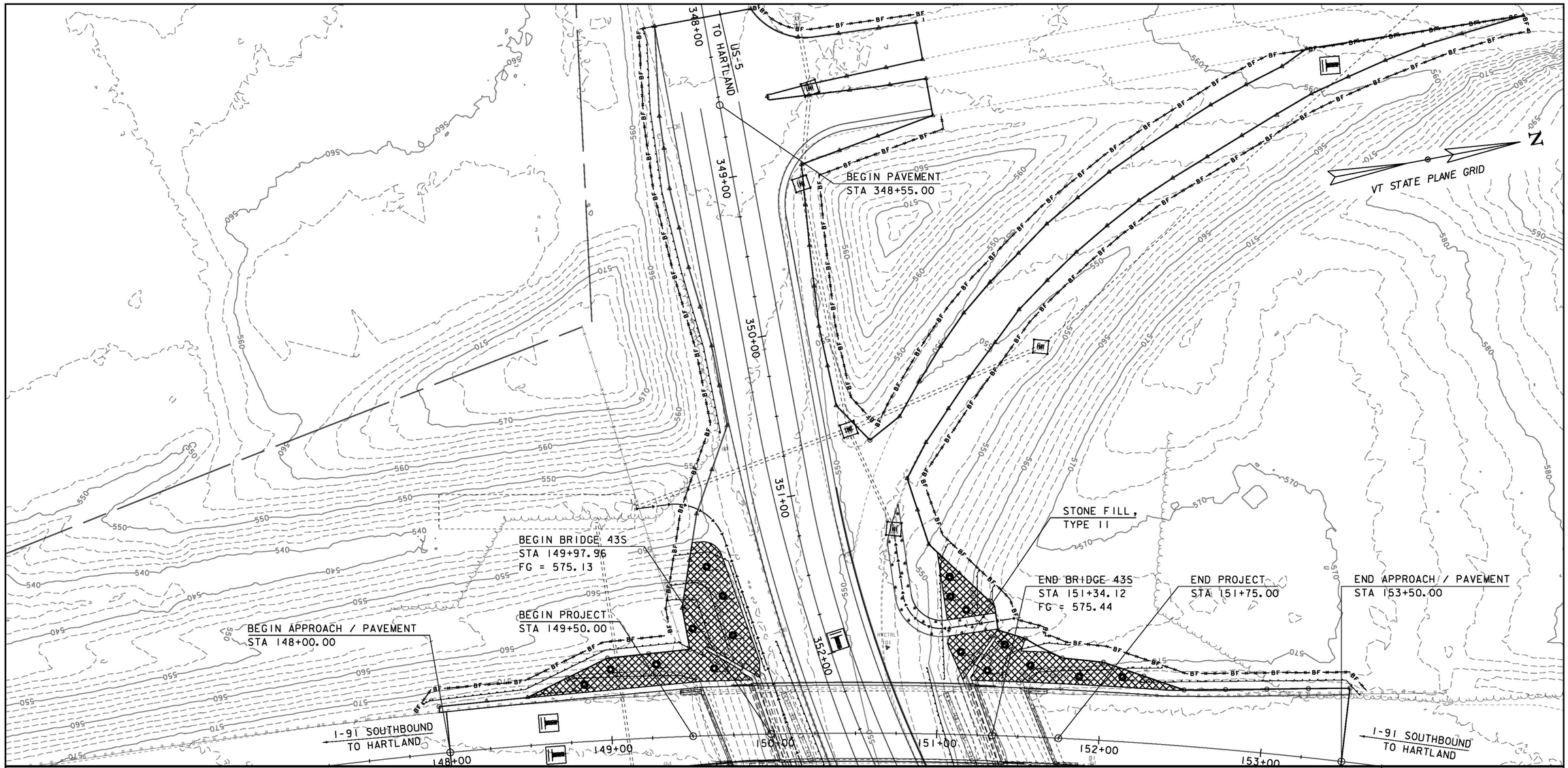


MATCHLINE STA 352+75.00

## EPSC DURING CONSTRUCTION SHEET 1

SCALE 1" = 30'-0"
30 0 30

| | |
|---|---|
| PROJECT NAME: | HARTFORD |
| PROJECT NUMBER: | IM 091-2(79) |
| FILE NAME: sl2al32bdr_ero_dur.dgn | PLOT DATE: 15-DEC-2014 |
| PROJECT LEADER: K. HIGGINS | DRAWN BY: K. FRIEDLAND |
| DESIGNED BY: W. LAMMER | CHECKED BY: J. SALVATORI |
| EPSC DURING CONSTRUCTION SHEET 1 | SHEET 133 OF 166 |

VT STATE PLANE GRID

N

MATCHLINE STA 352+75.00

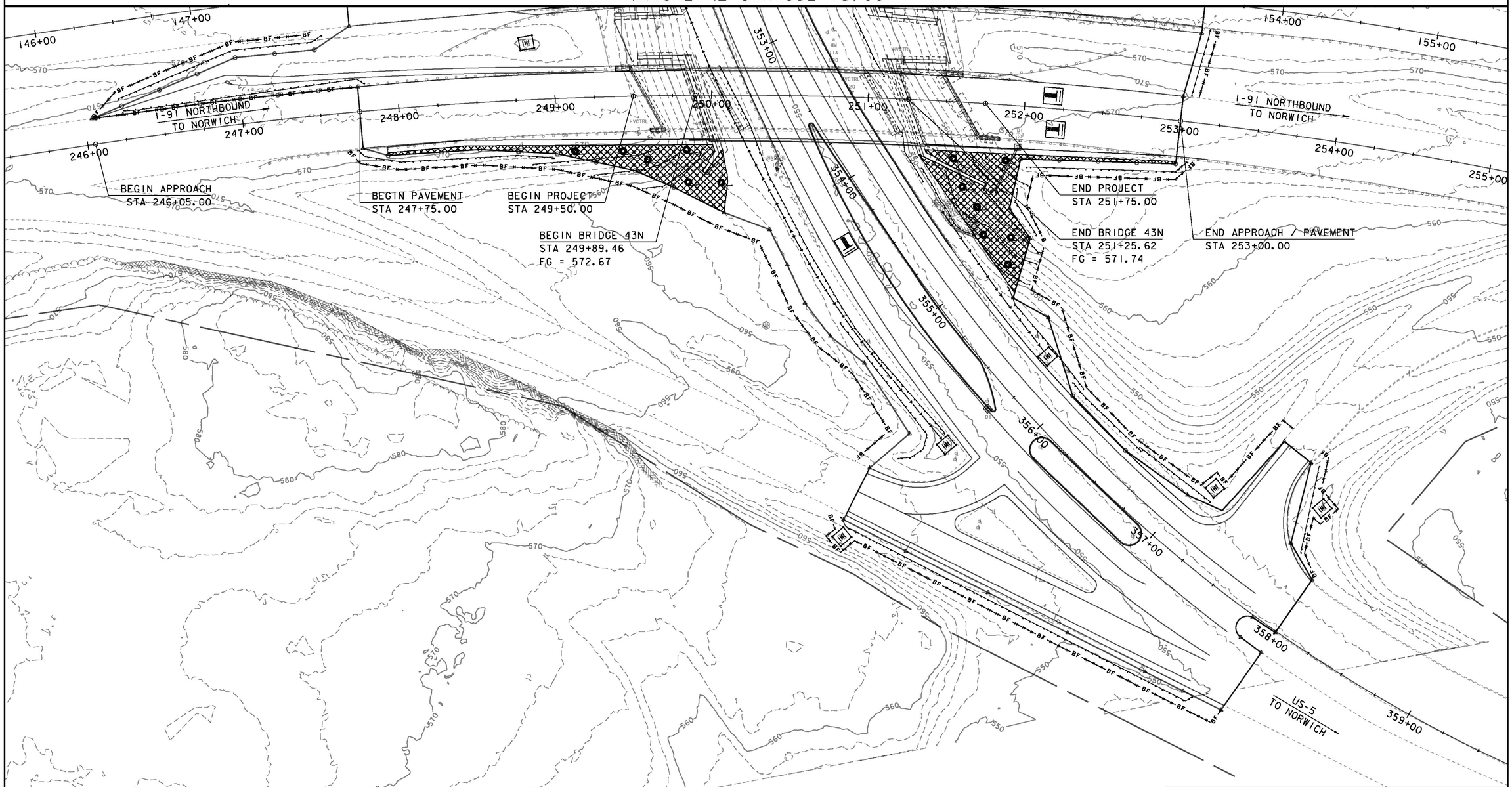


NOTES:

1. TEMPORARY CRANE PAD TO BE DESIGNED BY CONTRACTOR.

## EPSC DURING CONSTRUCTION SHEET 2

SCALE 1" = 30'-0"
30 0 30

| | |
|---|---|
| PROJECT NAME: | HARTFORD |
| PROJECT NUMBER: | IM 091-2(79) |

| | |
|---|---|
| FILE NAME: sl2al32bdr_ero_dur.dgn | PLOT DATE: 15-DEC-2014 |
| PROJECT LEADER: K. HIGGINS | DRAWN BY: K. FRIEDLAND |
| DESIGNED BY: W. LAMMER | CHECKED BY: J. SALVATORI |
| EPSC DURING CONSTRUCTION SHEET 2 | SHEET 134 OF 166 |

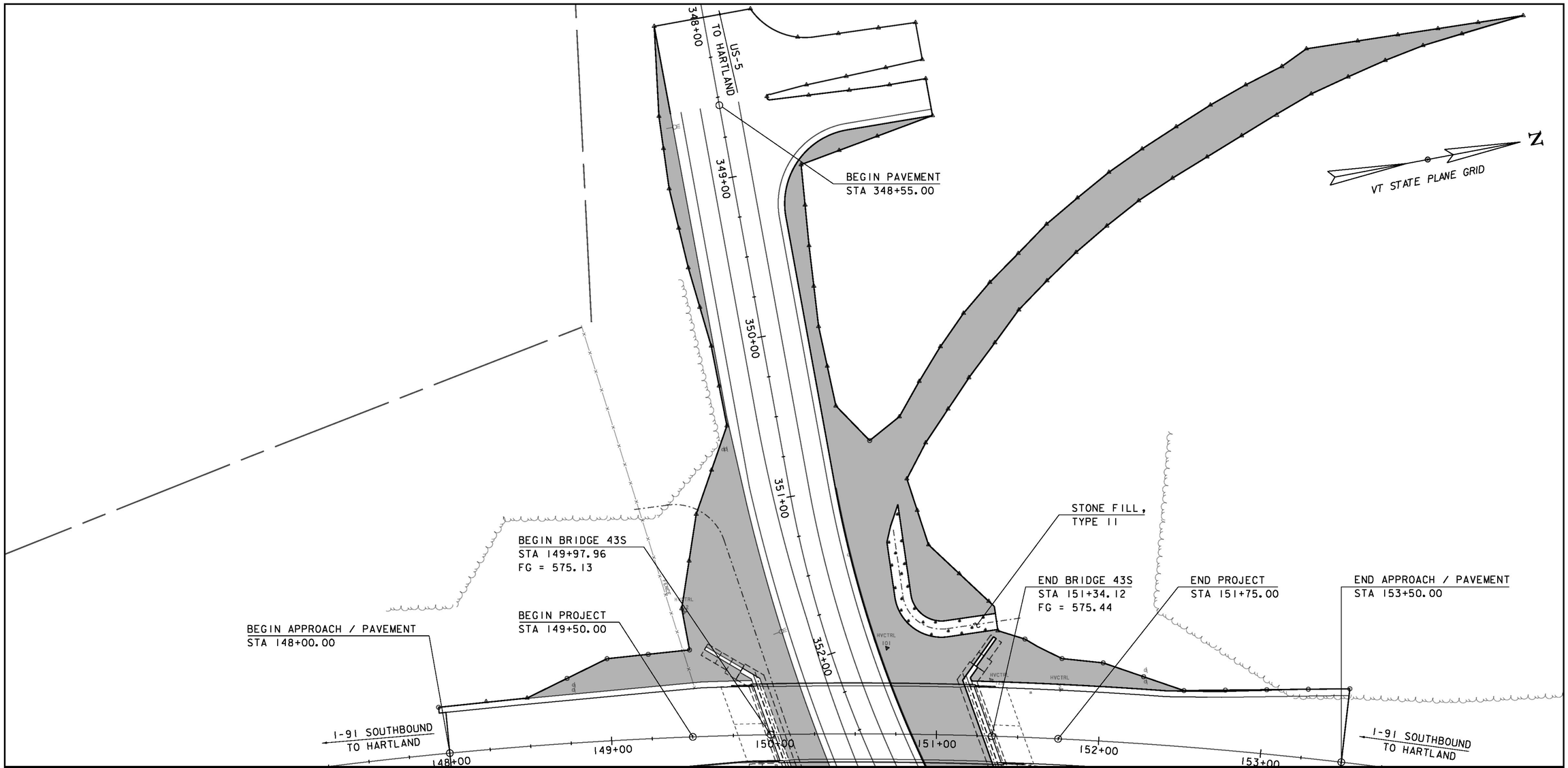


MATCHLINE STA 352+75.00

AREAS OF EARTH DISTURBANCE
THAT WILL REQUIRE REVEGETATION.

## EPSC FINAL CONDITIONS SHEET 1

SCALE 1" = 30'-0"
30 0 30

| | |
|---|---|
| PROJECT NAME: | HARTFORD |
| PROJECT NUMBER: | IM 091-2(79) |
| FILE NAME: sl2al32bdr_ero_final.dgn | PLOT DATE: 15-DEC-2014 |
| PROJECT LEADER: K. HIGGINS | DRAWN BY: K. FRIEDLAND |
| DESIGNED BY: W. LAMMER | CHECKED BY: J. SALVATORI |
| EPSC FINAL CONDITIONS SHEET 1 | SHEET 135 OF 166 |

MATCHLINE STA 352+75.00

VT STATE PLANE GRID

N

I-91 NORTHBOUND
TO NORWICH

US-5
TO NORWICH

146+00
147+00
246+00
247+00
248+00
249+00
250+00
251+00
252+00
253+00
254+00
255+00
353+00
354+00
355+00
356+00
357+00
358+00
359+00
154+00
155+00

BEGIN APPROACH
STA 246+05.00

BEGIN PAVEMENT
STA 247+75.00

BEGIN PROJECT
STA 249+50.00

BEGIN BRIDGE 43N
STA 249+89.46
FG = 572.67

END PROJECT
STA 251+75.00

END BRIDGE 43N
STA 251+25.62
FG = 571.74

END APPROACH / PAVEMENT
STA 253+00.00

AREAS OF EARTH DISTURBANCE
THAT WILL REQUIRE REVEGETATION.

# EPSC FINAL CONDITIONS SHEET 2

SCALE 1" = 30'-0"
30 0 30

| | |
|---|---|
| PROJECT NAME: | HARTFORD |
| PROJECT NUMBER: | IM 091-2(79) |
| FILE NAME: sl2al32bdr_ero_final.dgn | PLOT DATE: 15-DEC-2014 |
| PROJECT LEADER: K. HIGGINS | DRAWN BY: K. FRIEDLAND |
| DESIGNED BY: W. LAMMER | CHECKED BY: J. SALVATORI |
| EPSC FINAL CONDITIONS SHEET 2 | SHEET 136 OF 166 |

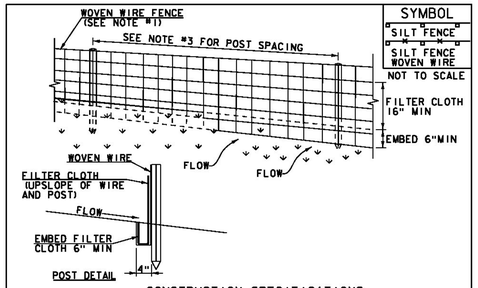


SYMBOL
SILT FENCE
SILT FENCE WOVEN WIRE
NOT TO SCALE

## CONSTRUCTION SPECIFICATIONS

1. WOVEN WIRE REINFORCED FENCE IS REQUIRED WITHIN 100' UPSLOPE OF RECEIVING WATERS WHEN THE PROJECT FALLS UNDER A CONSTRUCTION STORMWATER PERMIT. WOVEN WIRE SHALL BE A MIN. 14 GAUGE WITH A 6" MAX. MESH OPENING.
2. FILTER CLOTH SHALL BE EITHER FILTER X, MIRAFI100X, STABILINKA T140N OR APPROVED EQUIVALENT.
3. POST SPACING FOR WIRE-BACKED FENCE SHALL BE 10' MAXIMUM. FOR FILTER-CLOTH FENCE, WHEN ELONGATION IS >50%, POST SPACING SHALL NOT EXCEED 4' AND WHEN ELONGATION IS <50%, POST SPACING SHALL NOT EXCEED 6'.
4. WOVEN WIRE FENCE IS TO BE FASTENED SECURELY TO FENCE POSTS WITH WIRE TIES. FILTER CLOTH IS TO BE FASTENED SECURELY TO WOVEN WIRE FENCE WITH TIES SPACED EVERY 24" AT TOP AND MID SECTION.
5. WHEN TWO SECTIONS OF FILTER CLOTH ADJOIN EACH OTHER THEY SHALL BE OVER-LAPPED BY 6" AND FOLDED.
6. MAINTENANCE SHALL BE PERFORMED AS NEEDED AND MATERIAL REMOVED WHEN SEDIMENT REACHES HALF OF FABRIC HEIGHT.

ADAPTED FROM DETAILS PROVIDED BY: NEW YORK STATE DEC ORIGINALLY DEVELOPED BY USDA-NRCS VERMONT DEPARTMENT OF ENVIRONMENTAL CONSERVATION

SILT FENCE

NOTES:
REFER TO "THE VERMONT STANDARDS & SPECIFICATIONS FOR EROSION PREVENTION & SEDIMENT CONTROL -2006- " FROM THE VT AGENCY OF NATURAL RESOURCES FOR ADDITIONAL GUIDANCE.

THIS WORK SHALL BE PERFORMED IN ACCORDANCE WITH SECTION 649 AND AS SHOWN IN THE PLANS FOR GEOTEXTILE FOR SILT FENCE (PAY ITEM 649.51) OR GEOTEXTILE FOR SILT FENCE, WOVEN WIRE REINFORCED (PAY ITEM 649.515).

| REVISIONS | |
|---|---|
| MARCH 21, 2008 | WHF |
| DECEMBER 11, 2008 | WHF |
| JANUARY 13, 2009 | WHF |

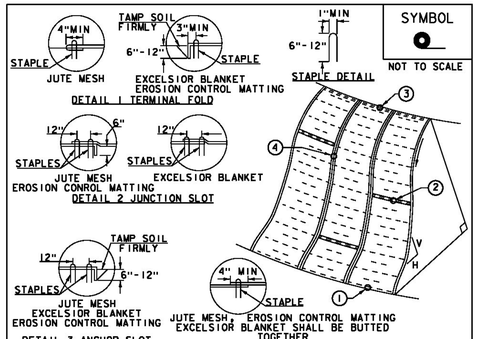


SYMBOL
NOT TO SCALE

## CONSTRUCTION SPECIFICATIONS

1. APPLY TO SLOPES GREATER THAN 3H: 1V OR WHERE NECESSARY TO AID IN ESTABLISHING VEGETATION.
2. APPLY FERTILIZER, LIME SEED PRIOR TO PLACING MATTING.
3. STAPLES ARE TO BE PLACED ALTERNATELY, IN COLUMNS APPROXIMATELY 2' APART AND IN ROWS APPROXIMATELY 3' APART. APPROXIMATELY 175 STAPLES ARE REQUIRED PER 4'X225' ROLL OF MATERIAL AND 125 STAPLES ARE REQUIRED PER 4'X150' ROLL OF MATERIAL.
4. DISTURBED AREAS SHALL BE SMOOTHLY GRADED. EROSION CONTROL MATERIAL SHALL BE PLACED LOOSELY OVER GROUND SURFACE. DO NOT STRETCH.
5. ALL TERMINAL ENDS AND TRANSVERSE LAPS SHALL BE STAPLED AT APPROXIMATELY 12" INTERVALS.

ADAPTED FROM DETAILS PROVIDED BY: NEW YORK STATE DEC ORIGINALLY DEVELOPED BY USDA-NRCS VERMONT DEPARTMENT OF ENVIRONMENTAL CONSERVATION

ROLLED EROSION CONTROL PRODUCT (RECP) SIDE SLOPE

NOTES:
REFER TO "THE VERMONT STANDARDS & SPECIFICATIONS FOR EROSION PREVENTION & SEDIMENT CONTROL -2006- " FROM THE VT AGENCY OF NATURAL RESOURCES FOR ADDITIONAL GUIDANCE.
THIS WORK SHALL BE PERFORMED IN ACCORDANCE WITH SECTION 653 AND AS SHOWN IN THE PLANS FOR TEMPORARY EROSION MATTING (PAY ITEM 653.20) ~~OR PERMANENT EROSION MATTING (PAY ITEM 653.21).~~

| REVISIONS | |
|---|---|
| APRIL 16, 2007 | JMF |
| JANUARY 13, 2009 | WHF |

### VAOT RURAL AREA MIX

| LBS/AC | | | | | |
|---|---|---|---|---|---|
| % WEIGHT | BROADCAST | HYDROSEED | NAME | GERM % | PURITY % |
| 37.5% | 22.5 | 45 | CREEPING RED FESCUE | 85% | 98% |
| 37.5% | 22.5 | 45 | TALL FESCUE | 90% | 95% |
| 5.0% | 3 | 6 | RED TOP | 90% | 95% |
| 15.0% | 9 | 18 | BIRDSFOOT TREFOIL | 85% | 98% |
| 5.0% | 3 | 6 | ANNUAL RYE GRASS | 85% | 95% |
| 100% | 60 | 120 | | | |

### VAOT URBAN AREA MIX

| LBS/AC | | | | | |
|---|---|---|---|---|---|
| % WEIGHT | BROADCAST | HYDROSEED | NAME | GERM % | PURITY % |
| 42.5% | 34 | 68 | CREEPING RED FESCUE | 85% | 98% |
| 10.0% | 8 | 16 | PERENNIAL RYE GRASS | 90% | 95% |
| 42.5% | 34 | 68 | KENTUCKY BLUE GRASS | 85% | 85% |
| 5.0% | 4 | 8 | ANNUAL RYE GRASS | 85% | 95% |
| 100% | 80 | 160 | | | |

### SOIL AMENDMENT GUIDANCE

| FERTILIZER | | LIME | |
|---|---|---|---|
| BROADCAST | HYDROSEED | BROADCAST | HYDROSEED |
| 10-20-10 | *FOLLOW* | PELLETIZED | *FOLLOW* |
| 500 LBS/AC | *MANUFACTURER* | 2 TONS/AC | *MANUFACTURER* |

## CONSTRUCTION GUIDANCE

1. RURAL SEED MIX: USE AS INDICATED IN THE PLANS AND/OR FOR ALL ESTABLISHED UPLAND (NON WETLAND) AREAS DISTURBED BY THE CONTRACTOR.
2. URBAN SEED MIX: USE AS INDICATED IN THE PLANS AND/OR FOR ALL ESTABLISHED LAWN AREAS DISTURBED BY THE CONTRACTOR.
3. ALL SEED MIXTURES: SHALL NOT HAVE A WEED CONTENT EXCEEDING 0.40% BY WEIGHT AND SHALL BE FREE OF ALL NOXIOUS SEED.
4. FERTILIZER AND LIMESTONE: SHALL FOLLOW RATES SHOWN ON PLAN OR AS DIRECTED BY THE ENGINEER
5. HAY MULCH: TO BE PLACED ON EARTH SLOPES AT THE RATE OF 2 TONS/ACRE, ACHIEVE 90% GROUND COVER OR AS DIRECTED BY THE ENGINEER.
6. TOPSOIL: TO BE USED WITH SEED AS INDICATED ON THE PLANS, OR AS DIRECTED BY THE ENGINEER.
7. HYDROSEEDING: ALTHOUGH GUIDANCE IS GIVEN ABOVE THE SITE CONDITIONS AND THE TYPE OF HYDROSEED WILL ULTIMATELY DICTATE THE AMOUNTS AND TYPES OF SOIL AMENDMENTS TO BE APPLIED
8. TURF ESTABLISHMENT: PLACING SEED, FERTILIZER, LIME AND MULCH PRIOR TO SEPTEMBER 15 AND AFTER APRIL 15 CAN BETTER ENSURE A VIGOROUS GROWTH OF GRASS.

ADAPTED FROM VTRANS TECHNICAL LANDSCAPE MANUAL FOR ROADWAYS AND TRANSPORTATION FACILITIES

TURF ESTABLISHMENT

THIS WORK SHALL BE PERFORMED IN ACCORDANCE WITH SECTION 651 FOR SEED (PAY ITEM 651.15)

| REVISIONS | |
|---|---|
| JUNE 23, 2009 | WHF |
| JANUARY 15, 2010 | WHF |
| FEBRUARY 16, 2011 | WHF |

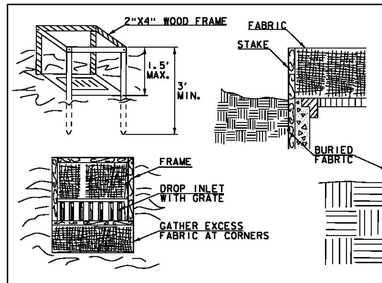


SYMBOL
NOT TO SCALE

## CONSTRUCTION SPECIFICATIONS

1. FILTER FABRIC SHALL HAVE AN APPARENT OPENING SIZE OF 40-85. BURLAP MAY BE USED FOR SHORT TERM APPLICATIONS.
2. CUT FABRIC FROM A CONTINUOUS ROLL TO ELIMINATE JOINTS. IF JOINTS ARE NEEDED THEY WILL BE OVERLAPPED TO THE NEXT STAKE.
3. STAKE MATERIALS WILL BE STANDARD 2"x 4" WOOD OR EQUIVALENT METAL WITH A MINIMUM LENGTH OF 3'.
4. SPACE STAKES EVENLY AROUND INLET 3' APART AND DRIVE A MINIMUM 18" DEEP. SPANS GREATER THAN 3' MAY BE BRIDGED WITH THE USE OF WIRE MESH BEHIND THE FILTER FABRIC FOR SUPPORT.
5. FABRIC SHALL BE EMBEDDED 1' MINIMUM BELOW GROUND AND BACKFILLED. IT SHALL BE SECURELY FASTENED TO THE STAKES AND FRAME.
6. A 2" x 4" WOOD FRAME SHALL BE COMPLETED AROUND THE CREST OF THE FABRIC FOR OVER FLOW STABILITY.
7. MAXIMUM DRAINAGE AREA 1 ACRE

ADAPTED FROM DETAILS PROVIDED BY: NEW YORK STATE DEC ORIGINALLY DEVELOPED BY USDA-NRCS VERMONT DEPARTMENT OF ENVIRONMENTAL CONSERVATION

FILTER FABRIC DROP INLET PROTECTION

NOTES:
REFER TO "THE VERMONT STANDARDS & SPECIFICATIONS FOR EROSION PREVENTION & SEDIMENT CONTROL -2006- " FROM THE VT AGENCY OF NATURAL RESOURCES FOR ADDITIONAL GUIDANCE.

THIS WORK SHALL BE PERFORMED IN ACCORDANCE WITH SECTION 653 FOR INLET PROTECTION DEVICE, TYPE I (PAY ITEM 653.40).

| REVISIONS | |
|---|---|
| MARCH 7, 2008 | WHF |
| JANUARY 13, 2009 | WHF |

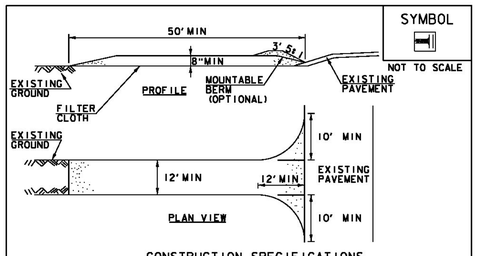


SYMBOL
NOT TO SCALE

## CONSTRUCTION SPECIFICATIONS

1. STONE SIZE- USE 1-4" STONE, RECLAIMED OR RECYCLED CONCRETE EQUIVALENT.
2. LENGTH- NOT LESS THAN 50' (EXCEPT ON A SINGLE RESIDENCE LOT WHERE A 30' MINIMUM LENGTH APPLIES).
3. THICKNESS- NOT LESS THAN 8".
4. WIDTH- 12' MINIMUM, BUT NOT LESS THAN THE FULL WIDTH AT POINTS WHERE INGRESS OR EGRESS OCCURS. 24' IF SINGLE ENTRANCE TO SITE.
5. GEOTEXTILE MUST BE PLACED OVER THE ENTIRE AREA PRIOR TO PLACING STONE.
6. SURFACE WATER- ALL SURFACE WATER FLOWING OR DIVERTED TOWARD CONSTRUCTION ENTRANCES SHALL BE PIPED BENEATH THE ENTRANCE. IF PIPING IS IMPRACTICAL, A MOUNTABLE BERM WITH 5:1 SLOPES WILL BE PERMITTED.
7. MAINTENANCE- THE ENTRANCE SHALL BE MAINTAINED IN A CONDITION WHICH WILL PREVENT TRACKING OR FLOWING OF SEDIMENT ONTO PUBLIC RIGHTS-OF-WAY. ALL SEDIMENT SPILLED, DROPPED, WASHED OR TRACKED ONTO PUBLIC RIGHTS-OF-WAY MUST BE REMOVED IMMEDIATELY.
8. WHEN WASHING IS REQUIRED, IT SHALL BE DONE ON AN AREA STABILIZED WITH STONE AND WHICH DRAINS INTO AN APPROVED SEDIMENT TRAPPING DEVICE.
9. PERIODIC INSPECTION AND NEEDED MAINTENANCE SHALL BE PROVIDED ACCORDING TO PERMIT REQUIREMENTS.

ADAPTED FROM DETAILS PROVIDED BY: NEW YORK STATE DEC ORIGINALLY DEVELOPED BY USDA-NRCS VERMONT DEPARTMENT OF ENVIRONMENTAL CONSERVATION

STABILIZED CONSTRUCTION ENTRANCE

NOTES:
REFER TO "THE VERMONT STANDARDS & SPECIFICATIONS FOR EROSION PREVENTION & SEDIMENT CONTROL -2006- " FROM THE VT AGENCY OF NATURAL RESOURCES FOR ADDITIONAL GUIDANCE.

THIS WORK SHALL BE PERFORMED IN ACCORDANCE WITH SECTION 653 FOR VEHICLE TRACKING PAD (PAY ITEM 653.35) OR AS SPECIFIED IN THE CONTRACT.

| REVISIONS | |
|---|---|
| MARCH 24, 2008 | WHF |
| JANUARY 13, 2009 | WHF |

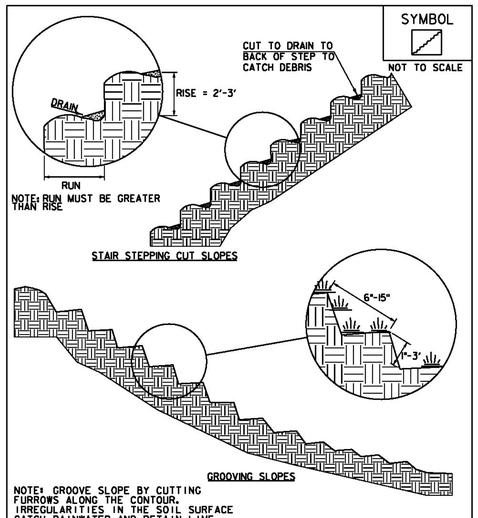


SYMBOL
NOT TO SCALE

NOTE: GROOVE SLOPE BY CUTTING FURROWS ALONG THE CONTOUR. IRREGULARITIES IN THE SOIL SURFACE CATCH RAINWATER AND RETAIN LIME, FERTILIZER AND SEED.

ADAPTED FROM DETAILS PROVIDED BY: NEW YORK STATE DEC ORIGINALLY DEVELOPED BY USDA-NRCS VERMONT DEPARTMENT OF ENVIRONMENTAL CONSERVATION

SURFACE ROUGHENING

NOTES:
REFER TO "THE VERMONT STANDARDS & SPECIFICATIONS FOR EROSION PREVENTION & SEDIMENT CONTROL -2006- " FROM THE VT AGENCY OF NATURAL RESOURCES FOR ADDITIONAL GUIDANCE.

THIS WORK SHALL BE CONSIDERED INCIDENTAL TO THE CONTRACT

| REVISIONS | |
|---|---|
| APRIL 1, 2008 | WHF |
| JANUARY 13, 2009 | WHF |

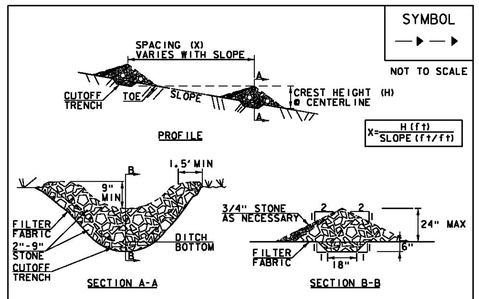


SYMBOL
NOT TO SCALE

## CONSTRUCTION SPECIFICATIONS

1. STONE WILL BE PLACED ON A FILTER FABRIC FOUNDATION.
2. CHECK DAMS SHALL BE SPACED SO THAT THE ELEVATION OF THE CREST OF THE DOWNSTREAM DAM IS AT THE SAME ELEVATION AS THE TOE OF THE UPSTREAM DAM.
3. 3/4" FILTERING STONE MAY BE ADDED TO THE FACE OF THE CHECK DAM AS NECESSARY.
4. EXTEND THE STONE A MINIMUM OF 1.5' BEYOND THE DITCH BANKS TO PREVENT CUTTING AROUND THE DAM.
5. PROTECT CHANNEL DOWNSTREAM OF THE LOWEST CHECK DAM FROM SCOUR AND EROSION WITH STONE OR LINER AS APPROPRIATE.
6. ENSURE THAT CHANNEL APPURTENANCES SUCH AS CULVERT ENTRANCES BELOW CHECK DAMS ARE NOT SUBJECT TO DAMAGE OR BLOCKAGE FROM DISPLACED STONE.
7. MAXIMUM DRAINAGE AREA 2 ACRES.

ADAPTED FROM DETAILS PROVIDED BY: NEW YORK STATE DEC ORIGINALLY DEVELOPED BY USDA-NRCS VERMONT DEPARTMENT OF ENVIRONMENTAL CONSERVATION

CHECK DAM

NOTES:
REFER TO "THE VERMONT STANDARDS & SPECIFICATIONS FOR EROSION PREVENTION & SEDIMENT CONTROL -2006- " FROM THE VT AGENCY OF NATURAL RESOURCES FOR ADDITIONAL GUIDANCE.

THIS WORK SHALL BE PERFORMED IN ACCORDANCE WITH SECTION 653 FOR TEMPORARY STONE CHECK DAM, TYPE I (PAY ITEM 653.25)

| REVISIONS | |
|---|---|
| MARCH 21, 2008 | WHF |
| JANUARY 8, 2009 | WHF |

PROJECT NAME: HARTFORD
PROJECT NUMBER: IM 091-2(79)

FILE NAME: sl2al32ero_details.dgn
PROJECT LEADER: K. HIGGINS
DESIGNED BY: W. LAMMER
EPSC DETAILS

PLOT DATE: 15-DEC-2014
DRAWN BY: K. FRIEDLAND
CHECKED BY: J. SALVATORI

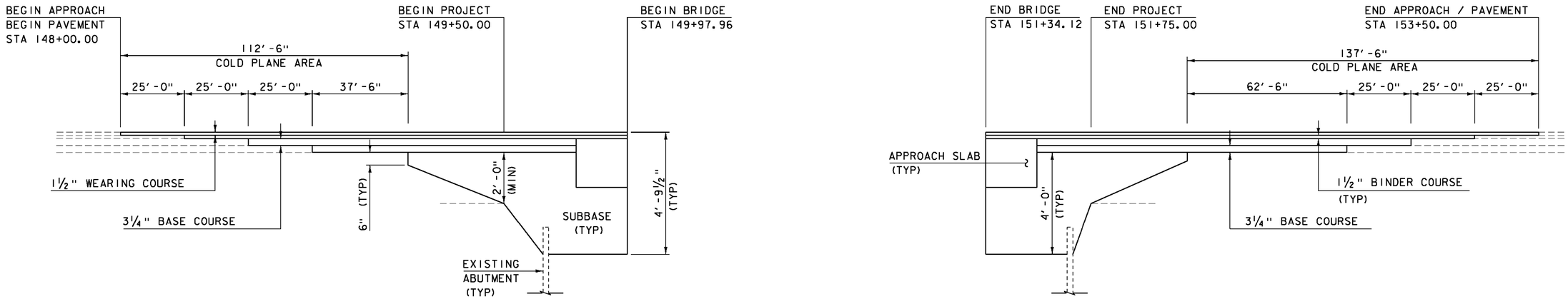


## I-91 SB MATERIAL TRANSITION

HOR. SCALE 1" = 20'-0"
NO VERT. SCALE

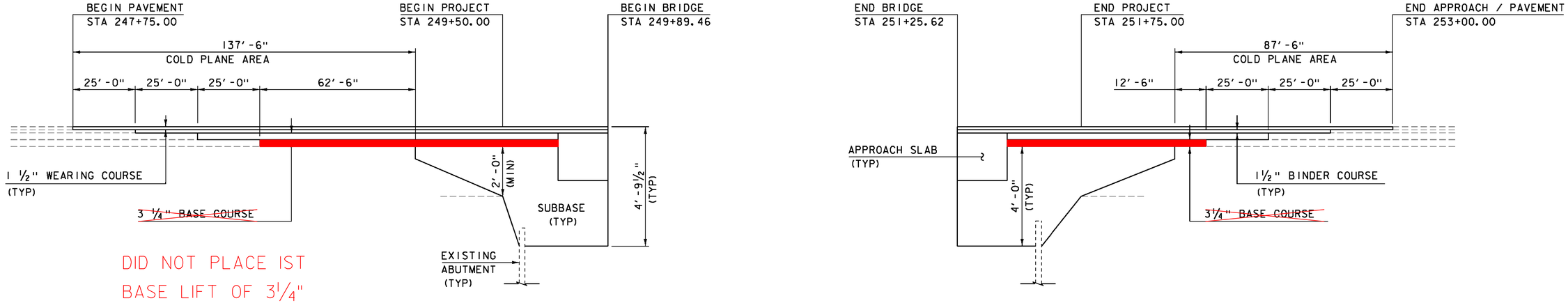


DID NOT PLACE IST BASE LIFT OF 3¼" ON NB ONLY

## I-91 NB MATERIAL TRANSITION

HOR. SCALE 1" = 20'-0"
NO VERT. SCALE

| | |
|---|---|
| PROJECT NAME: | HARTFORD |
| PROJECT NUMBER: | IM 091-2(79) |

| | |
|---|---|
| FILE NAME: sl2al32profile.dgn | PLOT DATE: 15-DEC-2014 |
| PROJECT LEADER: K. HIGGINS | DRAWN BY: J. SALVATORI |
| DESIGNED BY: J. SALVATORI | CHECKED BY: G. LAROCHE |
| MATERIAL TRANSITION | SHEET 138 OF 166 |

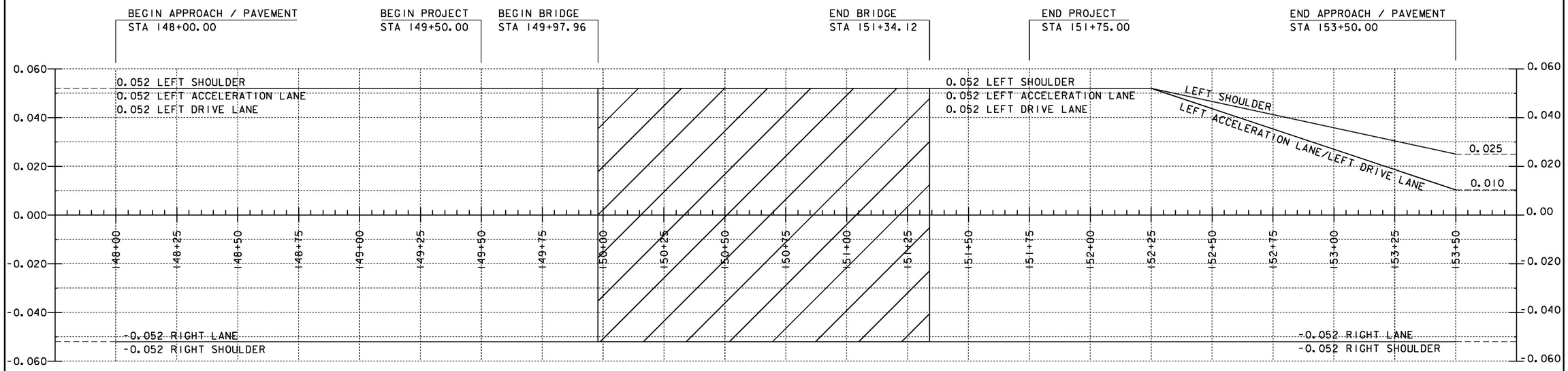


## I-91 SB BANKING DIAGRAM

HOR. SCALE 1" = 20'-0"
NO VER. SCALE

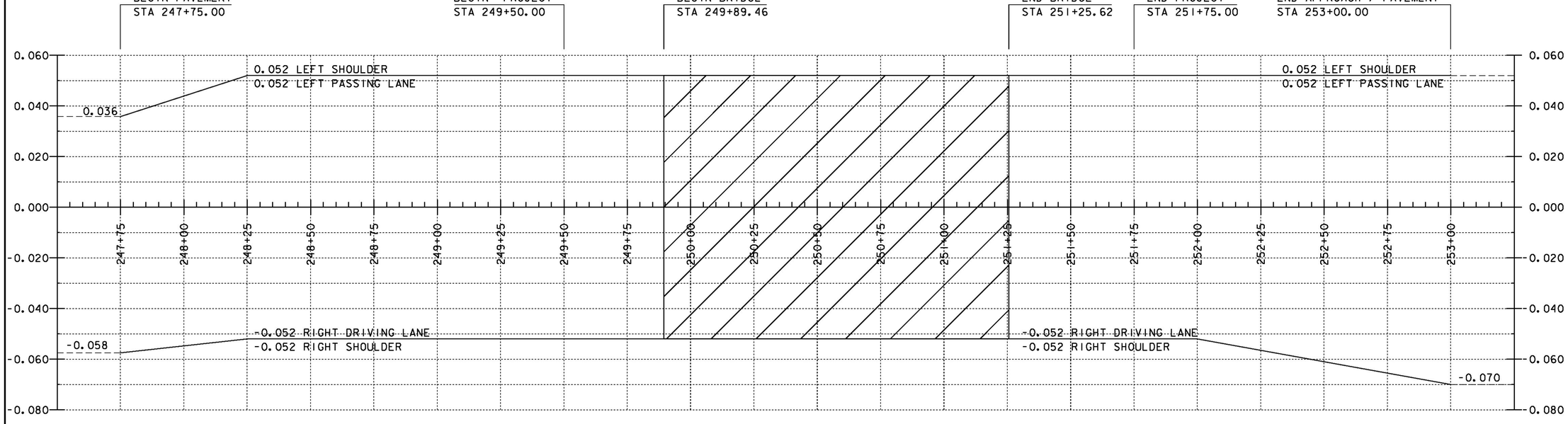


## I-91 NB BANKING DIAGRAM

HOR. SCALE 1" = 20'-0"
NO VER. SCALE

| | |
|---|---|
| PROJECT NAME: | HARTFORD |
| PROJECT NUMBER: | IM 091-2(79) |
| FILE NAME: sl2al32profile.dgn | PLOT DATE: 15-DEC-2014 |
| PROJECT LEADER: K. HIGGINS | DRAWN BY: J. SALVATORI |
| DESIGNED BY: G. LAROCHE | CHECKED BY: W. LAMMER |
| BANKING DIAGRAM | SHEET 139 OF 166 |

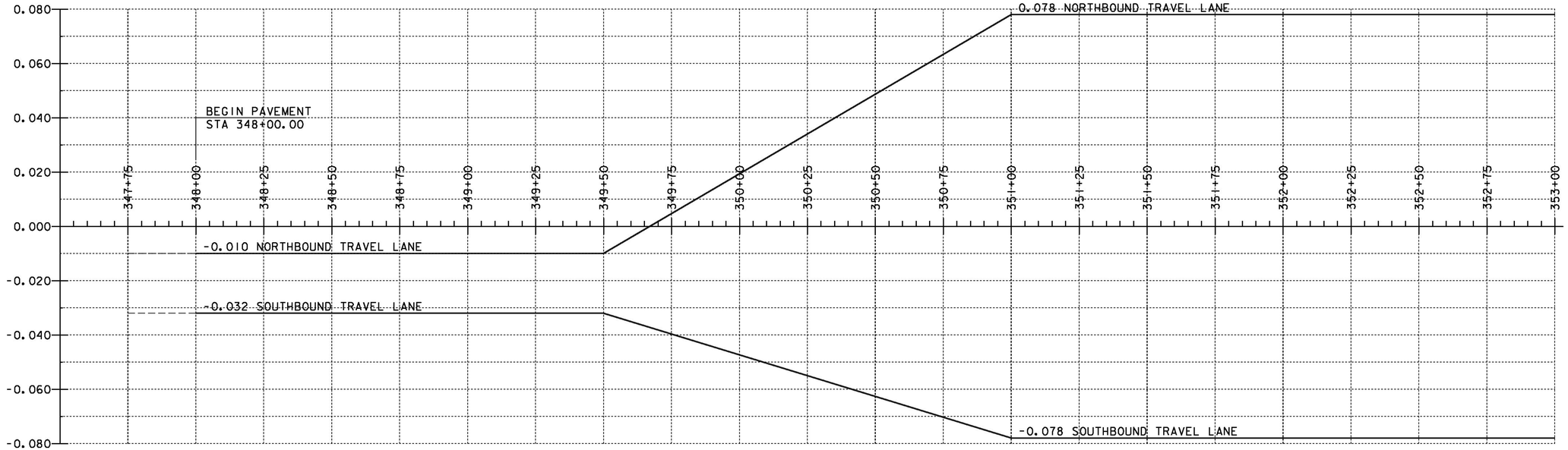


## US 5 BANKING DIAGRAM
## (STA 347+50 - 353+00)

HOR. SCALE 1" = 20'-0"
NO VER. SCALE

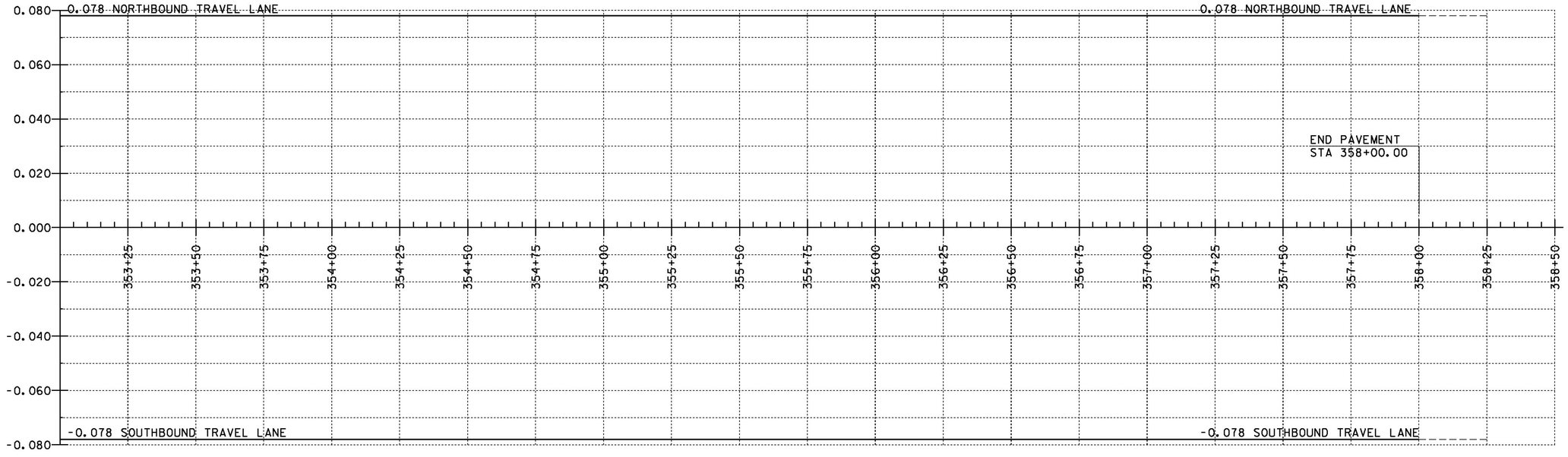


## US 5 BANKING DIAGRAM
## (STA 353+00 - 358+50)

HOR. SCALE 1" = 20'-0"
NO VER. SCALE

| | |
|---|---|
| PROJECT NAME: | HARTFORD |
| PROJECT NUMBER: | IM 091-2(79) |

| | |
|---|---|
| FILE NAME: s12a132profile.dgn | PLOT DATE: 15-DEC-2014 |
| PROJECT LEADER: K. HIGGINS | DRAWN BY: J. SALVATORI |
| DESIGNED BY: G. LAROCHE | CHECKED BY: W. LAMMER |
| US 5 BANKING DIAGRAM | SHEET 140 OF 166 |

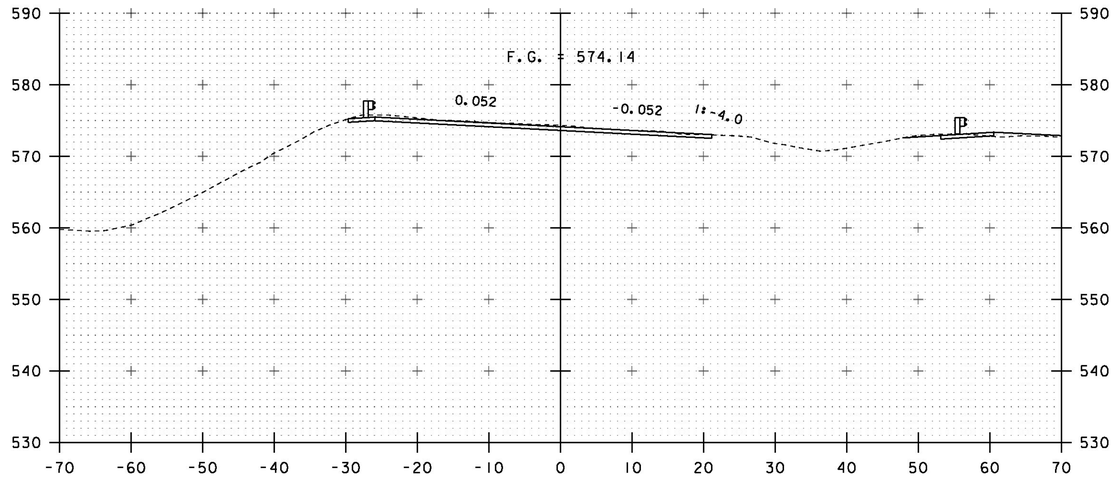


148+50

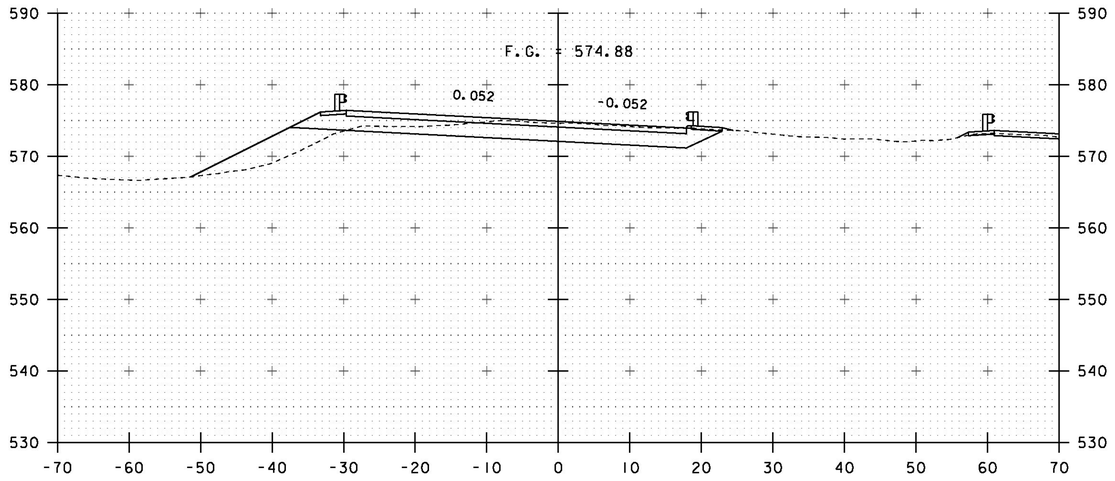


149+50
BEGIN PROJECT

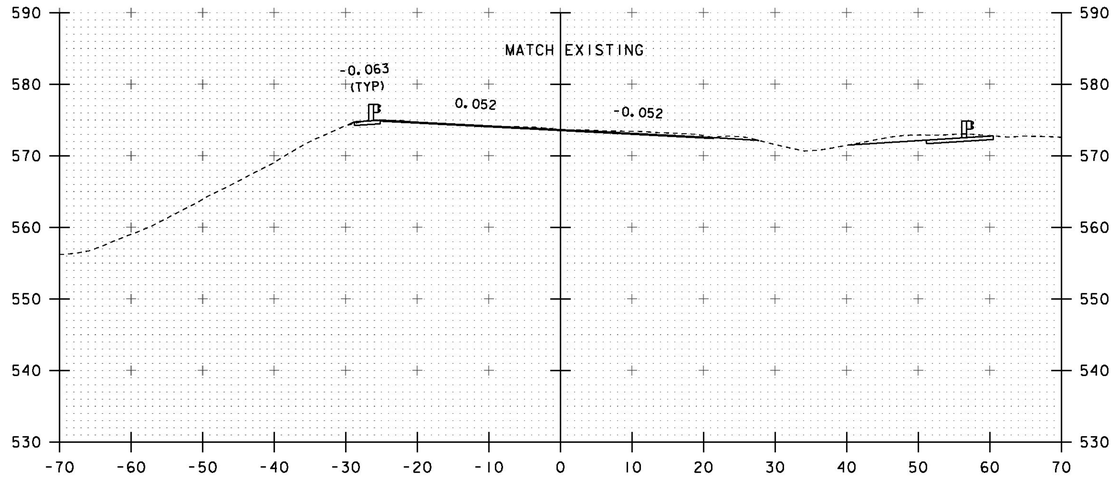


148+00
BEGIN APPROACH / PAVEMENT

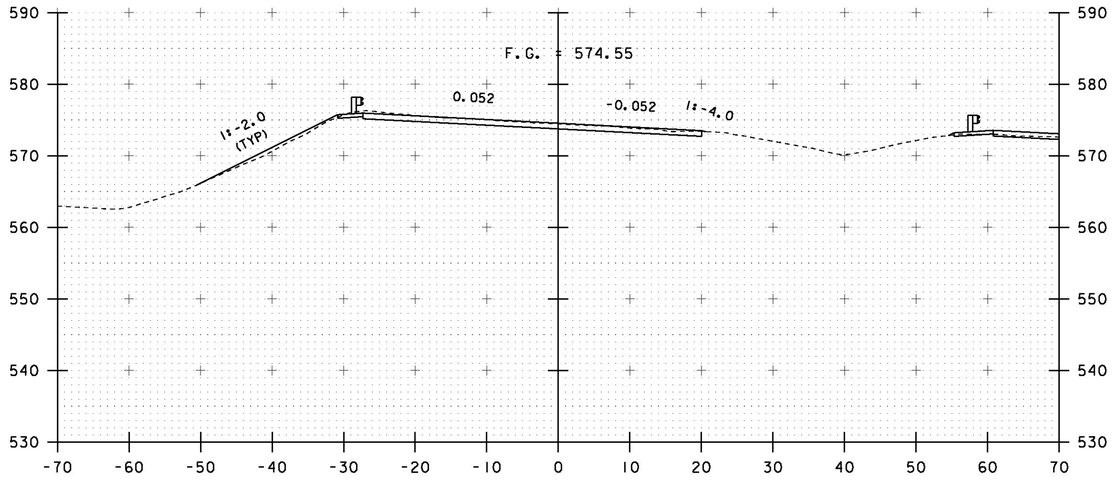


149+00

STA. 148+00 TO STA. 149+50

| | |
|---|---|
| PROJECT NAME: | HARTFORD |
| PROJECT NUMBER: | IM 091-2(79) |
| FILE NAME: sl2al32xsec.dgn | PLOT DATE: 15-DEC-2014 |
| PROJECT LEADER: K. HIGGINS | DRAWN BY: K. FRIEDLAND |
| DESIGNED BY: G. LAROCHE | CHECKED BY: W. LAMMER |
| I-91 SOUTHBOUND CROSS SECTIONS | SHEET 141 OF 166 |

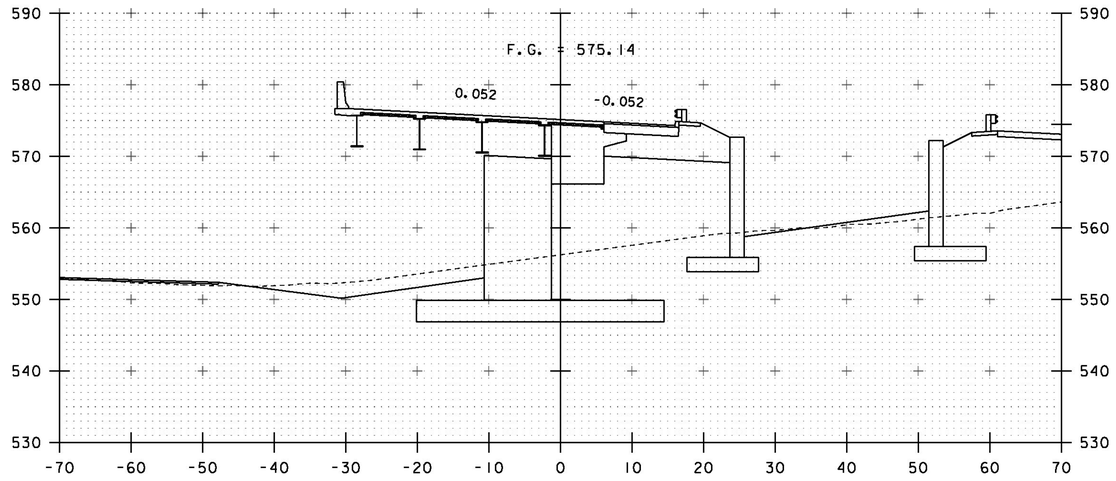


150+00
BEGIN BRIDGE 149+97.96

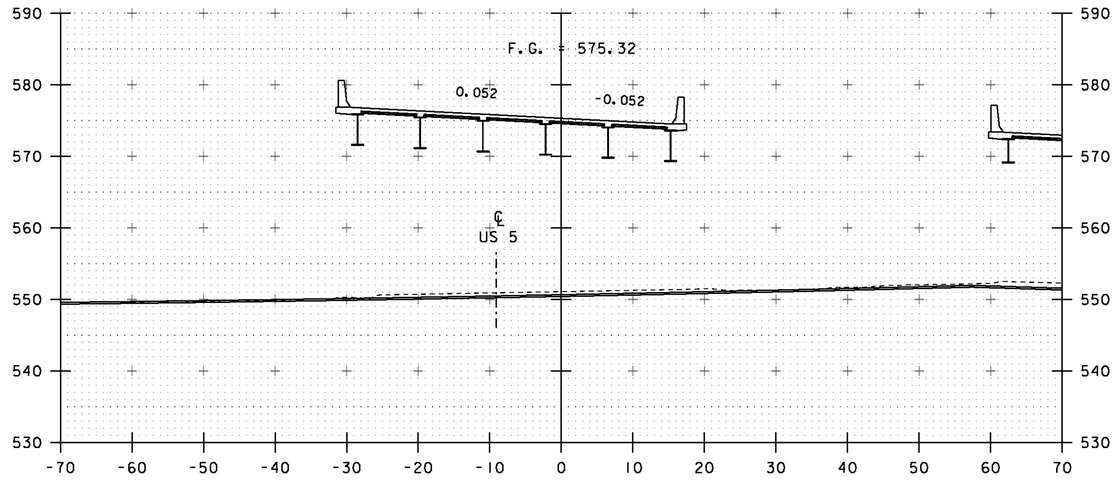


150+50

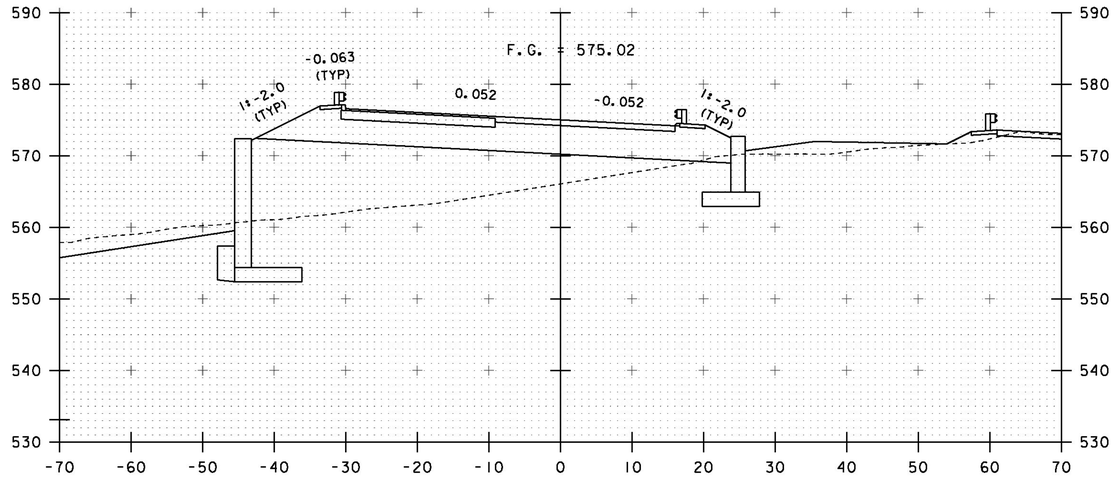


149+75

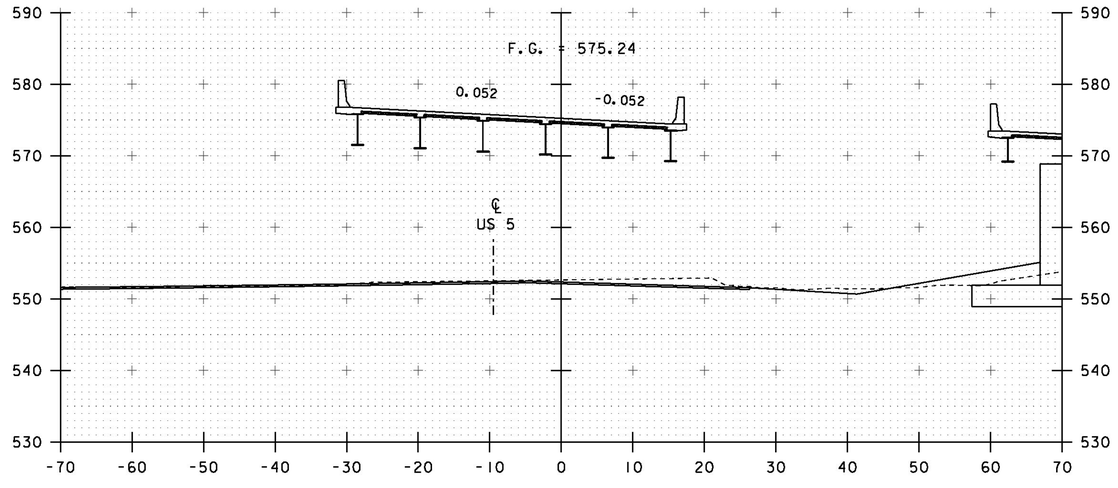


150+25

STA. 149+75 TO STA. 150+50

| | |
|---|---|
| PROJECT NAME: | HARTFORD |
| PROJECT NUMBER: | IM 091-2(79) |
| FILE NAME: sl2al32xsec.dgn | PLOT DATE: 15-DEC-2014 |
| PROJECT LEADER: K. HIGGINS | DRAWN BY: K. FRIEDLAND |
| DESIGNED BY: G. LAROCHE | CHECKED BY: W. LAMMER |
| I-91 SOUTHBOUND CROSS SECTIONS | SHEET 142 OF 166 |

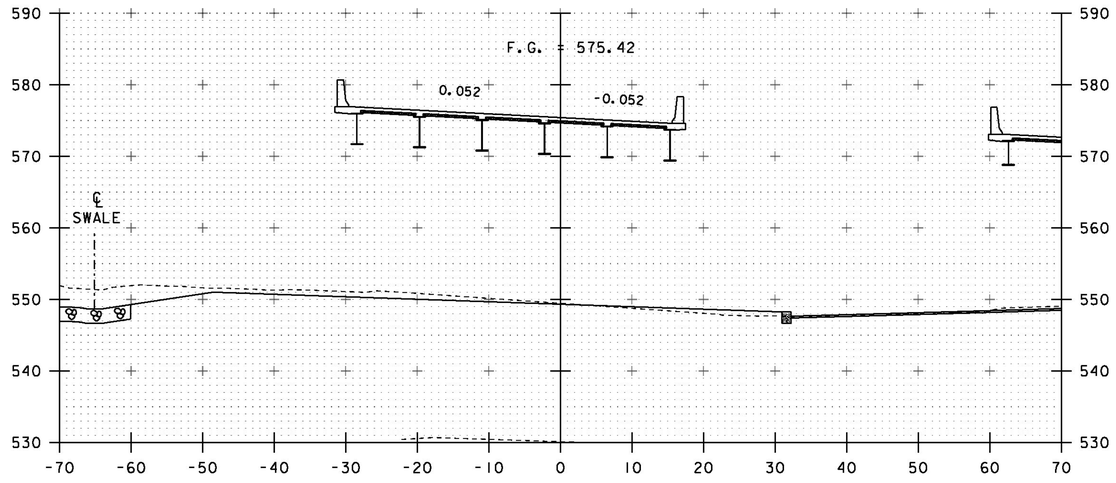


151+00

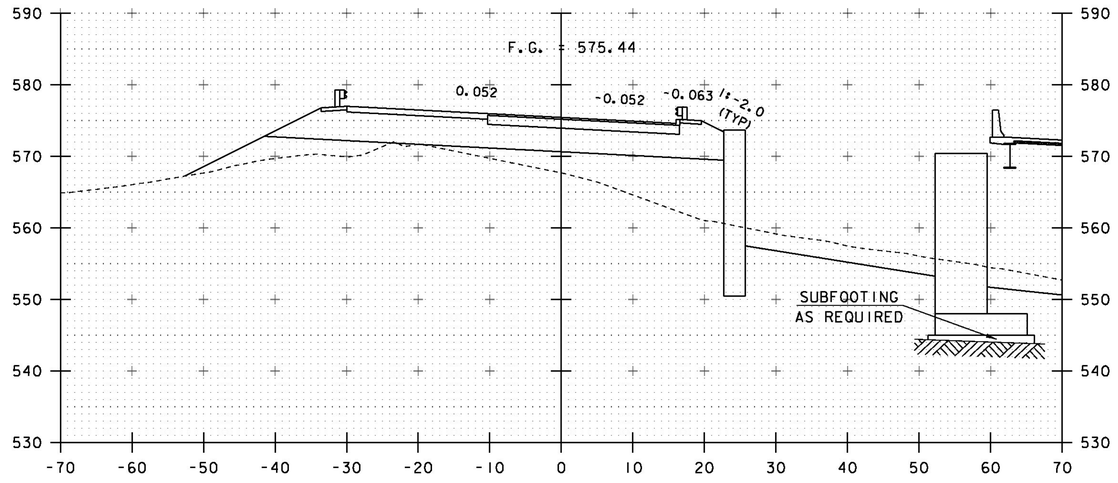


151+50

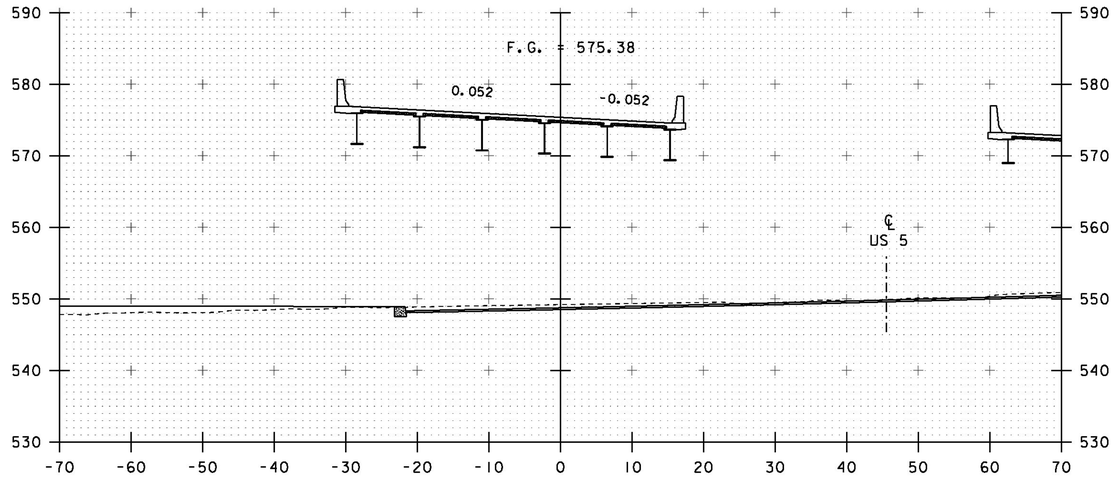


150+75

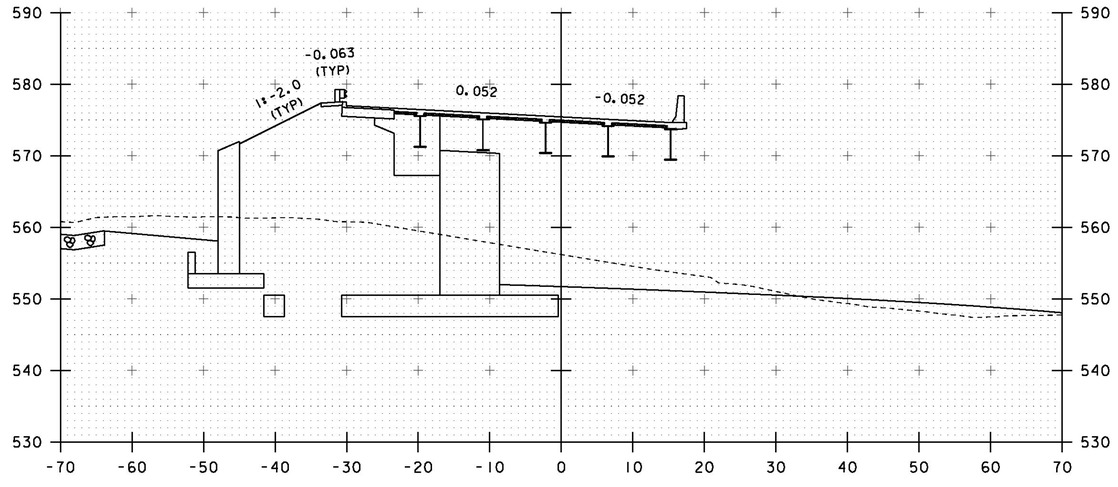


151+25

END BRIDGE 151+34.12

STA. 150+75 TO STA. 151+50

PROJECT NAME: HARTFORD
PROJECT NUMBER: IM 091-2(79)

FILE NAME: sl2al32xsec.dgn
PROJECT LEADER: K. HIGGINS
DESIGNED BY: G. LAROCHE
I-91 SOUTHBOUND CROSS SECTIONS

PLOT DATE: 15-DEC-2014
DRAWN BY: K. FRIEDLAND
CHECKED BY: W. LAMMER
SHEET 143 OF 166

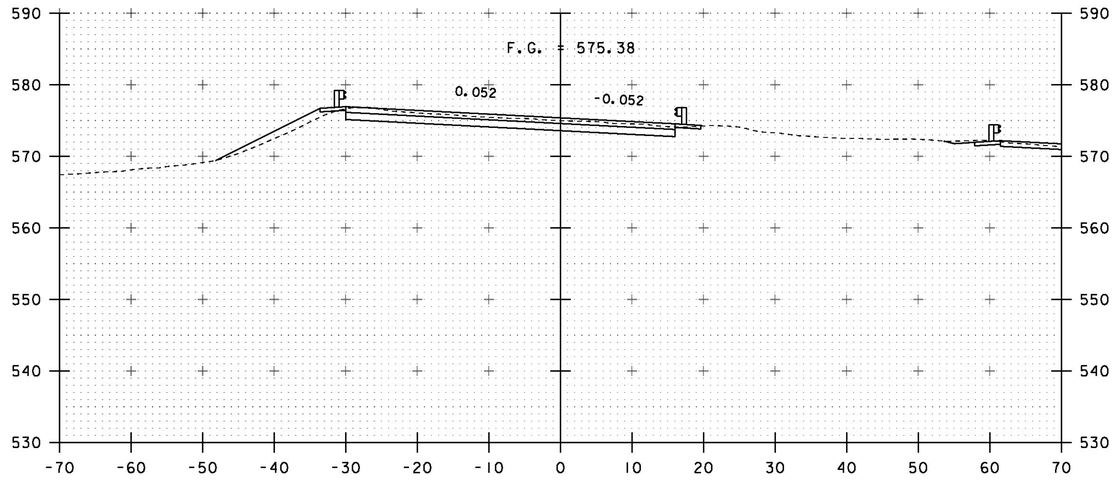


152+00

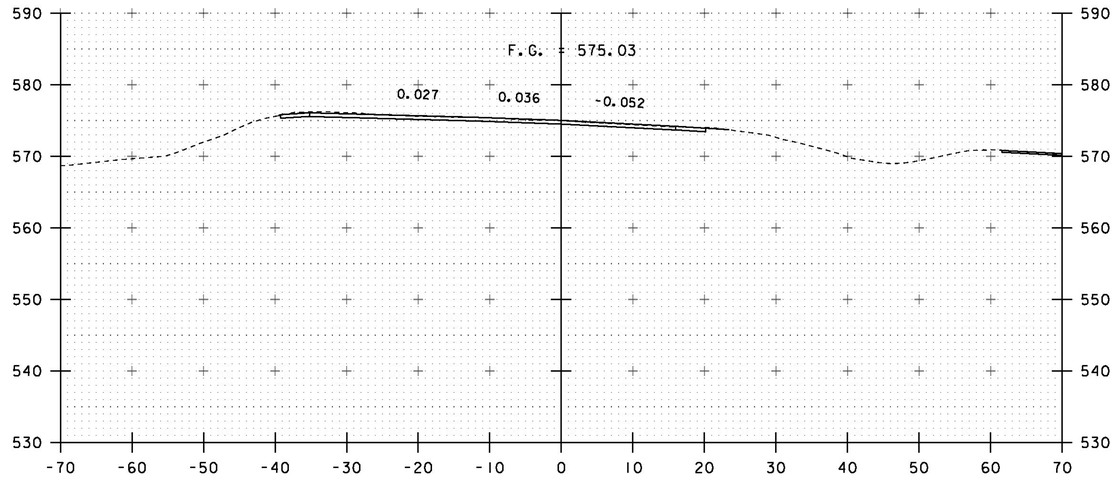


153+00

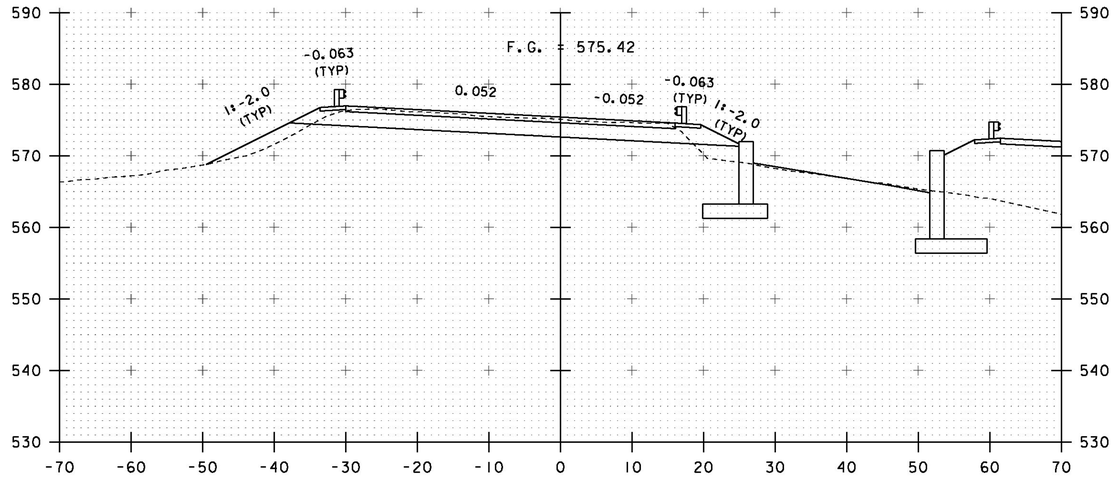


151+75
END PROJECT

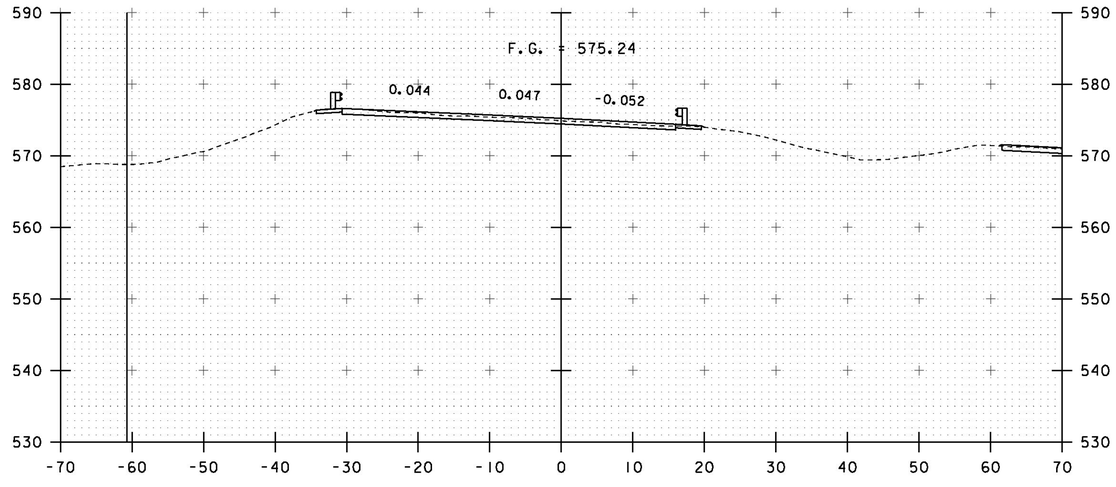


152+50

STA. 151+75 TO STA. 153+00

| | |
|---|---|
| PROJECT NAME: | HARTFORD |
| PROJECT NUMBER: | IM 091-2(79) |
| FILE NAME: sl2al32xsec.dgn | PLOT DATE: 15-DEC-2014 |
| PROJECT LEADER: K. HIGGINS | DRAWN BY: K. FRIEDLAND |
| DESIGNED BY: G. LAROCHE | CHECKED BY: W. LAMMER |
| I-91 SOUTHBOUND CROSS SECTIONS | SHEET 144 OF 166 |

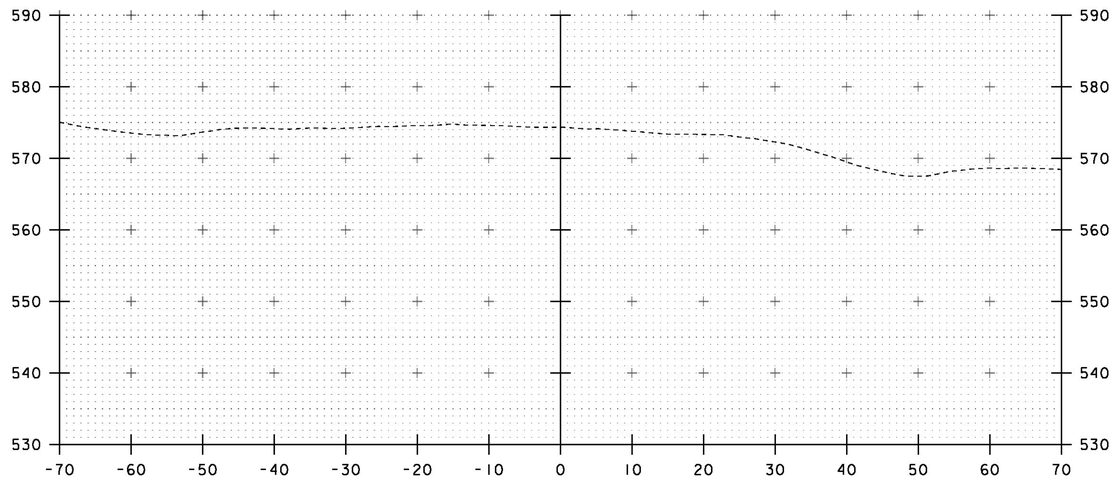


154+00

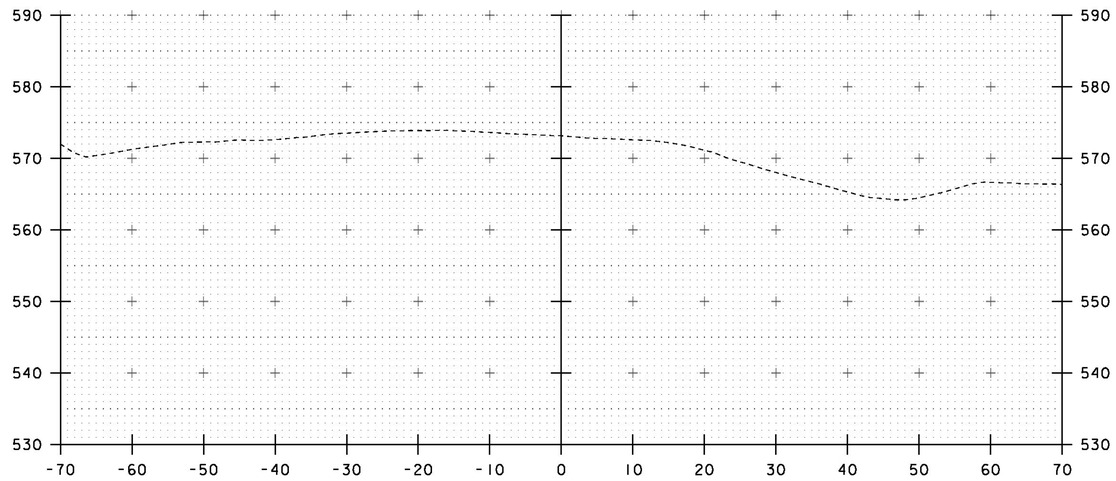


155+00

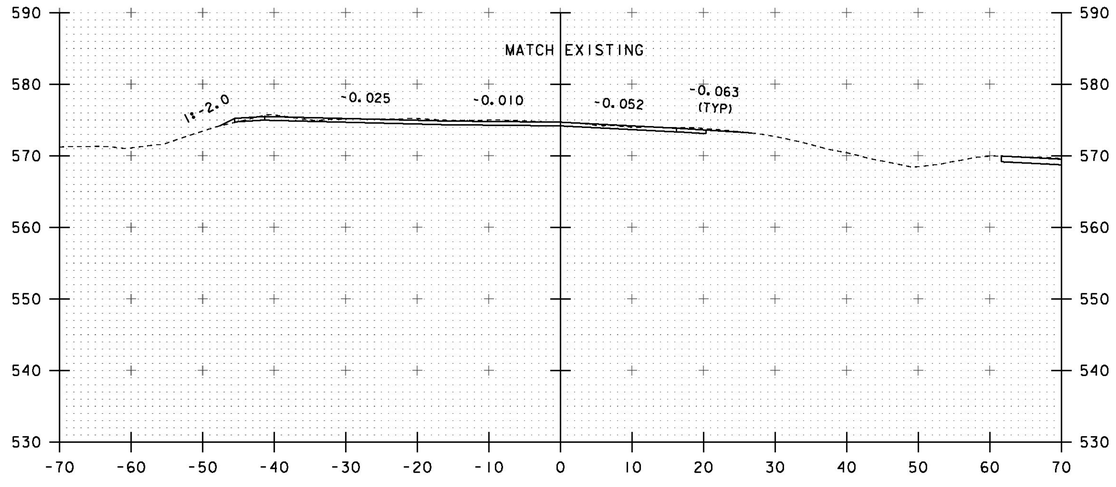


153+50
END APPROACH / PAVEMENT

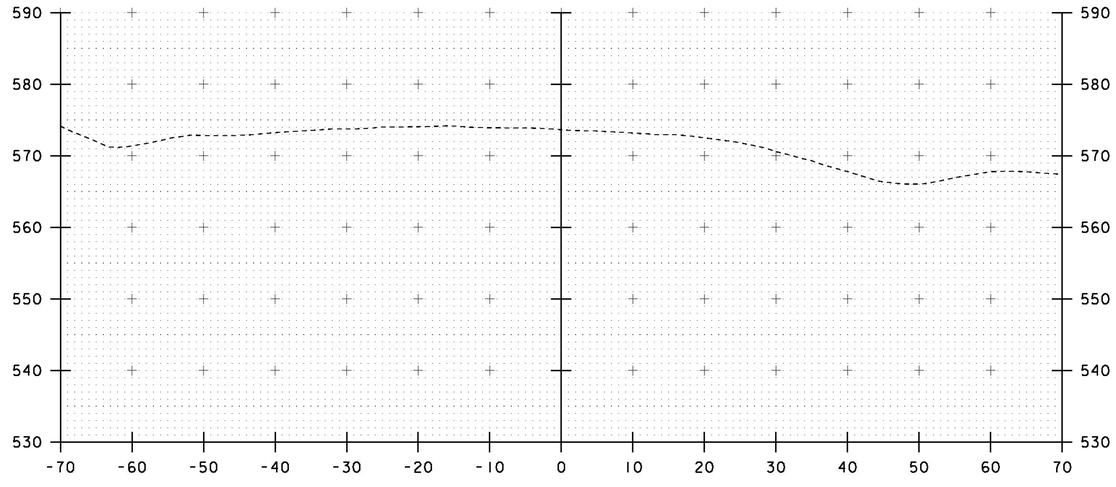


154+50

STA. 153+50 TO STA. 155+00

PROJECT NAME: HARTFORD
PROJECT NUMBER: IM 091-2(79)

FILE NAME: sl2al32xsec.dgn
PROJECT LEADER: K. HIGGINS
DESIGNED BY: G. LAROCHE
I-91 SOUTHBOUND CROSS SECTIONS

PLOT DATE: 15-DEC-2014
DRAWN BY: K. FRIEDLAND
CHECKED BY: W. LAMMER
SHEET 145 OF 166

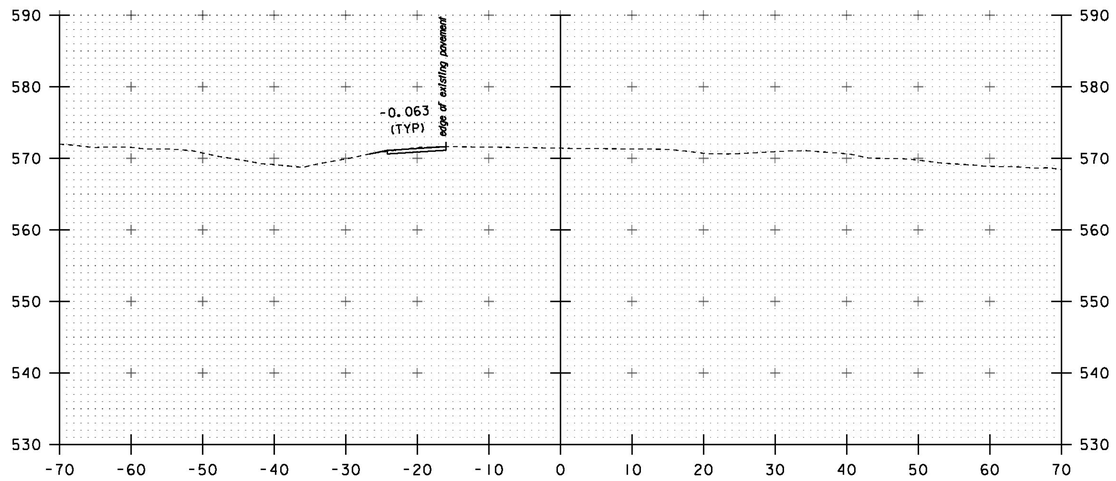


246+50

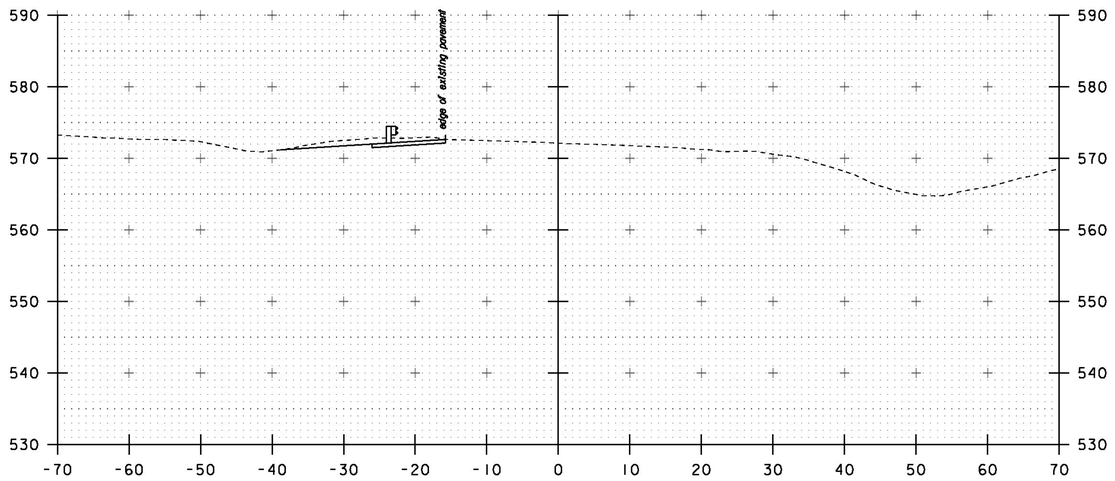


247+50

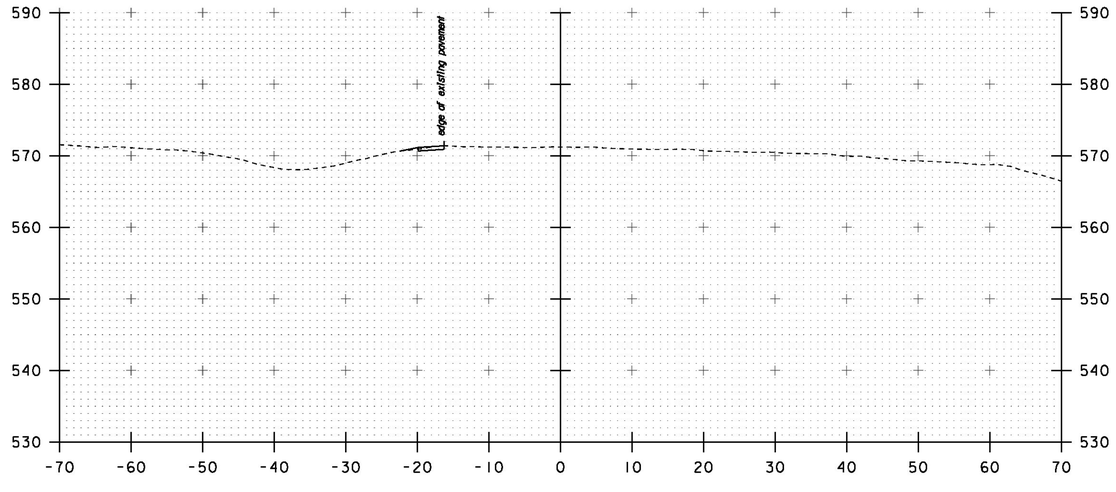


246+25
BEGIN APPROACH 246+05

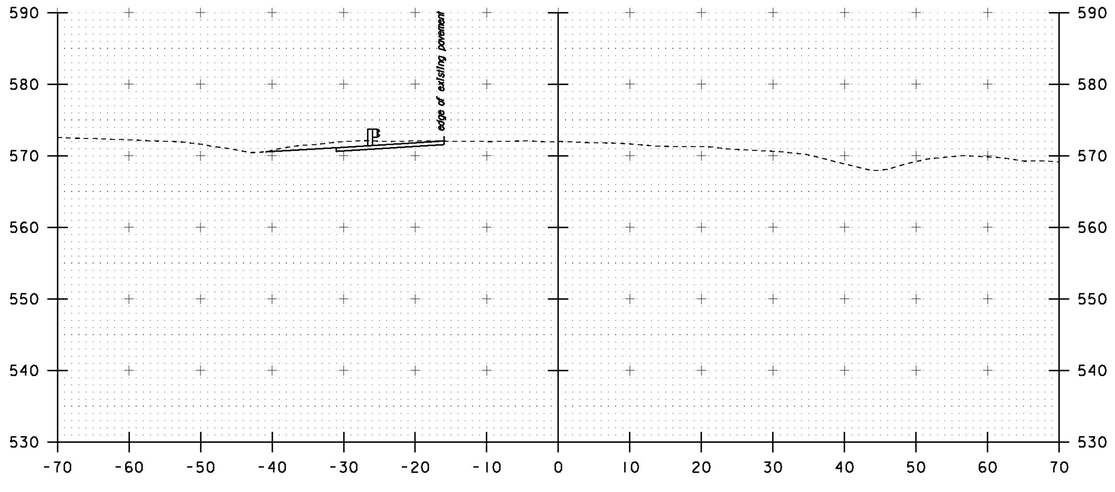


247+00

STA. 246+25 TO STA. 247+50

PROJECT NAME: HARTFORD
PROJECT NUMBER: IM 091-2(79)

FILE NAME: s12a132xsec.dgn
PROJECT LEADER: K. HIGGINS
DESIGNED BY: G. LAROCHE
I-91 NORTHBOUND CROSS SECTIONS

PLOT DATE: 15-DEC-2014
DRAWN BY: K. FRIEDLAND
CHECKED BY: W. LAMMER
SHEET 146 OF 166

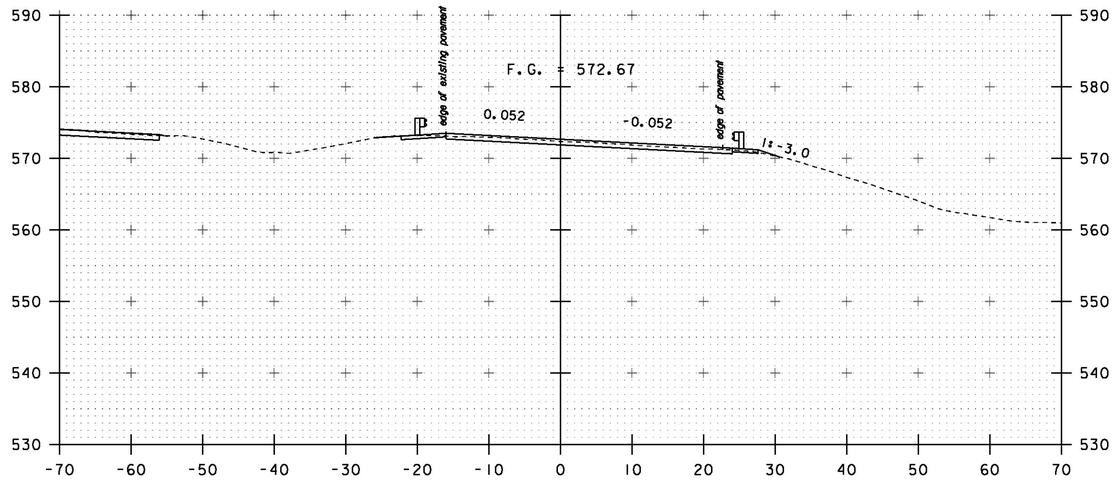


248+50

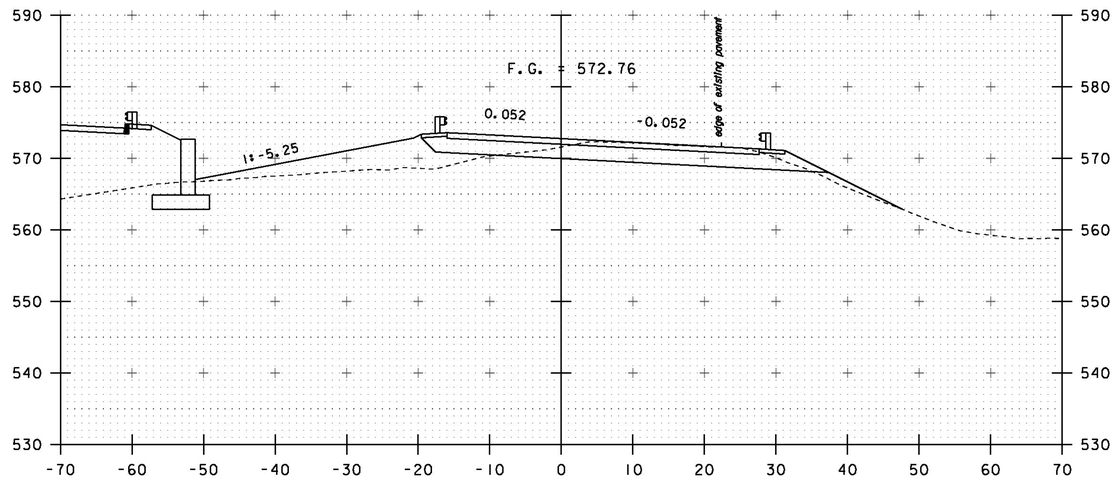


249+50
BEGIN PROJECT

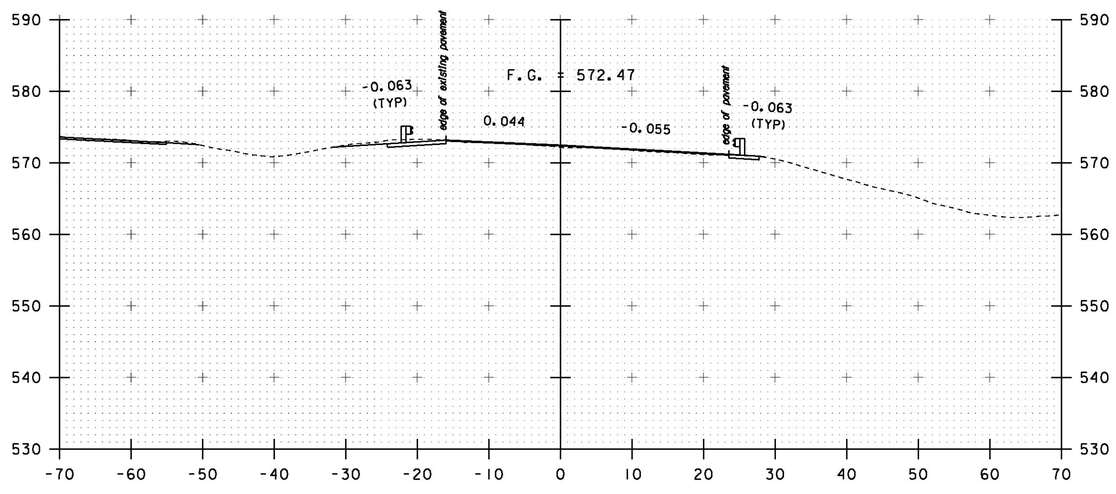


248+00
BEGIN PAVEMENT 247+75

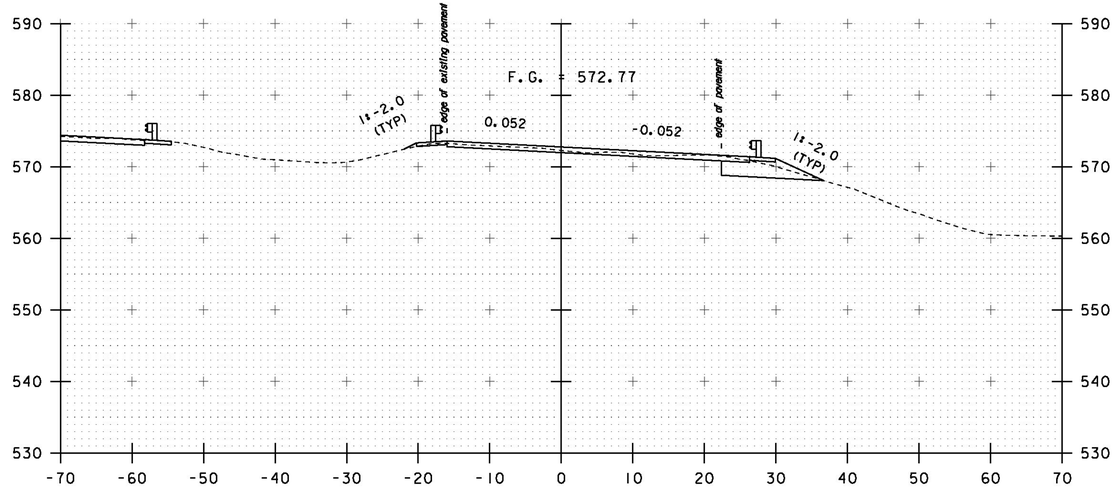


249+00

STA. 248+00 TO STA. 249+50

PROJECT NAME: HARTFORD
PROJECT NUMBER: IM 091-2(79)

FILE NAME: sl2al32xsec.dgn
PROJECT LEADER: K. HIGGINS
DESIGNED BY: G. LAROCHE
I-91 NORTHBOUND CROSS SECTIONS

PLOT DATE: 15-DEC-2014
DRAWN BY: K. FRIEDLAND
CHECKED BY: W. LAMMER
SHEET 147 OF 166

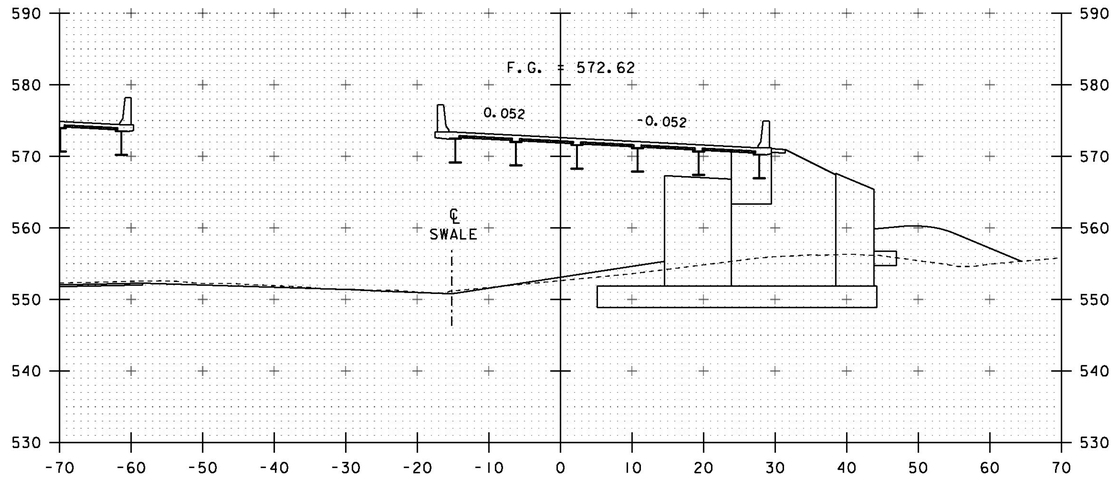


250+00
BEGIN BRIDGE 249+89.46

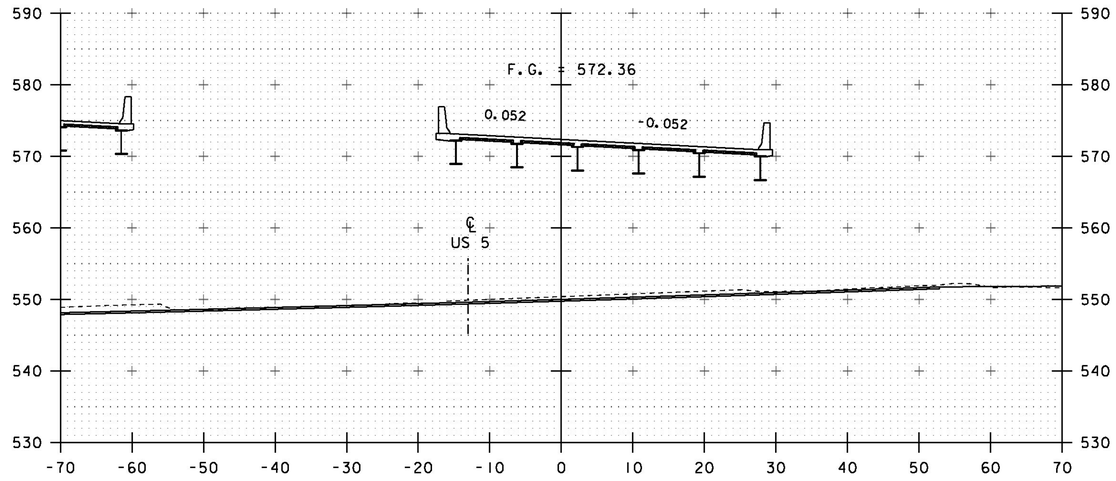


250+50

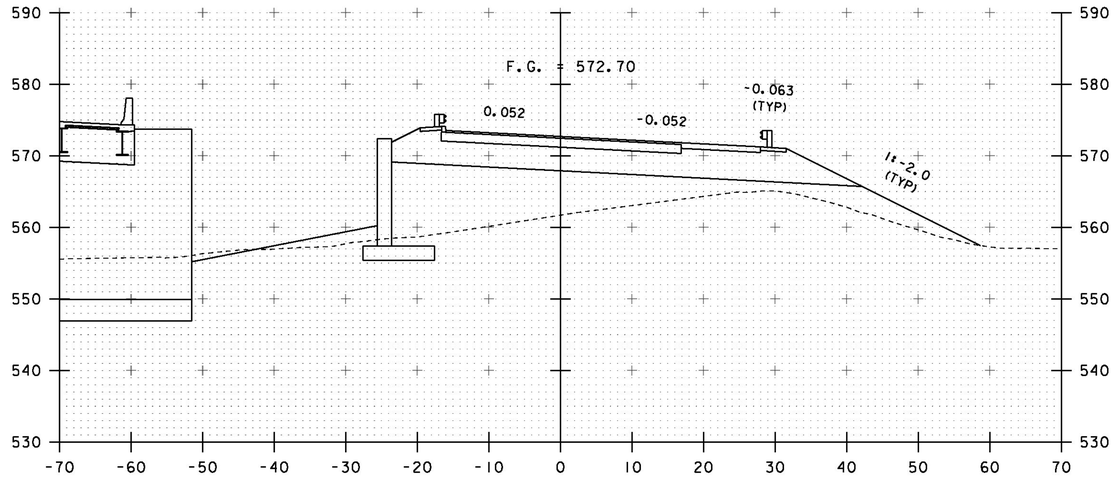


249+75

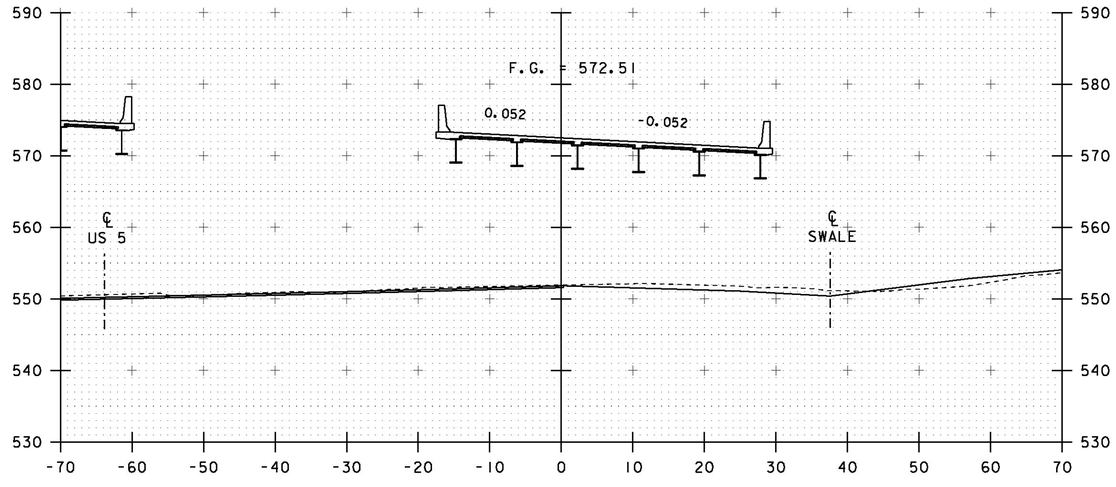


250+25

STA. 249+75 TO STA. 250+50

PROJECT NAME: HARTFORD
PROJECT NUMBER: IM 091-2(79)

FILE NAME: s12a132xsec.dgn
PROJECT LEADER: K. HIGGINS
DESIGNED BY: G. LAROCHE
I-91 NORTHBOUND CROSS SECTIONS

PLOT DATE: 15-DEC-2014
DRAWN BY: K. FRIEDLAND
CHECKED BY: W. LAMMER
SHEET 148 OF 166

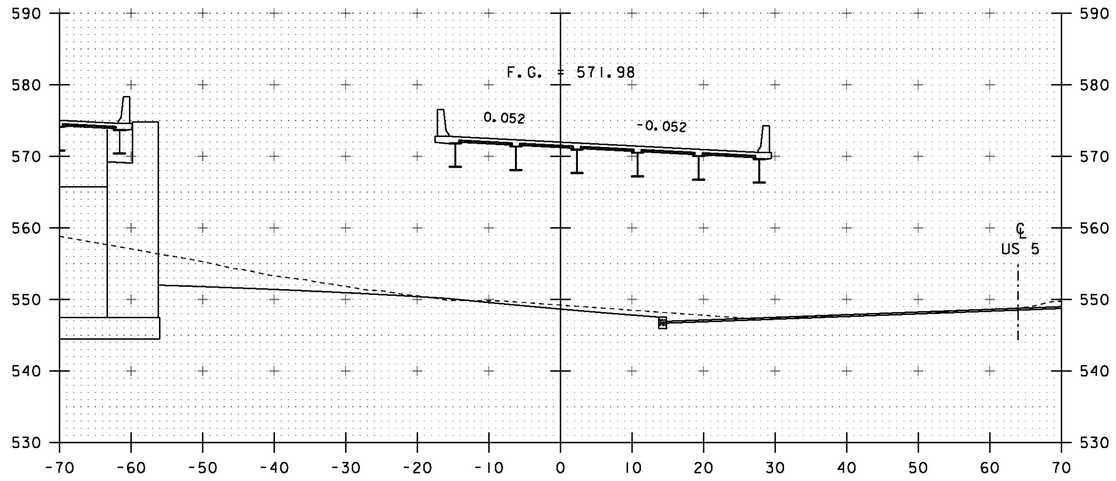


251+00

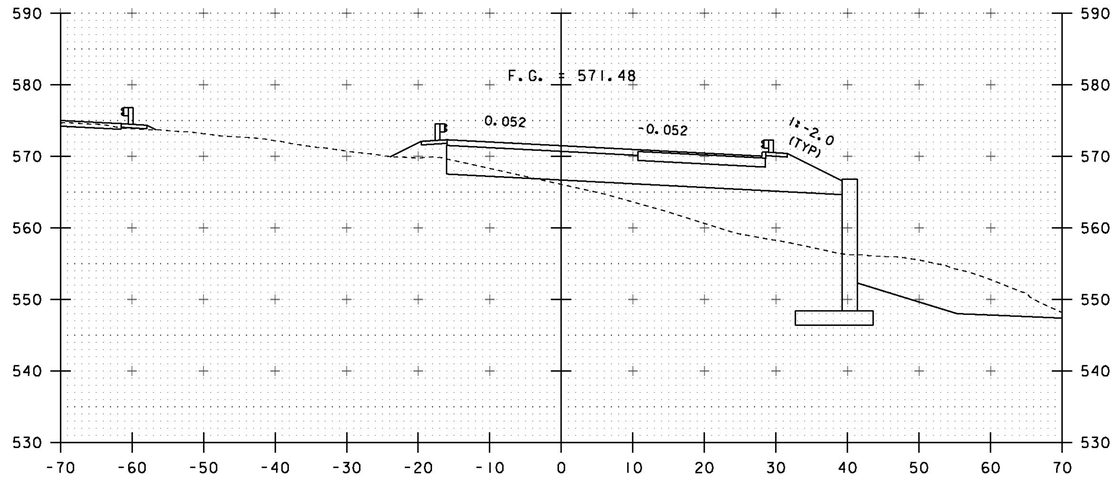


251+50

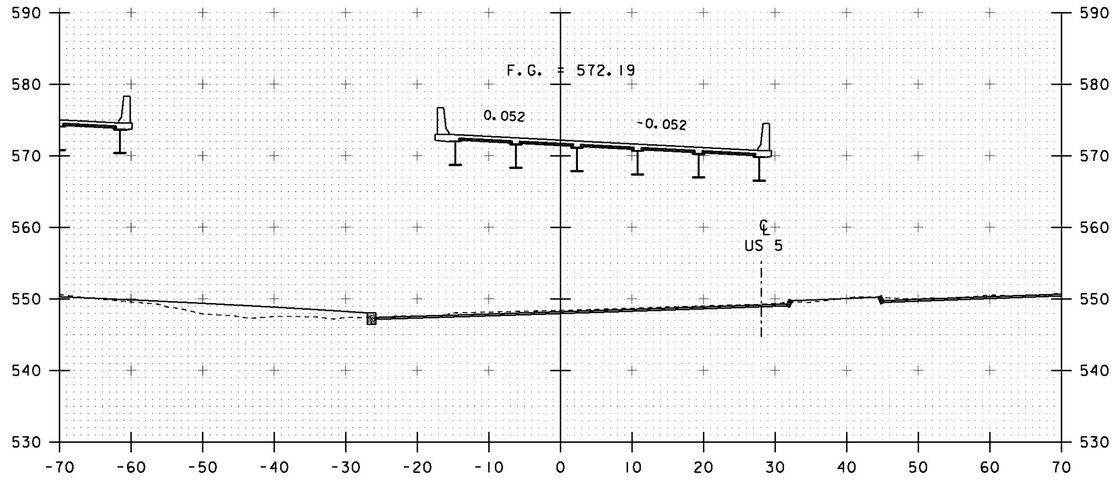


250+75

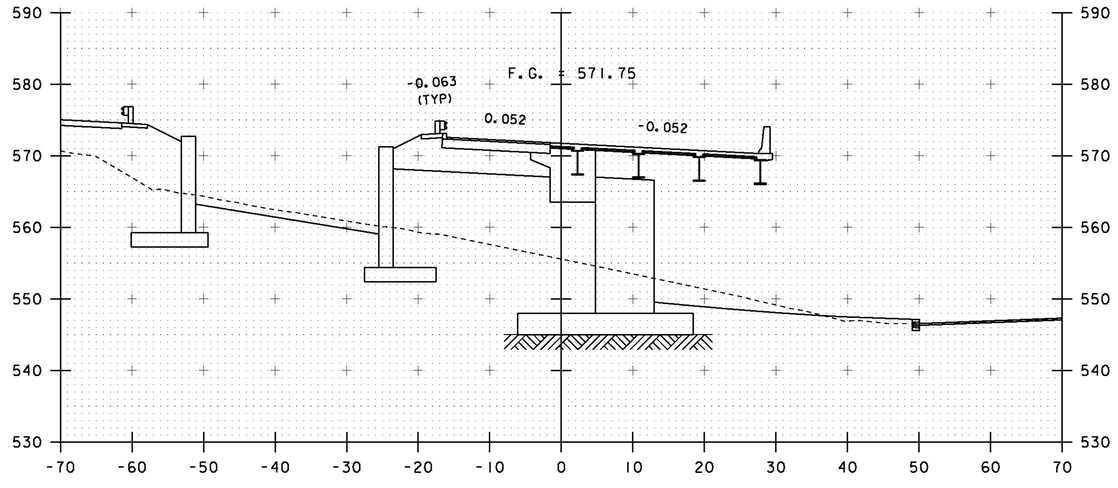


251+25

END BRIDGE 251+25.62

STA. 250+75 TO STA. 251+50

| | |
|---|---|
| PROJECT NAME: HARTFORD | |
| PROJECT NUMBER: IM 091-2(79) | |
| FILE NAME: sl2al32xsec.dgn | PLOT DATE: 15-DEC-2014 |
| PROJECT LEADER: K. HIGGINS | DRAWN BY: K. FRIEDLAND |
| DESIGNED BY: G. LAROCHE | CHECKED BY: W. LAMMER |
| I-91 NORTHBOUND CROSS SECTIONS | SHEET 149 OF 166 |

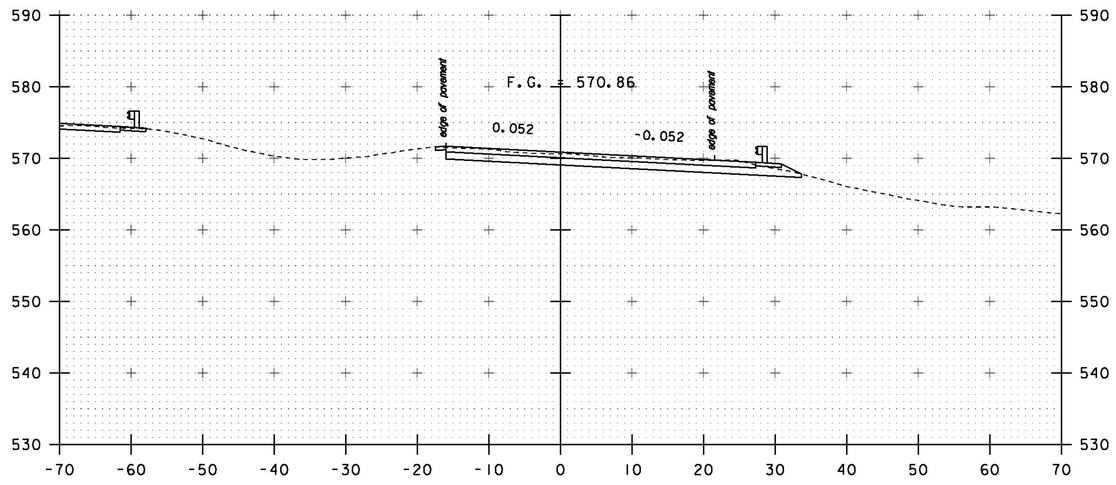


252+00

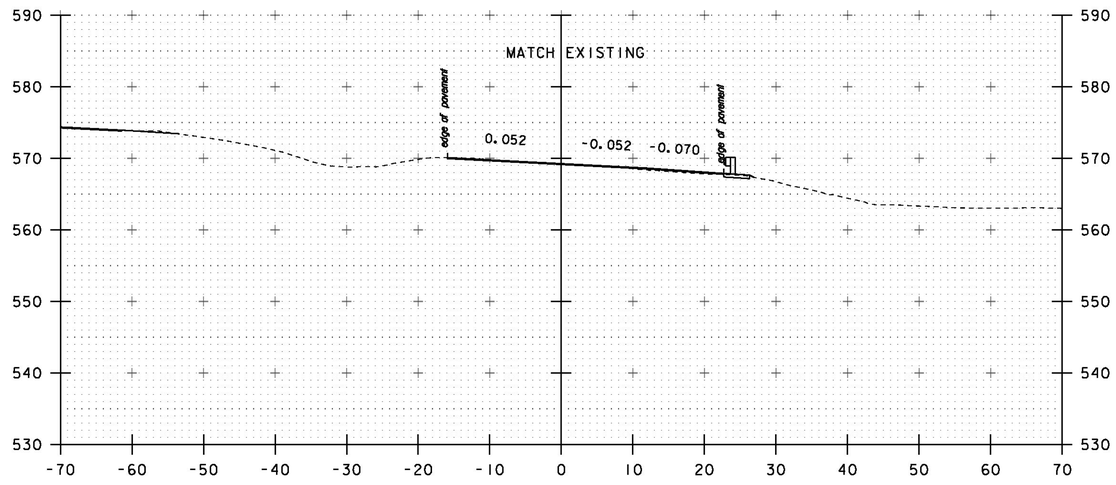


253+00
END APPROACH / PAVEMENT

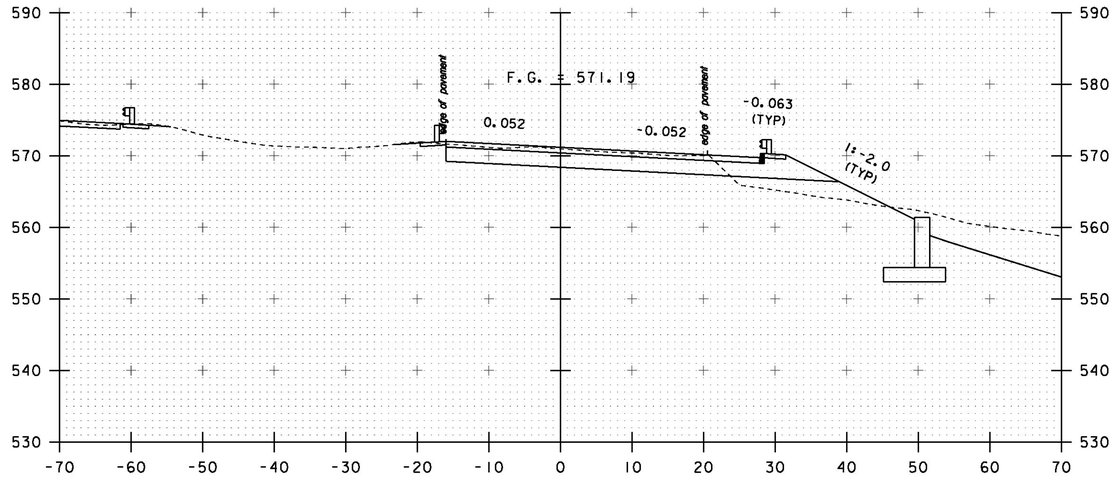


251+75
END PROJECT

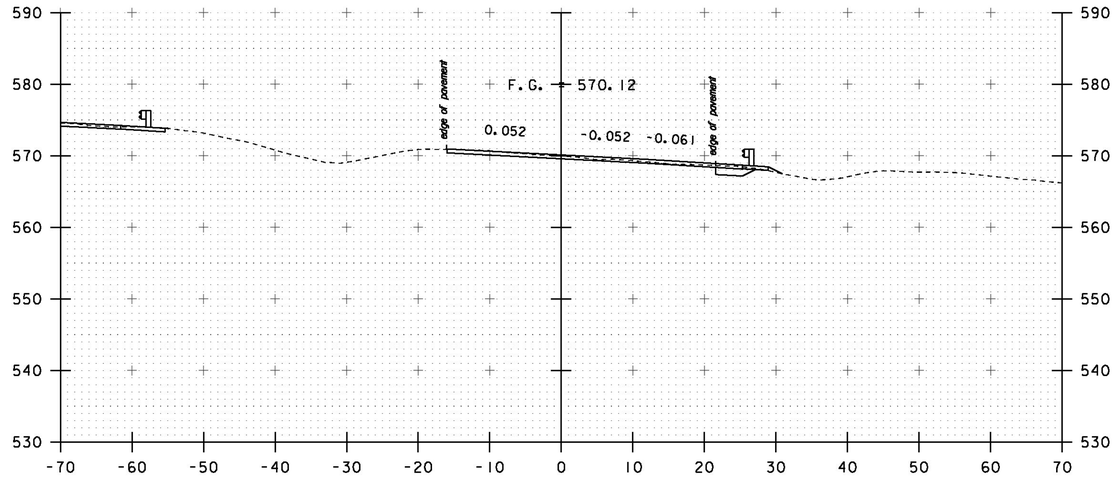


252+50

STA. 251+75 TO STA. 253+00

| | |
|---|---|
| PROJECT NAME: | HARTFORD |
| PROJECT NUMBER: | IM 091-2(79) |
| FILE NAME: sl2al32xsec.dgn | PLOT DATE: 15-DEC-2014 |
| PROJECT LEADER: K. HIGGINS | DRAWN BY: K. FRIEDLAND |
| DESIGNED BY: G. LAROCHE | CHECKED BY: W. LAMMER |
| I-91 NORTHBOUND CROSS SECTIONS | SHEET 150 OF 166 |

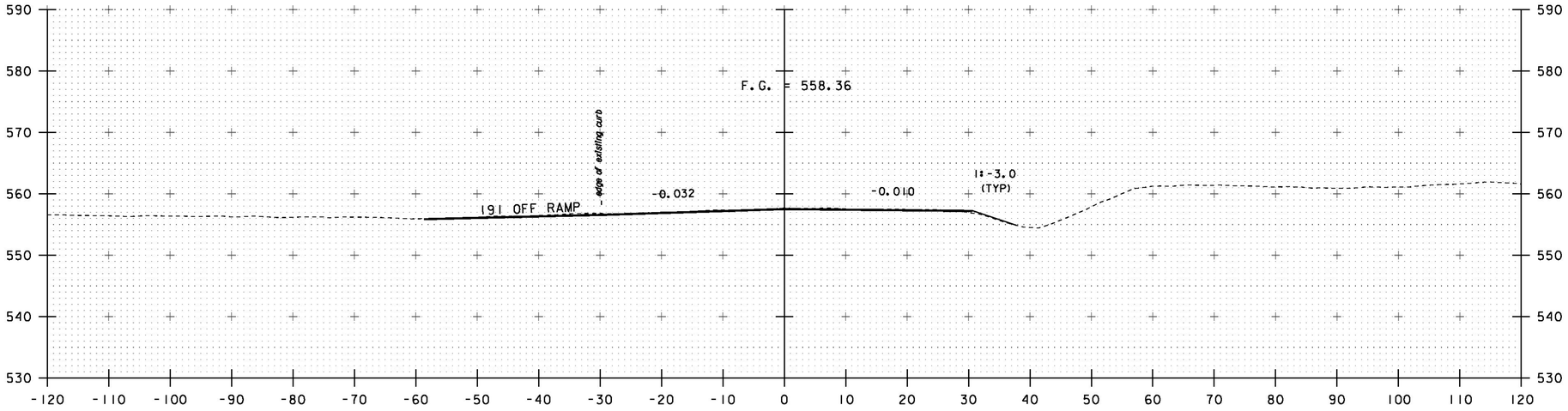


348+50

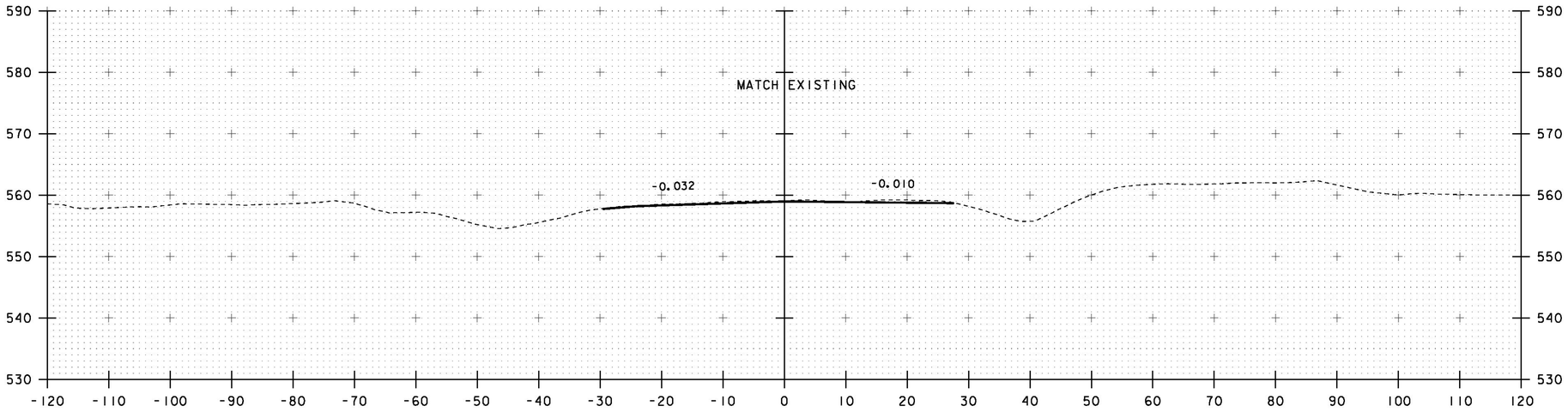


BEING PAVEMENT
348+00

STA. 348+00 TO STA. 348+50

PROJECT NAME: HARTFORD
PROJECT NUMBER: IM 091-2(79)

FILE NAME: sl2al32xsec.dgn
PROJECT LEADER: K. HIGGINS
DESIGNED BY: G. LAROCHE
US 5 CROSS SECTIONS

PLOT DATE: 15-DEC-2014
DRAWN BY: K. FRIEDLAND
CHECKED BY: W. LAMMER
SHEET 151 OF 166

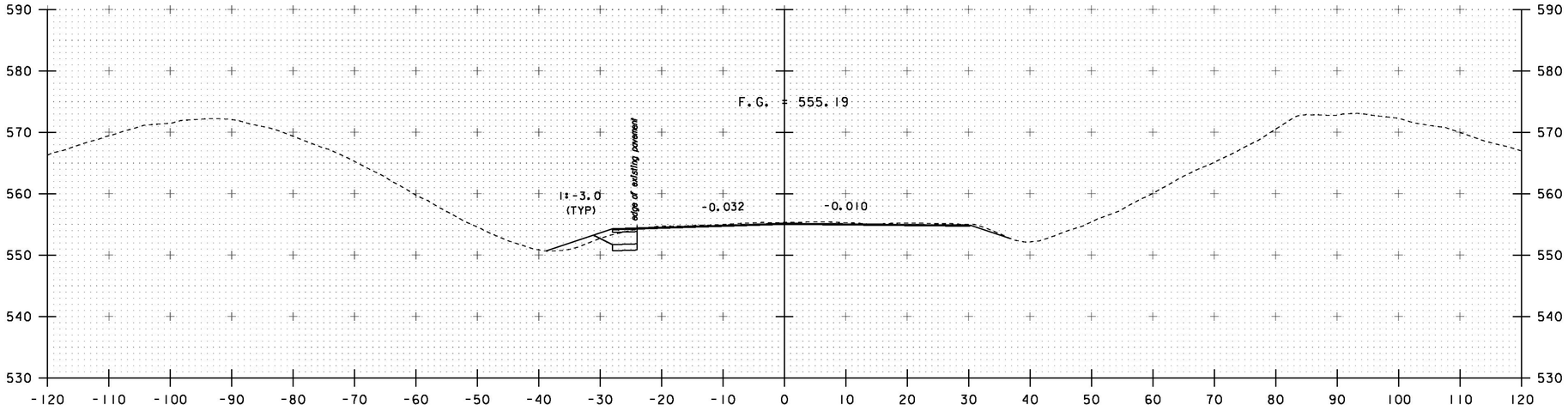


349+50

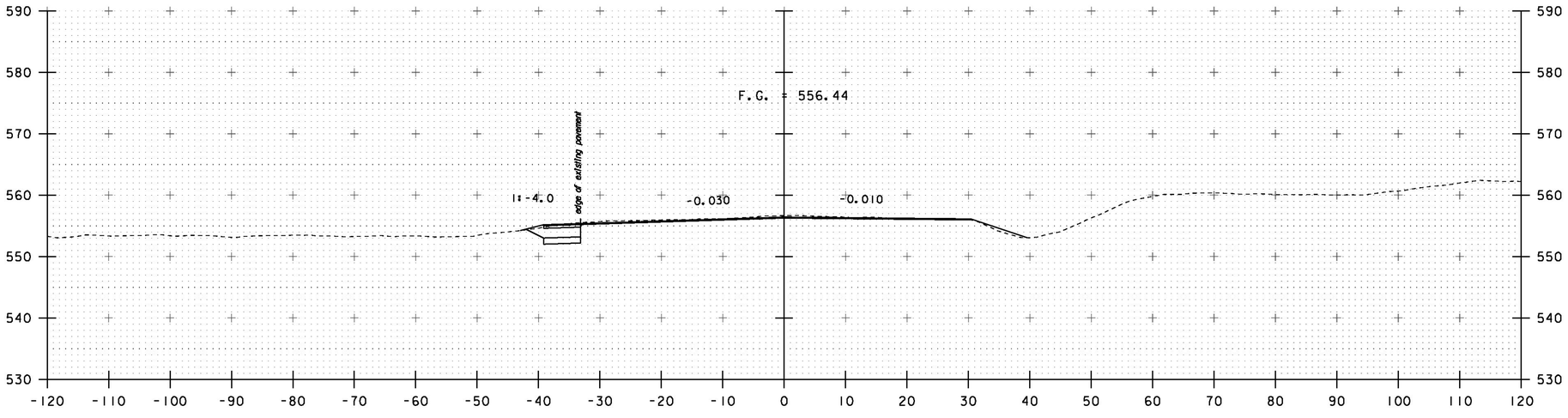


349+00

STA. 349+00 TO STA. 349+50

PROJECT NAME: HARTFORD
PROJECT NUMBER: IM 091-2(79)

FILE NAME: sl2al32xsec.dgn
PROJECT LEADER: K. HIGGINS
DESIGNED BY: G. LAROCHE
US 5 CROSS SECTIONS

PLOT DATE: 15-DEC-2014
DRAWN BY: K. FRIEDLAND
CHECKED BY: W. LAMMER
SHEET 152 OF 166

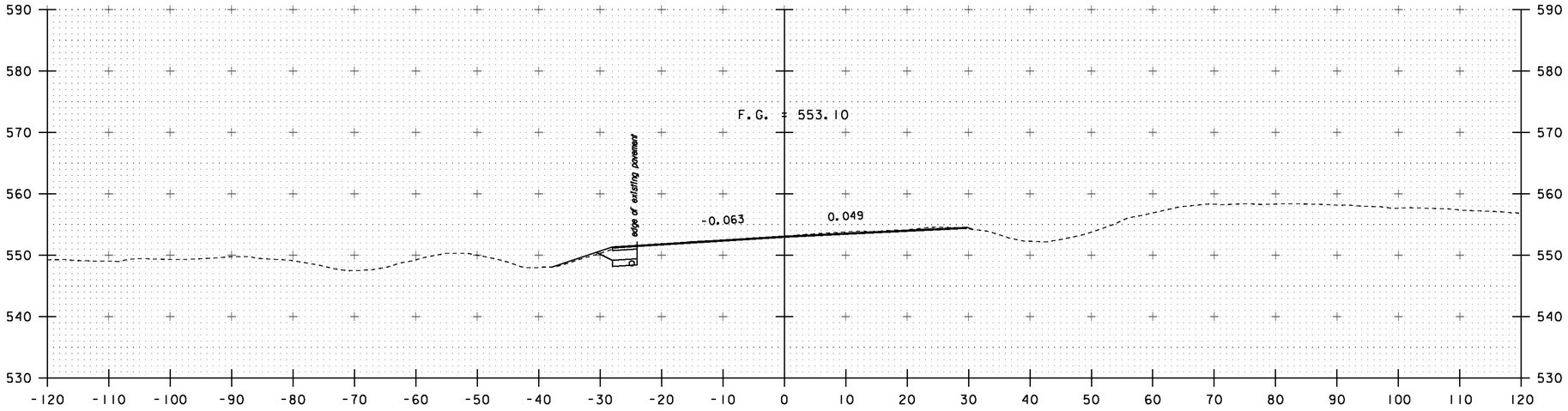


350+50

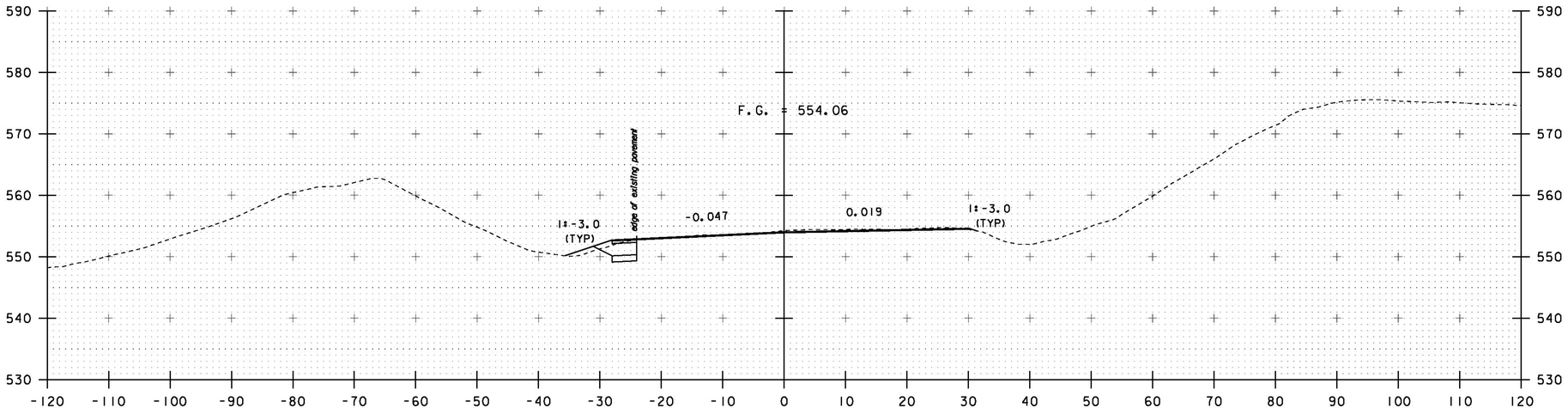


350+00

STA. 350+00 TO STA. 350+50

PROJECT NAME: HARTFORD
PROJECT NUMBER: IM 091-2(79)

FILE NAME: sl2al32xsec.dgn
PROJECT LEADER: K. HIGGINS
DESIGNED BY: G. LAROCHE
US 5 CROSS SECTIONS

PLOT DATE: 15-DEC-2014
DRAWN BY: K. FRIEDLAND
CHECKED BY: W. LAMMER
SHEET 153 OF 166

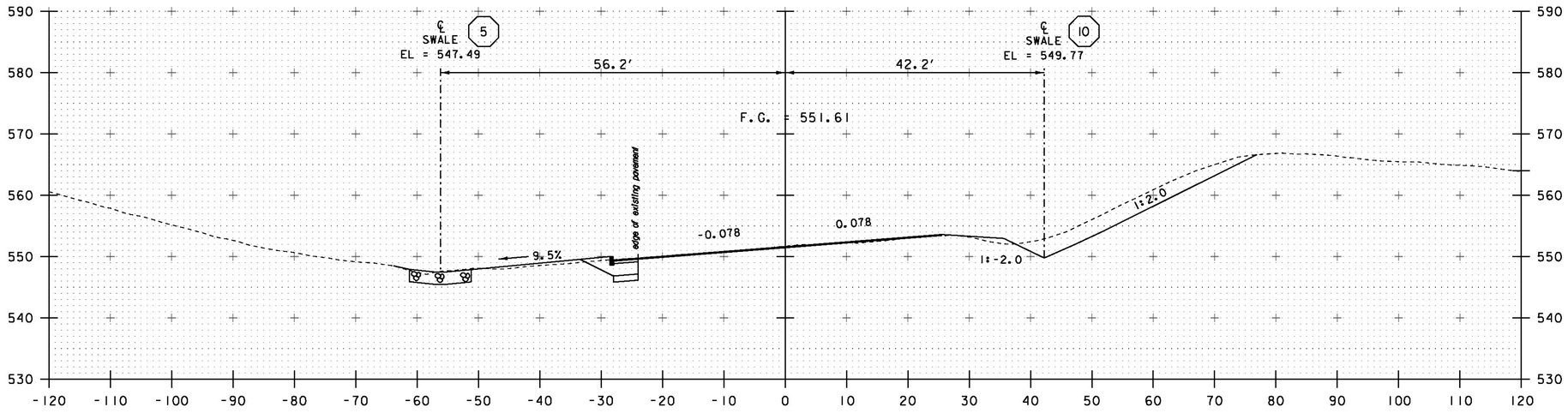


351+50

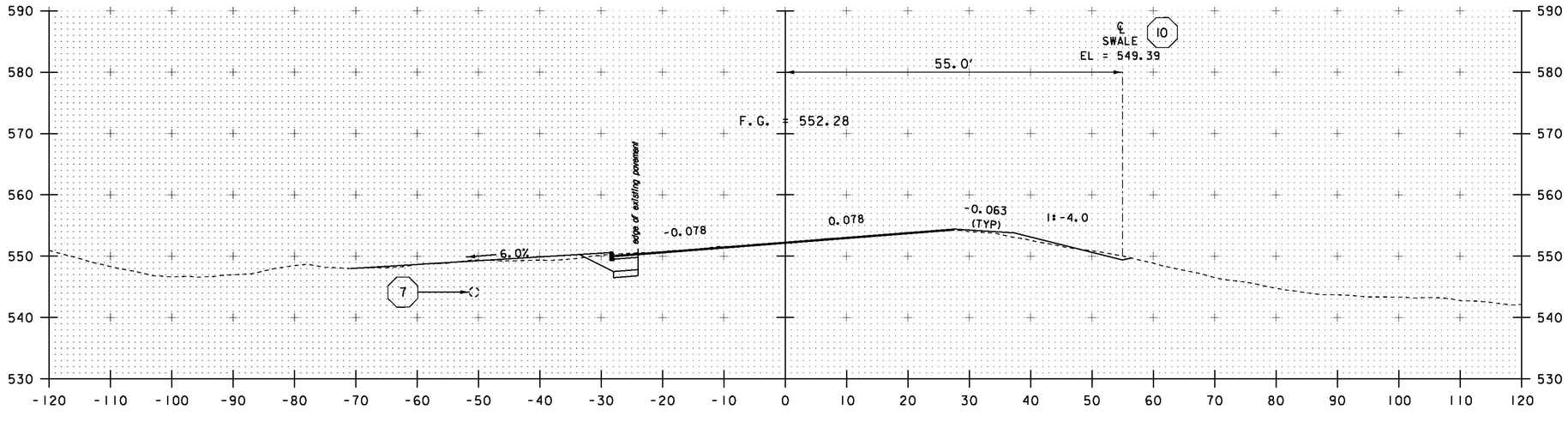


351+00

STA. 351+00 TO STA. 351+50

| | |
|---|---|
| PROJECT NAME: | HARTFORD |
| PROJECT NUMBER: | IM 091-2(79) |
| FILE NAME: sl2al32xsec.dgn | PLOT DATE: 15-DEC-2014 |
| PROJECT LEADER: K. HIGGINS | DRAWN BY: K. FRIEDLAND |
| DESIGNED BY: G. LAROCHE | CHECKED BY: W. LAMMER |
| US 5 CROSS SECTIONS | SHEET 154 OF 166 |

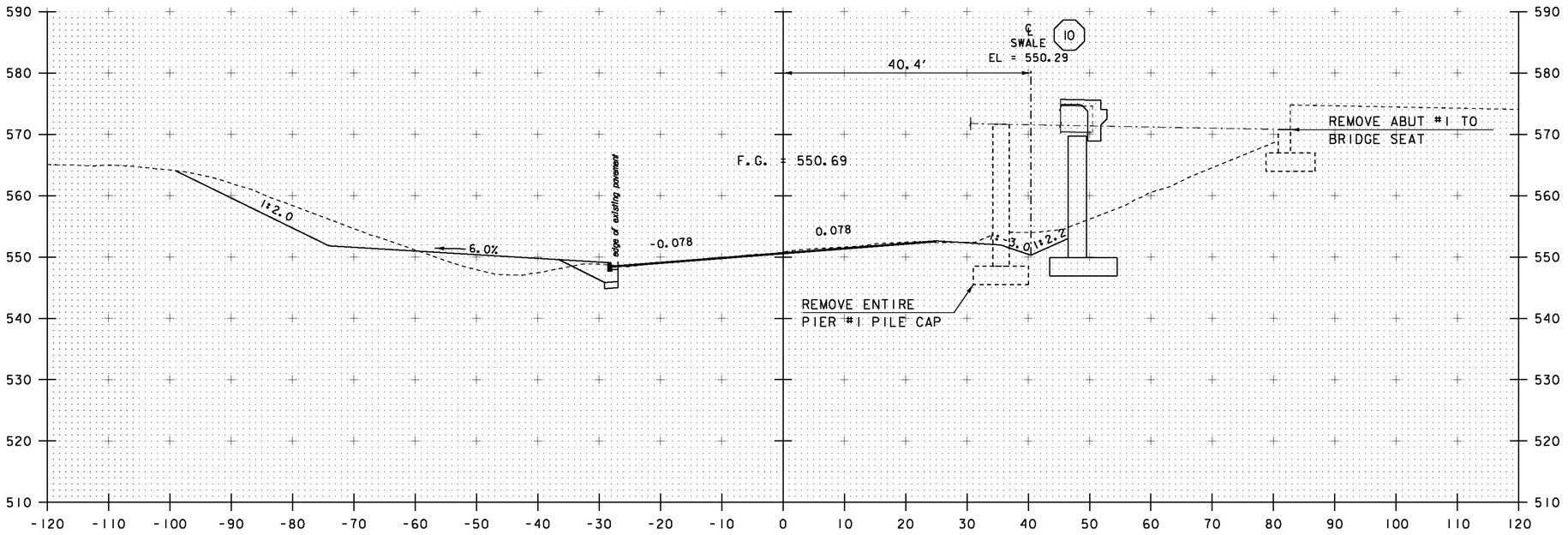


352+25

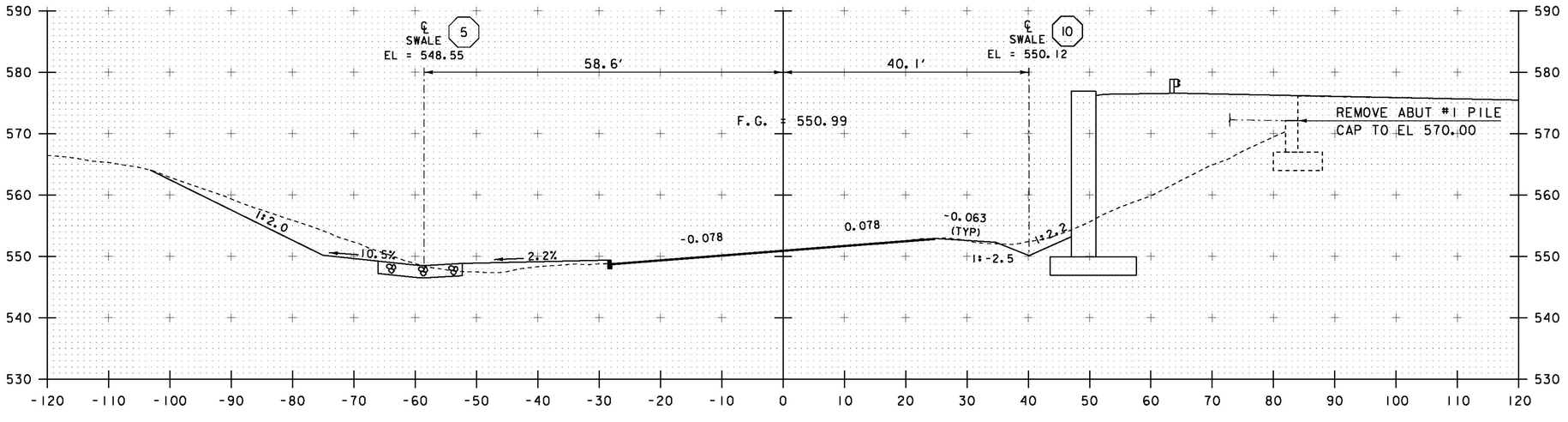


352+00

STA. 352+00 TO STA. 352+25

| | |
|---|---|
| PROJECT NAME: | HARTFORD |
| PROJECT NUMBER: | IM 091-2(79) |
| FILE NAME: sl2al32xsec.dgn | PLOT DATE: 15-DEC-2014 |
| PROJECT LEADER: K. HIGGINS | DRAWN BY: K. FRIEDLAND |
| DESIGNED BY: G. LAROCHE | CHECKED BY: W. LAMMER |
| US 5 CROSS SECTIONS | SHEET 155 OF 166 |

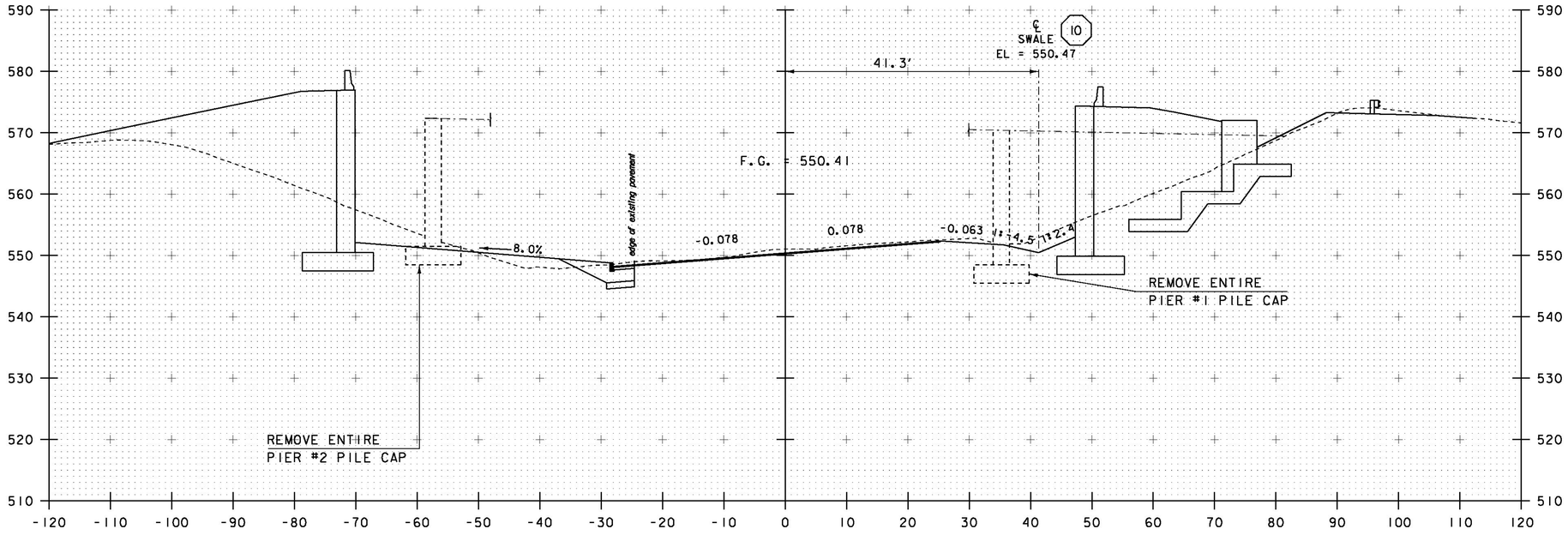


352+50

STA. 352+50 TO STA. 352+50

| | |
|---|---|
| PROJECT NAME: | HARTFORD |
| PROJECT NUMBER: | IM 091-2(79) |
| FILE NAME: sl2al32xsec.dgn | PLOT DATE: 15-DEC-2014 |
| PROJECT LEADER: K. HIGGINS | DRAWN BY: K. FRIEDLAND |
| DESIGNED BY: G. LAROCHE | CHECKED BY: W. LAMMER |
| US 5 CROSS SECTIONS | SHEET 156 OF 166 |

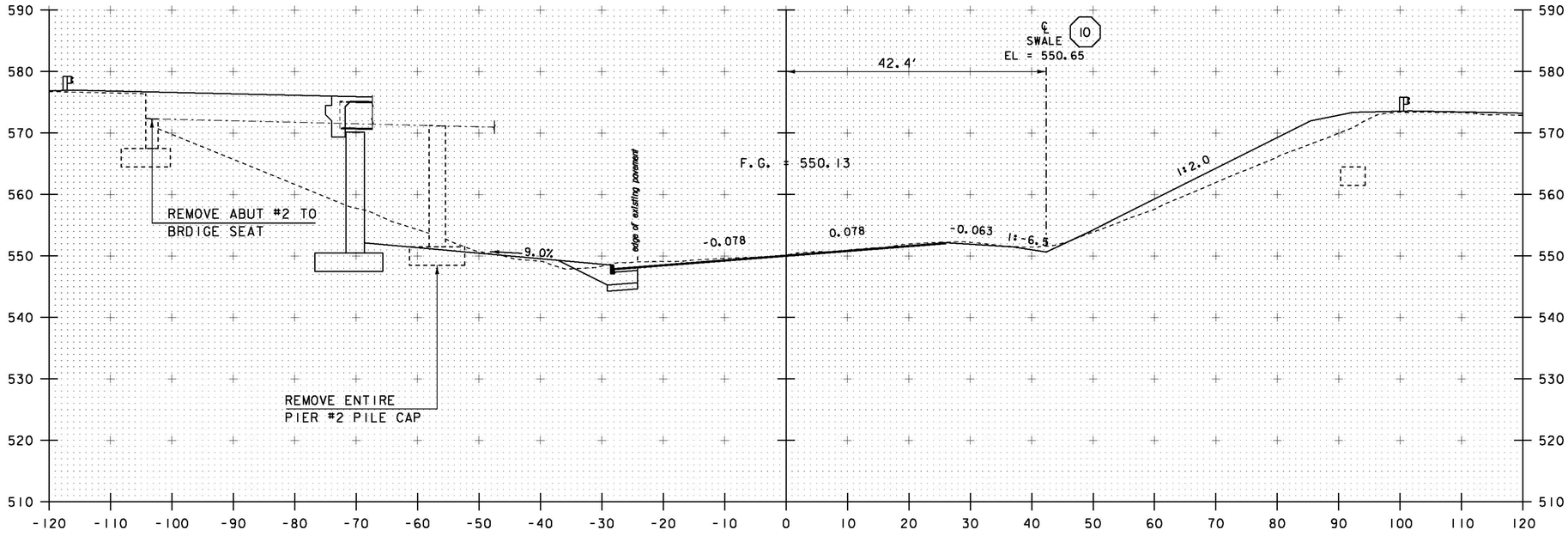


352+75

STA. 352+75 TO STA. 352+75

| | |
|---|---|
| PROJECT NAME: | HARTFORD |
| PROJECT NUMBER: | IM 091-2(79) |
| FILE NAME: sl2al32xsec.dgn | PLOT DATE: 15-DEC-2014 |
| PROJECT LEADER: K. HIGGINS | DRAWN BY: K. FRIEDLAND |
| DESIGNED BY: G. LAROCHE | CHECKED BY: W. LAMMER |
| US 5 CROSS SECTIONS | SHEET 157 OF 166 |

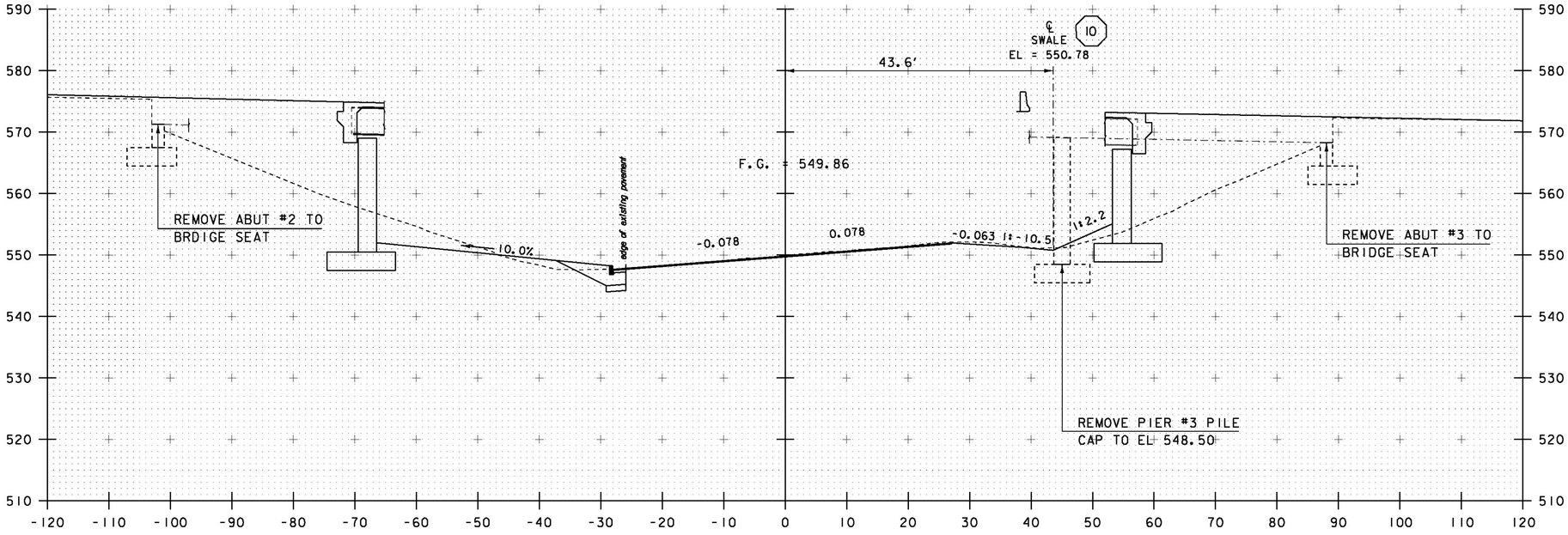


353+00

STA. 353+00 TO STA. 353+00

| | |
|---|---|
| PROJECT NAME: | HARTFORD |
| PROJECT NUMBER: | IM 091-2(79) |
| FILE NAME: sl2al32xsec.dgn | PLOT DATE: 15-DEC-2014 |
| PROJECT LEADER: K. HIGGINS | DRAWN BY: K. FRIEDLAND |
| DESIGNED BY: G. LAROCHE | CHECKED BY: W. LAMMER |
| US 5 CROSS SECTIONS | SHEET 158 OF 166 |

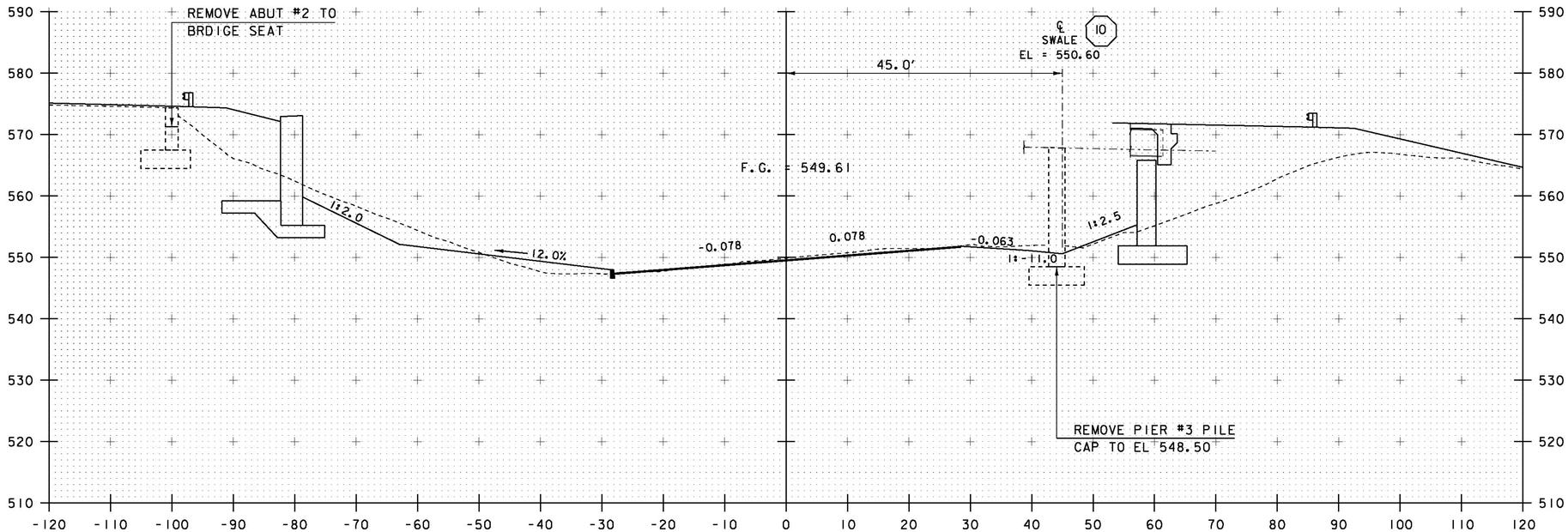


353+25

STA. 353+25 TO STA. 353+25

| | |
|---|---|
| PROJECT NAME: | HARTFORD |
| PROJECT NUMBER: | IM 091-2(79) |
| FILE NAME: sl2al32xsec.dgn | PLOT DATE: 15-DEC-2014 |
| PROJECT LEADER: K. HIGGINS | DRAWN BY: K. FRIEDLAND |
| DESIGNED BY: G. LAROCHE | CHECKED BY: W. LAMMER |
| US 5 CROSS SECTIONS | SHEET 159 OF 166 |

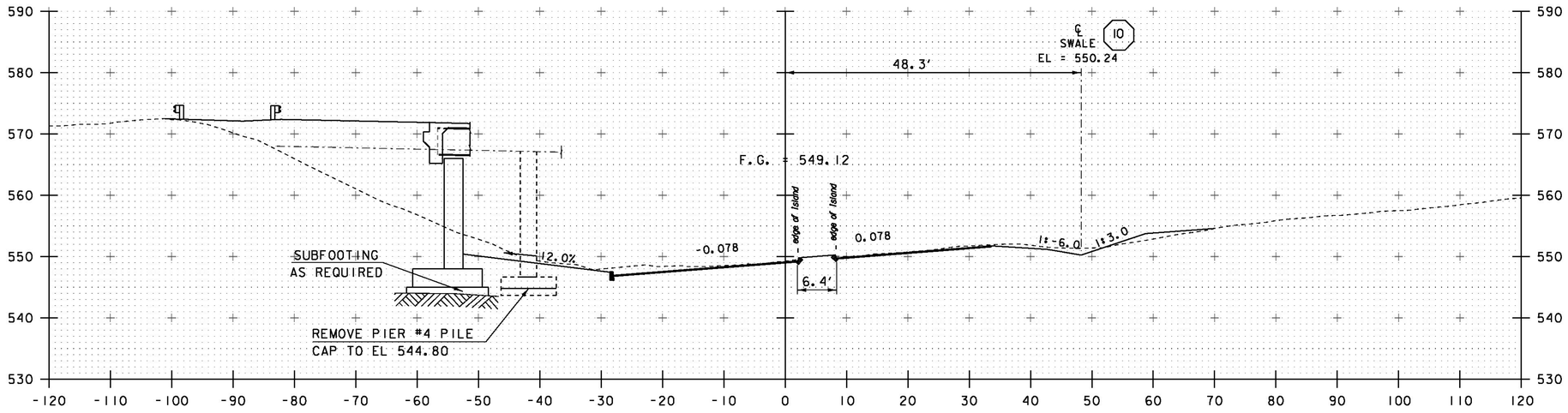


353+75

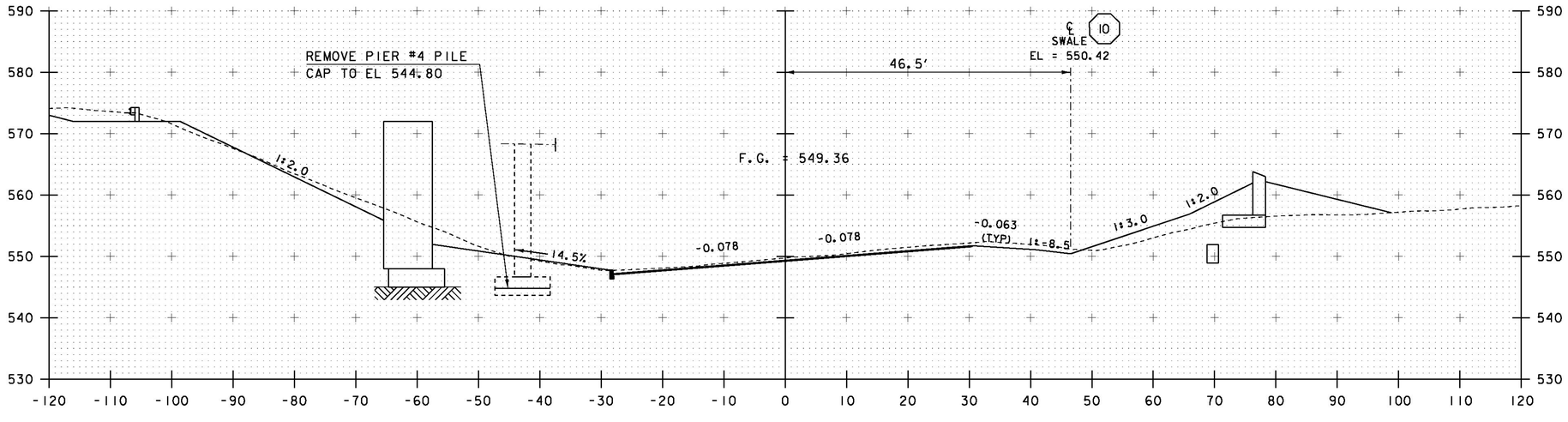


353+50

| | |
|---|---|
| PROJECT NAME: | HARTFORD |
| PROJECT NUMBER: | IM 091-2(79) |
| FILE NAME: sl2al32xsec.dgn | PLOT DATE: 15-DEC-2014 |
| PROJECT LEADER: K. HIGGINS | DRAWN BY: K. FRIEDLAND |
| DESIGNED BY: G. LAROCHE | CHECKED BY: W. LAMMER |
| US 5 CROSS SECTIONS | SHEET 160 OF 166 |

STA. 353+50 TO STA. 353+75

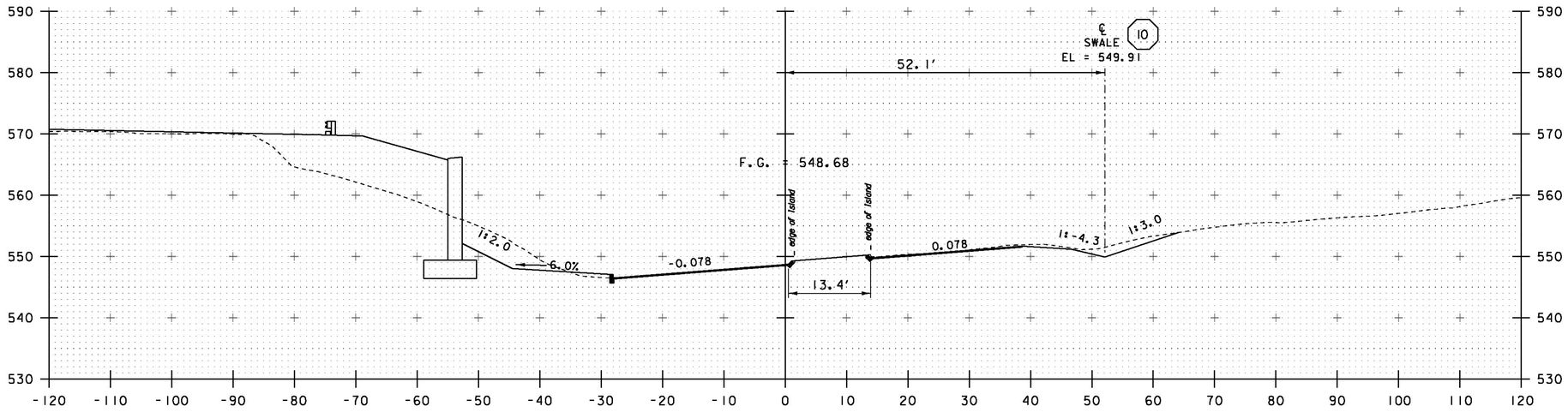


354+25

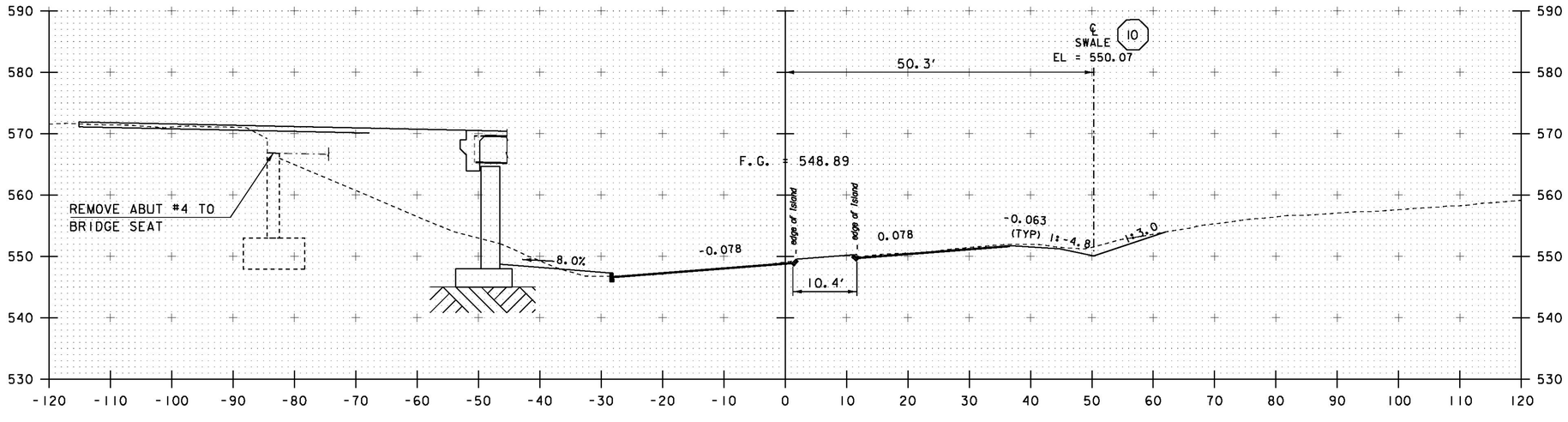


354+00

STA. 354+00 TO STA. 354+25

| | |
|---|---|
| PROJECT NAME: | HARTFORD |
| PROJECT NUMBER: | IM 091-2(79) |
| FILE NAME: s12a132xsec.dgn | PLOT DATE: 15-DEC-2014 |
| PROJECT LEADER: K. HIGGINS | DRAWN BY: K. FRIEDLAND |
| DESIGNED BY: G. LAROCHE | CHECKED BY: W. LAMMER |
| US 5 CROSS SECTIONS | SHEET 161 OF 166 |

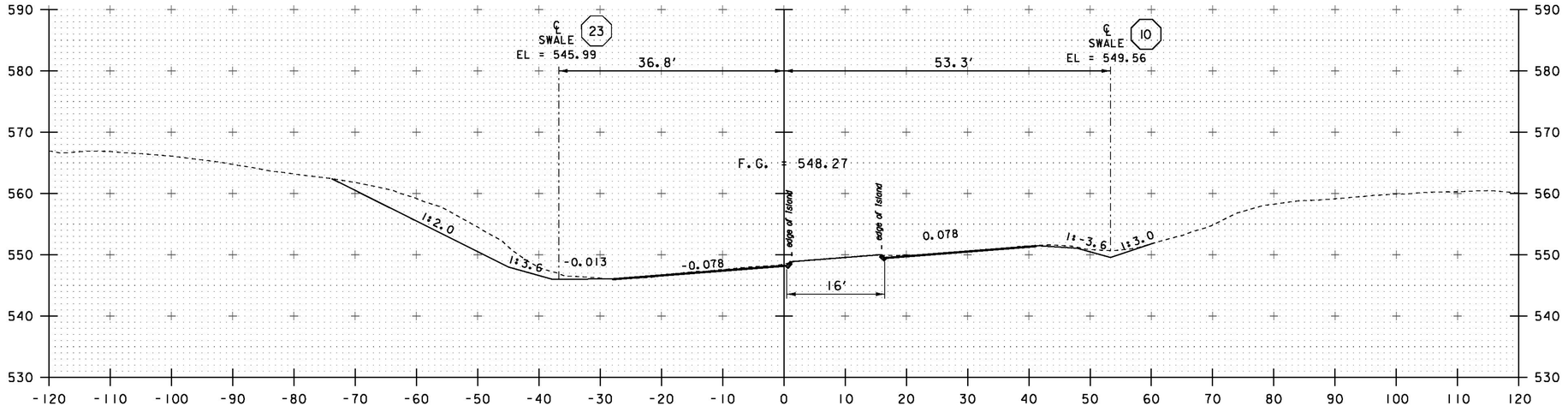


354+75

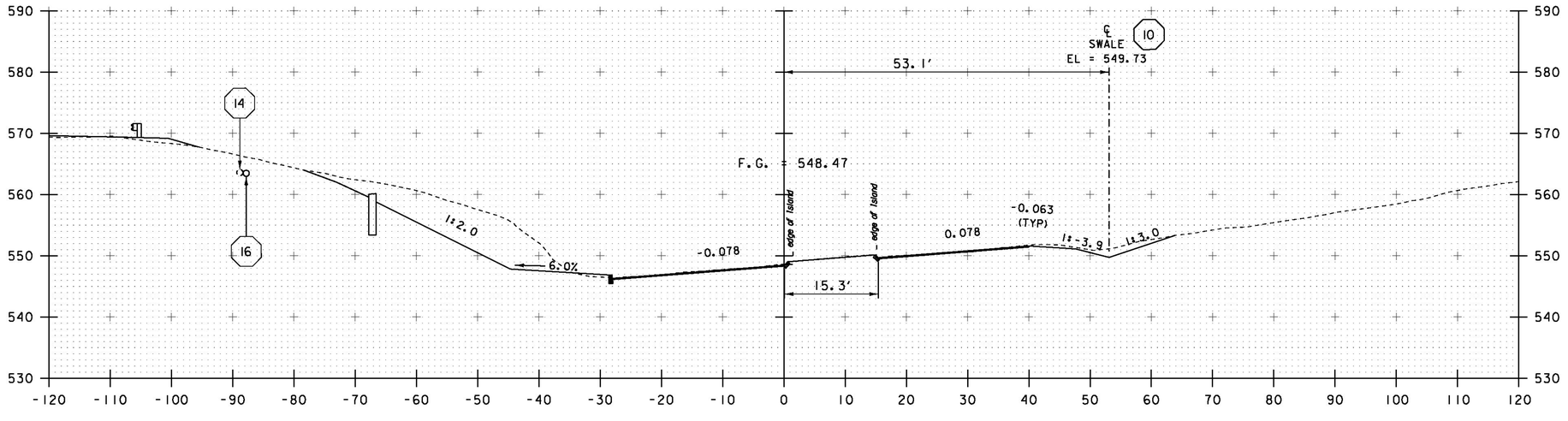


354+50

STA. 354+50 TO STA. 354+75

| | |
|---|---|
| PROJECT NAME: | HARTFORD |
| PROJECT NUMBER: | IM 091-2(79) |
| FILE NAME: sl2al32xsec.dgn | PLOT DATE: 15-DEC-2014 |
| PROJECT LEADER: K. HIGGINS | DRAWN BY: K. FRIEDLAND |
| DESIGNED BY: G. LAROCHE | CHECKED BY: W. LAMMER |
| US 5 CROSS SECTIONS | SHEET 162 OF 166 |

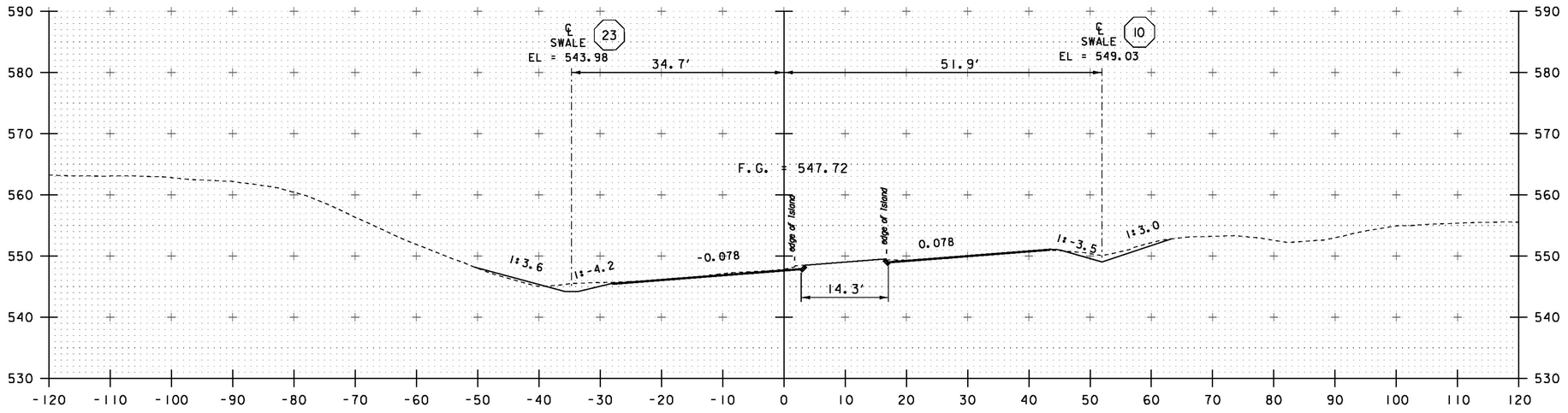


355+50

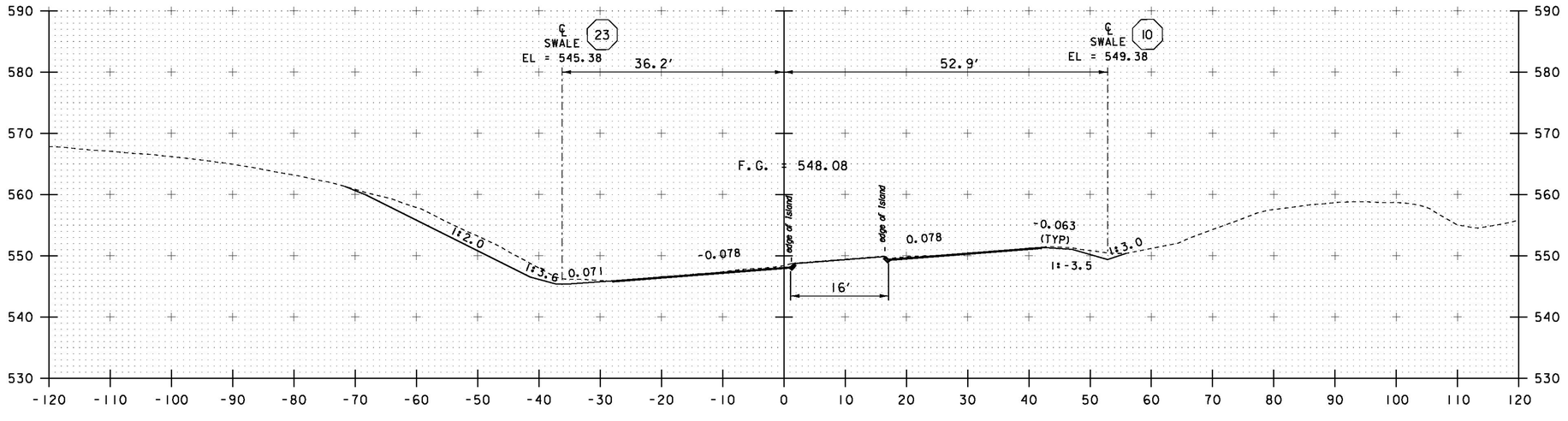


355+00

STA. 355+00 TO STA. 355+50

| | |
|---|---|
| PROJECT NAME: | HARTFORD |
| PROJECT NUMBER: | IM 091-2(79) |
| FILE NAME: s12a132xsec.dgn | PLOT DATE: 15-DEC-2014 |
| PROJECT LEADER: K. HIGGINS | DRAWN BY: K. FRIEDLAND |
| DESIGNED BY: G. LAROCHE | CHECKED BY: W. LAMMER |
| US 5 CROSS SECTIONS | SHEET 163 OF 166 |

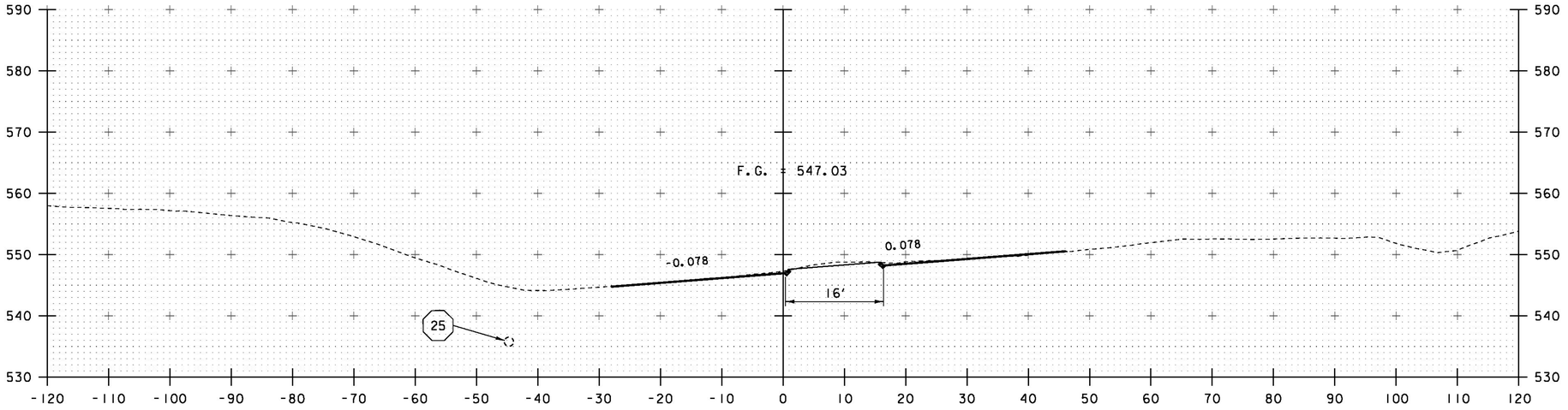


356+50

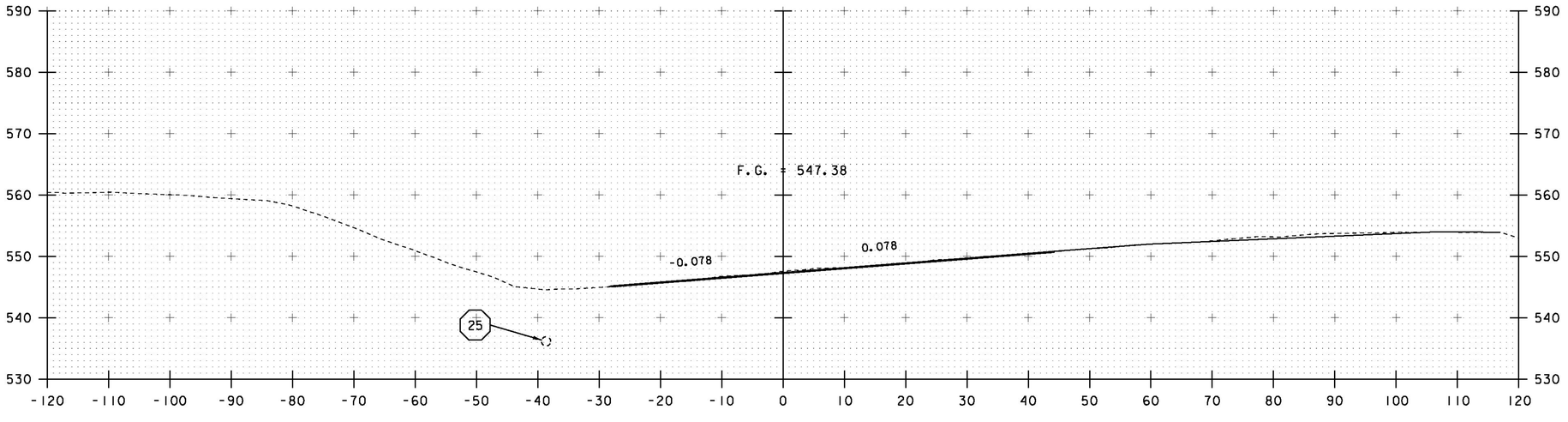


356+00

STA. 356+00 TO STA. 356+50

PROJECT NAME: HARTFORD
PROJECT NUMBER: IM 091-2(79)

FILE NAME: s12a132xsec.dgn
PROJECT LEADER: K. HIGGINS
DESIGNED BY: G. LAROCHE
US 5 CROSS SECTIONS

PLOT DATE: 15-DEC-2014
DRAWN BY: K. FRIEDLAND
CHECKED BY: W. LAMMER
SHEET 164 OF 166

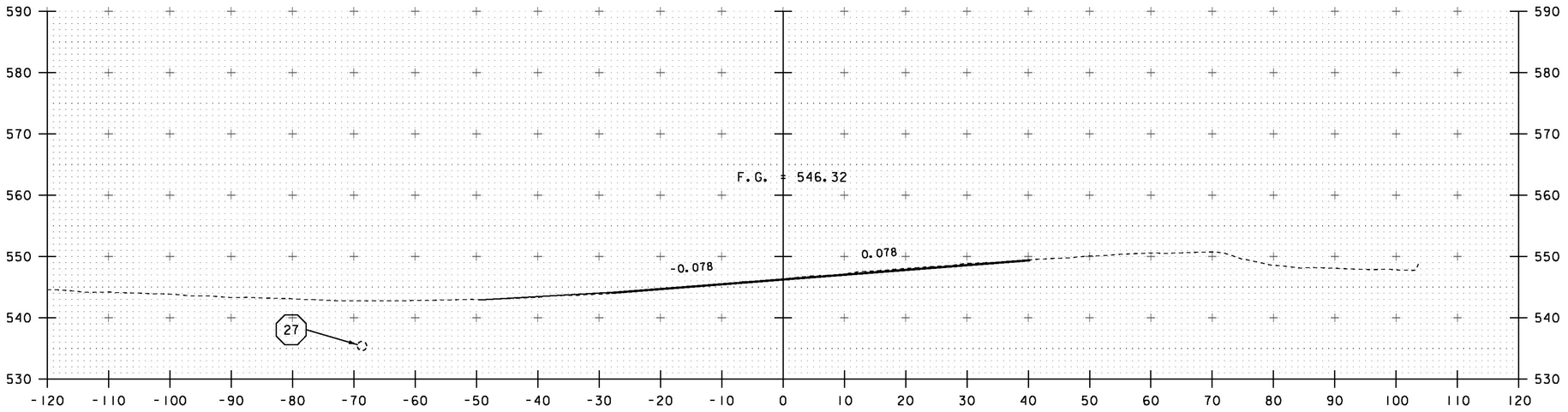


357+50

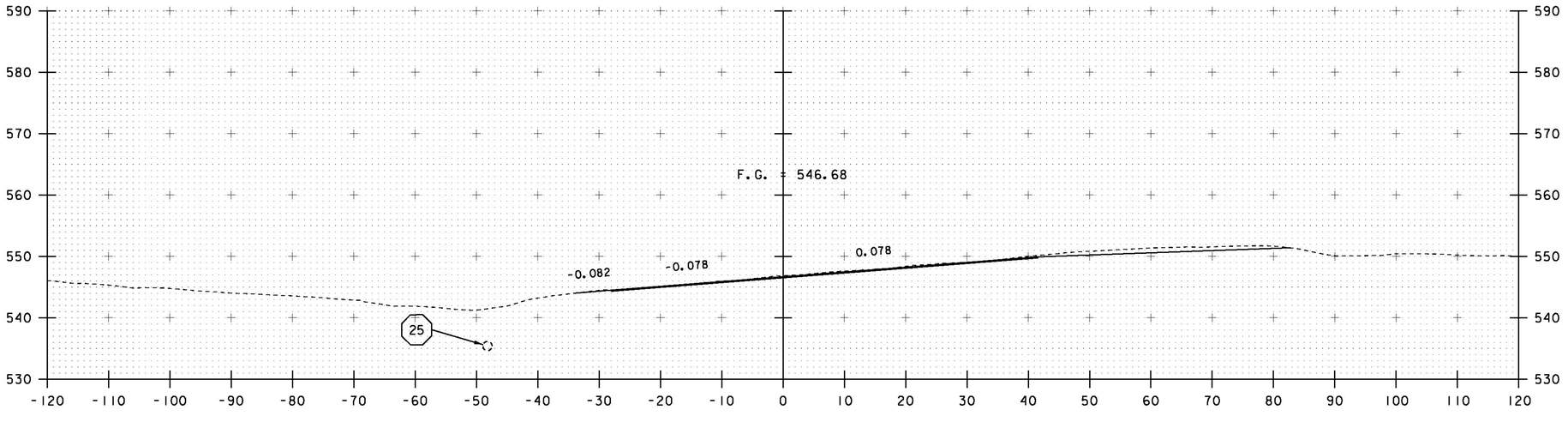


357+00

STA. 357+00 TO STA. 357+50

| | |
|---|---|
| PROJECT NAME: | HARTFORD |
| PROJECT NUMBER: | IM 091-2(79) |
| FILE NAME: sl2al32xsec.dgn | PLOT DATE: 15-DEC-2014 |
| PROJECT LEADER: K. HIGGINS | DRAWN BY: K. FRIEDLAND |
| DESIGNED BY: G. LAROCHE | CHECKED BY: W. LAMMER |
| US 5 CROSS SECTIONS | SHEET 165 OF 166 |

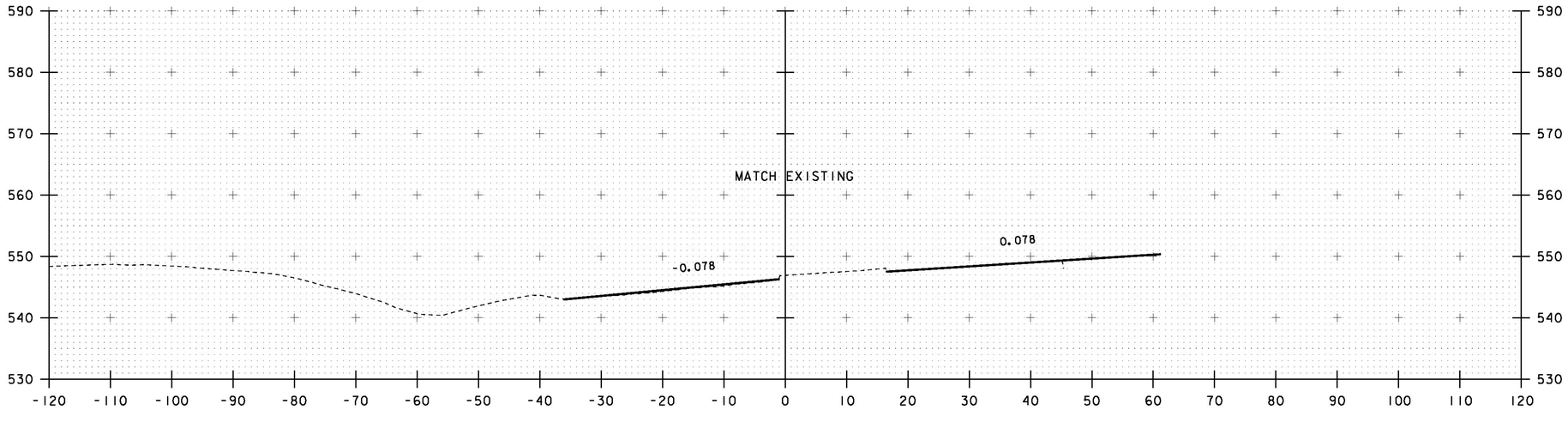


358+00

STA. 358+00 TO STA. 358+00

PROJECT NAME: HARTFORD
PROJECT NUMBER: IM 091-2(79)

FILE NAME: s12a132xsec.dgn
PROJECT LEADER: K. HIGGINS
DESIGNED BY: G. LAROCHE
US 5 CROSS SECTIONS

PLOT DATE: 15-DEC-2014
DRAWN BY: K. FRIEDLAND
CHECKED BY: W. LAMMER
SHEET 166 OF 166

## CONCRETE GENERAL NOTES

1. ALL EXPOSED EDGES OF CONCRETE SHALL BE CHAMFERED 1" x 1"
2. REINFORCING STEEL SIZE AND SPACING SHOWN IN THE PLANS IS BASED ON 60 KSI STEEL, UNLESS NOTED OTHERWISE. WITH THE ENGINEER'S PERMISSION, BAR SIZE AND SPACING MAY BE MODIFIED ACCORDING TO THE LATEST AASHTO LRFD BRIDGE DESIGN SPECIFICATION AND STRUCTURES DESIGN MANUAL WHEN USING HIGHER STRENGTH STEEL.

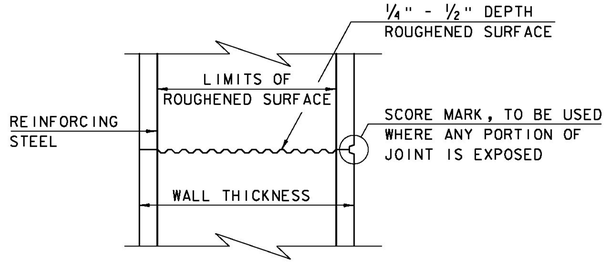


### TYPICAL HORIZONTAL CONSTRUCTION JOINT
(NOT TO SCALE)

1. THE SURFACE OF THE CONCRETE CONSTRUCTION JOINTS SHALL BE CLEANED AND FREE OF LAITANCE.
2. IMMEDIATELY BEFORE NEW CONCRETE IS PLACED, ALL CONSTRUCTION JOINTS SHALL BE WETTED AND STANDING WATER REMOVED.

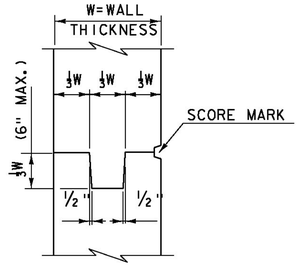


### TYPICAL CONCRETE CONSTRUCTION JOINT
(NOT TO SCALE)

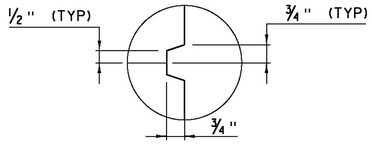


### SCORE MARK DETAIL
(NOT TO SCALE)

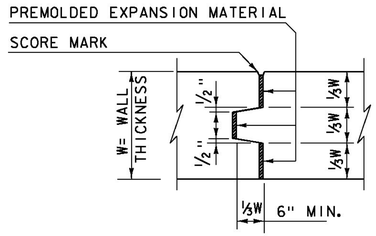


### TYPICAL CONCRETE EXPANSION JOINT
(NOT TO SCALE)

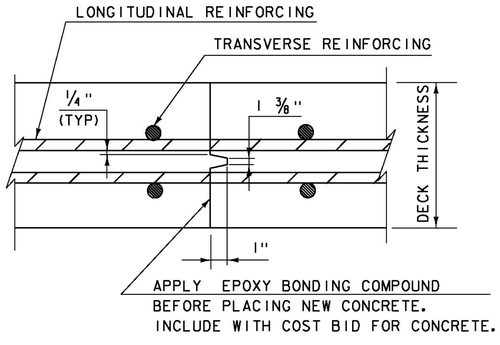


### TRANSVERSE BRIDGE SLAB CONSTRUCTION JOINT DETAILS
(NOT TO SCALE)

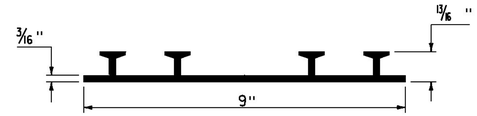


### P.V.C. WATERSTOP FOR CONSTRUCTION JOINTS
(NOT TO SCALE)

PAYMENT FOR THE P.V.C. WATERSTOP SHALL BE INCIDENTAL TO THE UNIT BID PRICE FOR THE ADJACENT CONCRETE.

OTHER CONFIGURATIONS OF WATERSTOP MAY BE USED UPON APPROVAL OF THE ENGINEER.

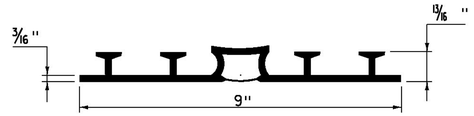


### P.V.C. WATERSTOP FOR EXPANSION JOINTS
(NOT TO SCALE)

PAYMENT FOR THE P.V.C. WATERSTOP SHALL BE INCIDENTAL TO THE UNIT BID PRICE FOR THE ADJACENT CONCRETE.

OTHER CONFIGURATIONS OF WATERSTOP MAY BE USED UPON APPROVAL OF THE ENGINEER.

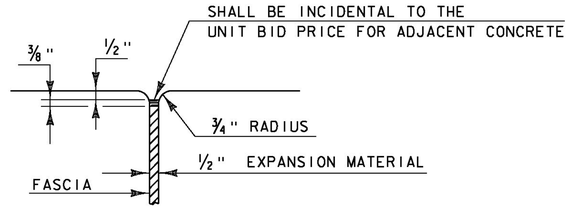


### JOINT BETWEEN FASCIA AND WINGWALL
(NOT TO SCALE)

| REVISIONS | |
|---|---|
| MAY 7, 2010 | APPROVED FOR USE BY VAOT STRUCTURES SECTION |
| FEBRUARY 9, 2012 | REBAR SUBSTITUTION ALLOWANCE ADDED TO CONCRETE GENERAL NOTES. |
| | |
| | |
| | |
| | |
| | |
| | |

# CONCRETE DETAILS AND NOTES

VERMONT AGENCY OF TRANSPORTATION
STRUCTURES - SECTION

STRUCTURES DETAIL
SD-501.00

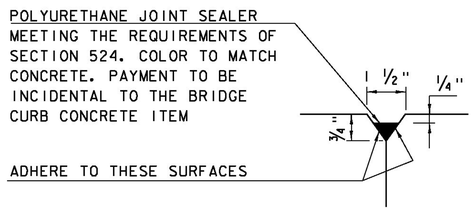


DETAIL "B"
(NOT TO SCALE)

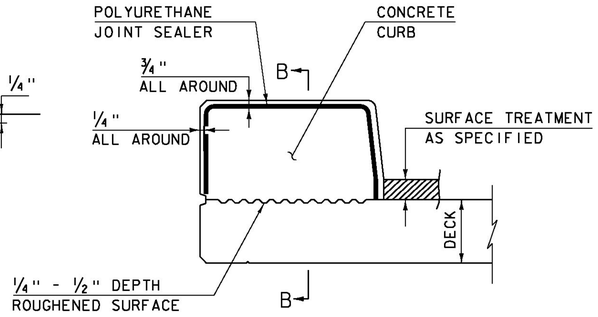


CONCRETE CURB JOINT SECTION
(NOT TO SCALE)

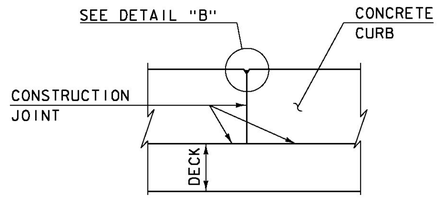


SECTION B - B
(NOT TO SCALE)

1. SEE TYPICAL HORIZONTAL CONSTRUCTION JOINT DETAIL FOR ADDITIONAL INFORMATION

## CONCRETE CURB JOINT NOTES

1. CONCRETE CURBS MAY BE PLACED IN ONE CONTINUOUS OPERATION IF AN APPROVED SHRINKAGE REDUCING ADMIXTURE LISTED IN THE SPECIAL PROVISIONS IS USED WITH THE CONCRETE MIX DESIGN. PAYMENT FOR THE SHRINKAGE REDUCING ADMIXTURE WILL BE INCIDENTAL TO THE BRIDGE CURB CONCRETE ITEM.

2. IF THE CONTRACTOR CHOOSES NOT TO USE AN APPROVED SHRINKAGE REDUCING ADMIXTURE, THE CURBS SHALL BE CONSTRUCTED WITH CONSTRUCTION JOINTS SPACED AT A MAXIMUM OF 15'-0" CENTER TO CENTER AND 2'-0" MINIMUM FROM THE CENTER OF NEAREST BRIDGE RAILING POST.

3. ON MULTI-SPAN CONTINUOUS SUPERSTRUCTURES, REGARDLESS OF WHETHER APPROVED SHRINKAGE REDUCING ADMIXTURE IS USED, CURB JOINTS SHALL BE LOCATED OVER THE CENTERLINE OF PIERS AND 7'-0" EACH SIDE OF THE CENTERLINE OF EACH PIER.

4. WHEN CURB JOINTS ARE USED THE CURBS SHALL BE PLACED IN ALTERNATE SECTIONS WITH A MINIMUM OF 48 HOUR DELAY BETWEEN ADJACENT PLACEMENTS.

5. LONGITUDINAL REINFORCING SHALL BE CONTINUOUS THROUGH CURB CONSTRUCTION JOINTS. CURB STIRRUP BARS SHALL BE TURNED AS NECESSARY TO MAINTAIN COVER IN THE FLARED CURB ENDS.

6. THE JOINT SPACING AND DETAILS SHOWN SHALL APPLY TO SIDEWALKS WHEN SHOWN IN THE PLANS.

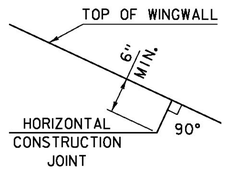


HORIZONTAL WINGWALL CONSTRUCTION JOINT
(NOT TO SCALE)

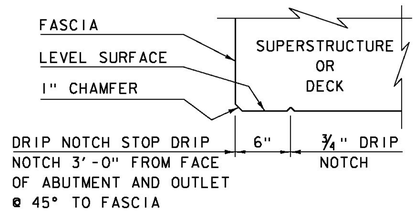


DRIP NOTCH DETAIL
(NOT TO SCALE)

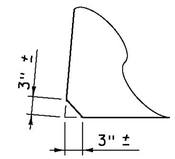


ACUTE ANGLE CLIP DETAIL
(NOT TO SCALE)

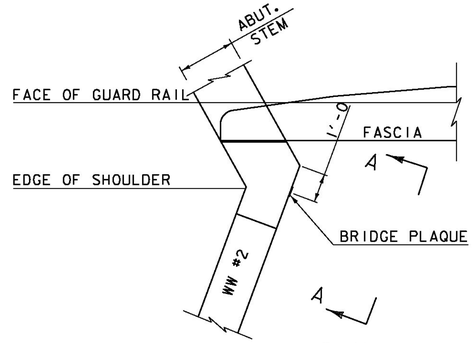


PLAN

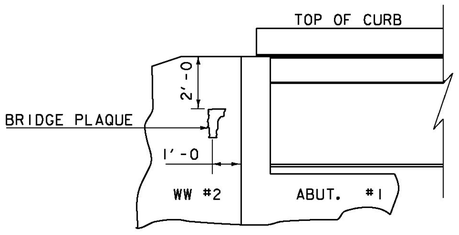


VIEW "A - A"

BRIDGE PLAQUE
(NOT TO SCALE)

THE BRIDGE PLAQUE WILL BE SUPPLIED BY THE AGENCY OF TRANSPORTATION AND SHALL BE INSTALLED BY THE CONTRACTOR AT ABUTMENT #1 ON THE RIGHT SIDE AS SHOWN OR AS DIRECTED BY THE ENGINEER.

PAYMENT FOR INSTALLATION OF THE BRIDGE PLAQUE SHALL BE INCIDENTAL TO THE ADJACENT CONCRETE.

| REVISIONS | |
|---|---|
| MAY 7, 2010 | APPROVED FOR USE BY VAOT STRUCTURES SECTION |
| JUNE 4, 2010 | MODIFIED AND ADDED TWO DETAILS |
| OCTOBER 10, 2012 | MODIFIED HORZ. JOINT WINGWALL ADD 6" MIN. DIMENSION |
| | |
| | |
| | |
| | |
| | |

# CONCRETE DETAILS AND NOTES

VERMONT AGENCY OF TRANSPORTATION
STRUCTURES - SECTION

STRUCTURES DETAIL
SD-502.00

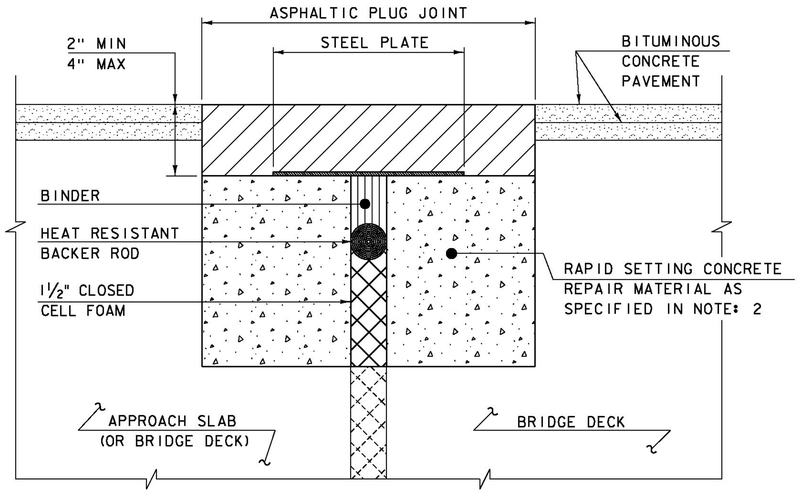


## ASPHALTIC PLUG JOINT DETAIL - REHAB

NOTES:

1. THE CONTRACTOR SHALL REMOVE ALL ASPHALTIC PLUG JOINT MATERIAL AND DETERIORATED CONCRETE AS DIRECTED BY THE ENGINEER. REMOVAL OF THE FIRST 4 INCHES OF MATERIAL SHALL BE INCLUDED IN THE BID PRICE FOR ITEM 516.10 BRIDGE EXPANSION JOINT, ASPHALTIC PLUG. ANY REMOVAL OF MATERIAL GREATER THAN 4 INCHES SHALL BE INCLUDED IN THE BID PRICE OF ITEM 580.20 RAPID SETTING CONCRETE REPAIR MATERIAL WITH COARSE AGGREGATE.

2. THE CONTRACTOR SHALL REPLACE REMOVED MATERIAL THAT IS LESS THAN 4" FROM FINISHED GRADE WITH ASPHALTIC PLUG JOINT MATERIAL MEETING THE REQUIREMENTS OF SUBSECTION 707.15. ALL REMOVED MATERIAL THAT IS GREATER THAN 4 INCHES FROM FINISHED GRADE SHALL BE REPLACED WITH RAPID SETTING CONCRETE REPAIR MATERIAL WITH COARSE AGGREGATE MEETING THE REQUIREMENTS OF SUBSECTION 780.04.

3. REINFORCING STEEL NOT SHOWN FOR CLARITY.

4. PLACE 1/4" THICK BY 8" WIDE SECTIONS OF STEEL PLATE OVER THE CENTER OF THE MOVEMENT GAP. SECURE THE PLATES FROM MOVING BY INSERTING LOCATING PINS THROUGH THE PRE-STAMPED HOLES INTO BACKER ROD AND COVER WITH HOT BINDER. THE STEEL PLATES MAY BE OMITTED WHERE THE ENGINEER DETERMINES THAT THE APPROACH SLAB OR BRIDGE DECK WILL PROVIDE INADEQUATE SUPPORT AND WHERE VERTICAL MOVEMENT OF THE PLATES MIGHT OCCUR.

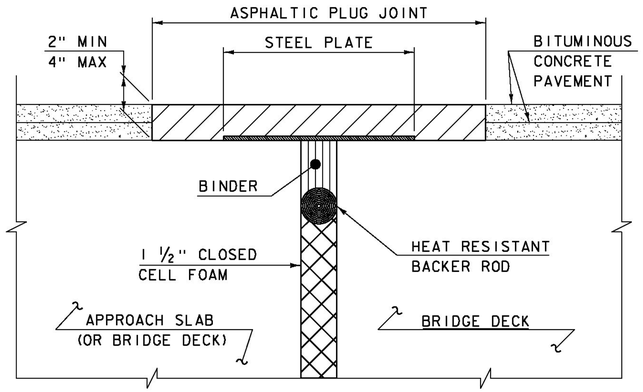


## ASPHALTIC PLUG JOINT DETAIL "A" - NEW

NOTE:
PLACE 1/4" THICK BY 8" WIDE SECTIONS OF STEEL PLATE OVER THE CENTER OF THE MOVEMENT GAP. SECURE THE PLATES FROM MOVING BY INSERTING LOCATING PINS THROUGH THE PRE-STAMPED HOLES INTO BACKER ROD AND COVER WITH HOT BINDER.

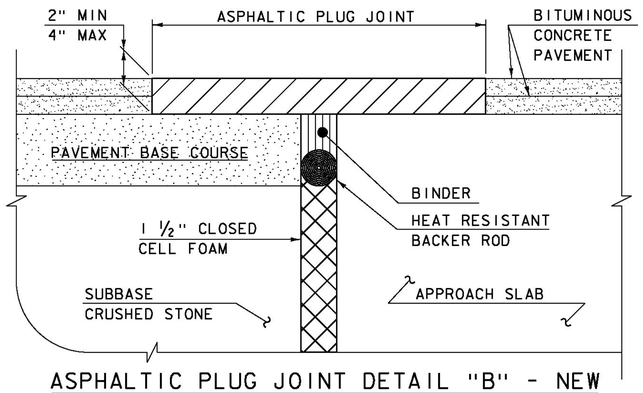


## ASPHALTIC PLUG JOINT DETAIL "B" - NEW

## ASPHALTIC PLUG JOINT NOTES

INSTALLATION:

1. LOCATE THE JOINT CENTRALLY OVER THE DECK OVERLAY EXPANSION GAP OR FIXED JOINT, MARKED OUT TO THE MANUFACTURER'S RECOMMENDED WIDTH.
2. REMOVE THE BITUMINOUS CONCRETE PAVEMENT FULL DEPTH AS SHOWN ON THE PLANS. THE PAVEMENT SHALL BE DRY AND SAW CUT TO THE LIMITS REQUIRED TO PLACE THE JOINT. A PNEUMATIC HAMMER AND CHISEL MAY BE USED ADJACENT TO THE CURB ONLY WHEN SAW CUTTING IS NOT POSSIBLE.
3. BLAST CLEAN THE JOINT AREA OF DEBRIS, ASPHALT AND SHEET MEMBRANE. THOROUGHLY DRY THE JOINT AREA WITH COMPRESSED AIR PRIOR TO APPLYING BINDER MATERIAL.
4. PLACE PROPERLY SIZED HEAT RESISTANT BACKER ROD IN THE MOVEMENT GAP ALLOWING FOR 1" +/- OF BINDER ABOVE THE ROD.
5. HEAT AND PLACE THE BINDER MATERIAL AS RECOMMENDED BY THE MANUFACTURER.
6. IMMEDIATELY AFTER TOP COATING, CAST AN ANTI-SKID MATERIAL OVER THE JOINT TO REDUCE THE RISK OF TRACKING.

WEATHER LIMITATIONS

APPLY BINDER MATERIAL ONLY WHEN THE FOLLOWING CONDITIONS PREVAIL OR AS RECOMMENDED BY THE MANUFACTURER:

1. THE AMBIENT AIR TEMPERATURE IS AT LEAST 10 DEG C (50 DEG F) AND RISING.
2. THE ROAD SURFACE IS DRY.
3. WEATHER CONDITIONS OR OTHER CONDITIONS ARE FAVORABLE AND ARE EXPECTED TO REMAIN SO FOR THE PERFORMANCE OF SATISFACTORY WORK.

DETAILS ON THIS SHEET ARE NOT TO SCALE.

| REVISIONS | |
|---|---|
| MAY 7, 2010 | APPROVED FOR USE BY VAOT STRUCTURES SECTION |
| AUGUST 29, 2011 | ADD DETAIL "B" AND REV. NOTES |
| | |
| | |
| | |
| | |
| | |
| | |

# BRIDGE JOINT
# ASPHALTIC PLUG

VERMONT AGENCY OF TRANSPORTATION
STRUCTURES - DIVISION

# STRUCTURES DETAIL
# SD-516.10

STRUCTURAL STEEL GENERAL NOTES:

1. ALL FIELD CONNECTIONS SHALL BE MADE WITH 7/8" DIAMETER HIGH-STRENGTH BOLTS IN 15/16" DIAMETER HOLES, PER SUBSECTION 506.19, UNLESS OTHERWISE SPECIFIED.
2. ALL HOLES IN THE WEBS OF THE FASCIA GIRDERS THAT ARE NOT OTHERWISE FILLED, SHALL BE FILLED WITH EITHER BUTTON HEAD OR HEX HEAD BOLTS. THESE BOLTS SHALL BE TIGHTENED IN ACCORDANCE WITH SUBSECTION 506.19.
3. ALL WELDING SHALL CONFORM TO THE PROVISIONS OF SUBSECTION 506.10.
4. ANY CONNECTIONS THAT ARE NOT DETAILED ON THE PLANS SHALL BE DETAILED BY THE FABRICATOR AND SUBMITTED TO THE STRUCTURES ENGINEER FOR APPROVAL.
5. STRUCTURAL STEEL MEMBERS DESIGNATED "CVN" IN THE PLANS SHALL BE CHARPY V-NOTCH TESTED IN ACCORDANCE WITH SUBSECTION 714.01 OF THE STANDARD SPECIFICATIONS.
6. ENDS OF GIRDERS ARE TO BE VERTICAL IN THEIR FINAL POSITION.
7. AFTER SUPERSTRUCTURE STEEL HAS BEEN ERECTED, ELEVATIONS ALONG THE TOP OF THE GIRDERS SHALL BE TAKEN AS DIRECTED BY THE RESIDENT ENGINEER FOR USE IN DETERMINING FINISHED GRADES.

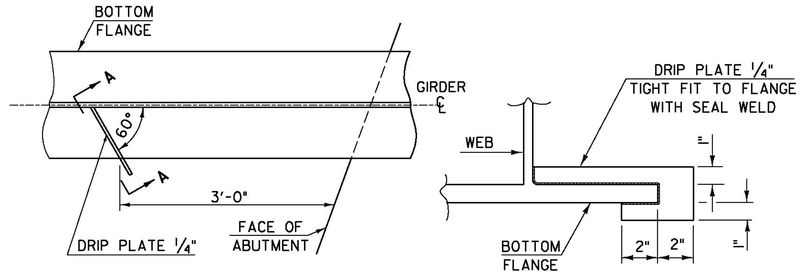


PLAN DRIP PLATE

SECTION A - A

NOTE: DRIP PLATES SHALL BE PLACED ON OUTSIDE EDGE OF FASCIA GIRDERS ON THE HIGH SIDE OF ALL PIERS AND ABUTMENTS OR AS INDICATED ON PROJECT PLANS.

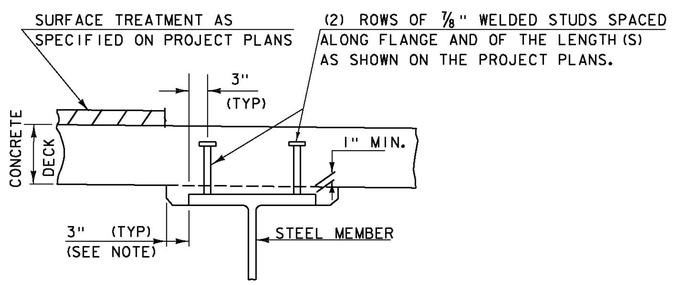


NOTE:
THE 3" HORIZONTAL SECTION MAY BE ELIMINATED FOR FORMING SYSTEMS DESIGNED FOR THE CONSTRUCTION OF VERTICAL HAUNCHES. ANY VOIDS RESULTING FROM FORMING SYSTEM ELEMENTS SHALL BE FILLED WITH JOINT SEALER, POLYURETHANE MEETING THE REQUIREMENTS OF SECTION 524. THE COST OF THE JOINT SEALER, POLYURETHANE SHALL BE INCIDENTAL TO THE ADJACENT CONCRETE.

HAUNCH AND SHEAR CONNECTOR DETAIL

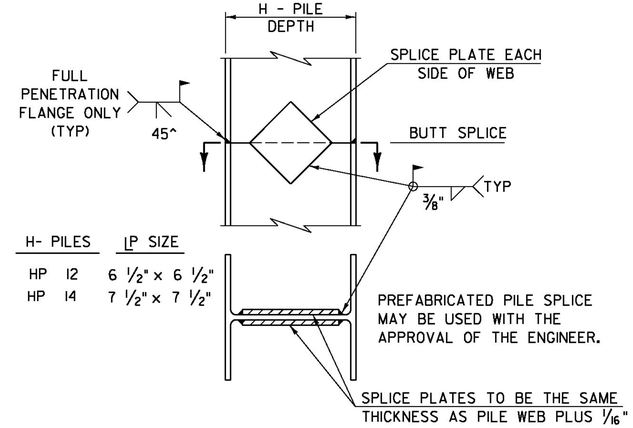


DETAIL OF PILE SPLICE

DETAILS ON THIS SHEET ARE "NOT TO SCALE" UNLESS NOTED OTHERWISE.

| REVISIONS | |
|---|---|
| MAY 7, 2010 | APPROVED FOR USE BY VAOT STRUCTURES SECTION |
| JUNE 4, 2010 | MODIFIED NOTES |
| | |
| | |
| | |
| | |
| | |
| | |

# STRUCTURAL STEEL DETAILS & NOTES

VERMONT AGENCY OF TRANSPORTATION
STRUCTURES - SECTION

STRUCTURES DETAIL
SD-601.00

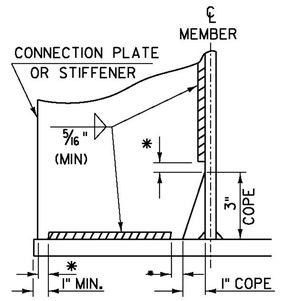


## WELD TERMINATION AND COPING DETAILS FOR STEEL MEMBERS

*NO WELD FOR 3/8" MIN. 7/8" MAX. (EXCEPT MUST MAINTAIN 1" MINIMUM FROM EDGE OF FLANGE)

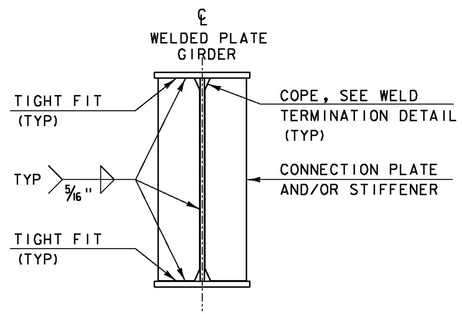


## INTERMEDIATE CONNECTION PLATES AND/OR STIFFENERS FOR WELDED PLATE GIRDERS

INTERMEDIATE DETAIL IS ONLY USED WHEN PLATE DOES NOT OCCUR AT AN ABUTMENT OR PIER.

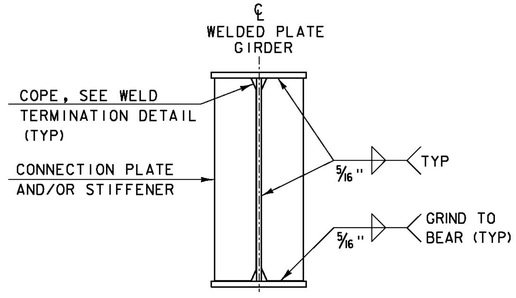


## ABUTMENT BEARING STIFFENERS AND/OR CONNECTION PLATES FOR WELDED PLATE GIRDERS

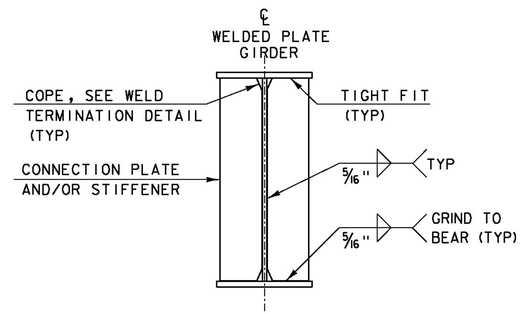


## PIER BEARING STIFFENERS AND/OR CONNECTION PLATES FOR WELDED PLATE GIRDERS

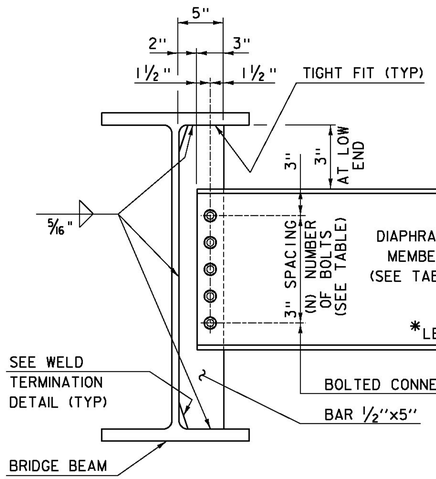


| DEPTH | | DIAPHRAGM MEMBER | (N) BOLTS |
|---|---|---|---|
| ROLLED BEAM | 24" 30" | C15x33.9 | 4 |
| | 31" 36" | MC18x42.7 | 5 |
| | 37" 42" | W21x44 | 6 |
| PLATE GIRDER WEB | 31" 36" | W27x84 | 7 |
| | 37" 42" | W33x118 | 9 |
| | 43" 48" | W36x135 | 10 |

## INTERMEDIATE DIAPHRAGMS FOR 24" TO 48" BRIDGE BEAMS

* IF CLEARANCE CANNOT BE MET, DIAPHRAGM MAY BE SLOPED.

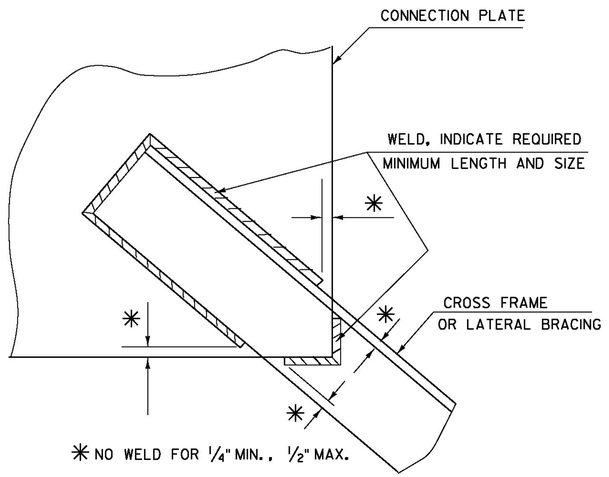


## WELD LOCATION DETAIL AT CROSS FRAMES AND LATERAL BRACING

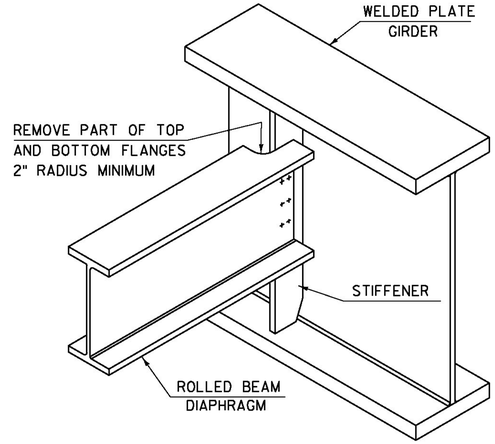


SEE CONTRACT DRAWINGS FOR SIZES OF MEMBERS AND CONNECTION DETAILS

## ROLLED BEAM USED AS DIAPHRAGM

DETAILS ON THIS SHEET ARE "NOT TO SCALE" UNLESS NOTED OTHERWISE.

| REVISIONS | |
|---|---|
| MAY 7, 2010 | APPROVED FOR USE BY VAOT STRUCTURES SECTION |
| MAY 2, 2011 | ADD INTERMEDIATE DIAPHRAGMS DETAIL & ADD NOT TO SCALE NOTE |
| | |
| | |
| | |
| | |
| | |
| | |

# STRUCTURAL STEEL PLATE GIRDER DETAILS AND NOTES

VERMONT AGENCY OF TRANSPORTATION
STRUCTURES - SECTION

STRUCTURES DETAIL
SD-602.00

*Seismic Energy Products, L.P.*
518 Progress Way
Athens, TX 75751
Phone: (903)675-8571
Fax: (903)675-8983

# Welding Procedure Specification

**Material Specification:** *ASTM 709, Grade A36*

**Welding Process:** *FCAW*

**Manual, Semiautomatic, or Automatic:** *SEMI-AUTO*

**Position of Welding:** *1F*

**Filler Metal Specification:** *AWS A5.29*

**Filler Metal Classification:** *E81T1-Ni1CJ-H4*

**Flux:** *N/A*

**Electrode and Manufacturer:** *81 NiC-H LINCOLN*

**Shielding Gas:** *100% Co2* ***Dew Point:*** *-128°F* ***Flow Rate:*** *40cfm*

**Single or Multiple Pass:** *Single*

**Single or Multiple Arc:** *Single*

**Welding Current:** *DC*

**Polarity:** *DCEP*

**Welding Progression:** *Left to Right*

**Root Treatment:** *Wire Brush*

**Preheat and Interpass Temperature:** *70° and 450° MAX.*

**Postheat Treatment:** *None*

Vermont Agency of Transportation
RECEIVED
CK'D BY ____ OK'D BY JC
February 13, 2015
RESUBMIT NO Approved
BY KH DATE 3-5-2015

## WELDING PROCEDURE

| Pass No | Electrode Size | Welding Parameters | | Travel Speed | Joint Detail |
|---|---|---|---|---|---|
| | | Amperes | Volts | | |
| *All* | *0.0625* | *300-325* | *27-30* | *12 IPM* | 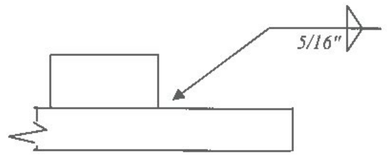 |



**Procedure File#:** TP4 **Contractor:** *Seismic Energy Products, L.P.*

**Revision:** WPS # NY-01 **Date:** 2/12/2015

SO. 61614

BD 1778(12/80)

**NEW YORK STATE**

**DEPARTMENT OF TRANSPORTATION ~**

**WELDING PROCEDURE QUALIFICATION RECORD**

Fabricator Seismic Energy Products Test Date 4/14/10

Process FCAW Filler Metal Classification E81T1-Ni1C

Electrode(s) Lincoln Ultracore 81Ni1C Flux N/A

(1) Diameter 1/16" Amps 310 Volts 33 Current & Polarity DC-Rev

(2) ____ ____ ____ ____

(3) ____ ____ ____ ____

Shielding Gas 100% $CO_2$ Flow Rate 40 CFH Dew Point -128°F

Travel Speed 12 I.P.M. Material Specification & Thickness A588 - 1"

Preheat Temp. 200°F Interpass Temp. 450°F max.

Heat Input 51,150 FCM ☐ Yes ☒ No

| SPECIMEN | TEST RESULTS | | |
|---|---|---|---|
| All Weld Metal Tension (AWMT) | | (1) | (2) |
| | Tensile Strength (psi) | 85,400 | |
| | Yield Strength (psi) | 77,500 | |
| | Elongation in 2" (%) | 28 | |
| | Reduction in Area (%) | | |
| Side Bends | 1. Pass 2. Pass 3. Pass 4. Pass | | |
| Reduction Section Tension | Tensile Strength 1. 85,000 2. 86,300 | Location of Break 1. BM 2. BM | |
| Charpy Impact (Weld Metal) | (57, 48, 17, 26, 27) | Avg. Ft. Lbs. 33.7 @ -20 °F | |
| | (____, ____, ____, ____, ____) | Avg. Ft. Lbs. ____ @ ____ °F | |
| | ESW & EGW (____, ____, ____, ____, ____, ____, ____, ____) | Avg. Ft. Lbs. ____ @ ____ °F | |
| Chemistry | C. .06 Mn. 1.03 P. .01 S. .004 Si. .22 | | |
| | Ni .90 Cr. .08 Mo. .007 V. .02 Cu. .06 | | |

REMARKS:

PQR# TP4

Position - 1G

NYSDOT
METALS ENGINEERING
REVIEW

X APPROVED Expires 4/14/15
___ APPROVED AS NOTED
___ DISAPPROVED
5/5/10
R. Cosgrove

Vermont Agency of Transportation
RECEIVED
CK'D BY ____ OK'D BY JC
February 13, 2015
RESUBMIT NO Approved
BY KH DATE 3-5-2015

Test Witness: John Martin Agency NDT

Results Reviewed: RMC DOT Acceptance R. Cosgrove Date 5/5/10

**Seismic Energy Products**
518 Progress Way
Athens, Texas 75751

## Welder or Welding Operator Qualification Test Record (WPQR)

Welder's Name: **Whitley, Jeremy** Stamp: **7442**
Test WPS No.: **SEP.312, .375, .500** Rev.: **0** WPQ No.: **7442** Date: **6/20/2011** Page 1
Type of joint welded: Plate Fillet weld
Joint type(s) qualified: All applicable fillet welds (except T-, Y- & K-connection fillet welds)
Base metal(s) welded: ASTM 709 Grade 50W (A588) to ASTM 709 Grade 50W (A588)

| Variables (Table 4.12) | Actual Values Used | Range Qualified |
|---|---|---|
| Welding process / type | FCAW / Semiautomatic | FCAW / Semiautomatic, Machine, and Automatic |
| Base metal thickness - groove (in.) | N/A | N/A |
| Base metal thickness - fillet (in.) | 1/2" | 1/8" to unlimited |
| Pipe diameter - groove (in.) | N/A | N/A |
| Pipe diameter - fillet (in.) | N/A | All diameters |
| Box tube size (in.) | N/A | All sizes |
| Dihedral angle - fillet | 90 | 60° to 135° |
| Backing | Backing used | With backing only |
| Filler metal classification | E81T1-Ni1 | |
| Filler metal specification | 5.29 | |
| Filler metal F-No. | 6 | N/A |
| Welding position - groove | N/A | N/A |
| Welding position - fillet | 2F - Horizontal | Flat & Horizontal |
| Weld progression | N/A | N/A |
| Shielding gas | 100% CO2 | |
| Welding current / polarity | DCEP (reverse) | |
| Transfer mode (GMAW) | N/A | N/A |
| Single / multiple electrode | N/A | N/A |

**Notes:**

Visual inspection acceptable: Yes Other test results:

**Fillet Test Results**

Appearance: Acceptable
Fracture test root penetration: Acceptable
Fillet size: 5/16"
Macroetch: Acceptable
Test No.: 7442-06-20-2011

Inspected by: Steven D. Downing 6/20/2011 CWI/CWE/CRI/ASNT Lv II
Date

We, the undersigned, certify that the statements in this record are correct and that the welds were prepared and tested in conformance with the requirements of AASHTO/AWS D1.5M/D1.5, 2010 Bridge Welding Code

Manufacturer or Contractor: Seismic Energy Products

Certified By: Date

Vermont Agency of Transportation
**RECEIVED**
CK'D BY ____ OK'D BY JC
February 13, 2015
RESUBMIT NO Approved
BY KH DATE 3-5-2015

| REVISIONS | | | |
|---|---|---|---|
| REV. | DESCRIPTION | BY | DATE |
| A | SUBMITTAL | MS | 2/10/2015 |
| B | CHANGES PER MARK-UPS DATED 2/13/15 | AL | 3/2/2015 |

## GENERAL NOTES

1. ALL BEARINGS SHALL CONFORM TO THE STATE OF VERMONT AGENCY OF TRANSPORTATION STANDARD SPECIFICATIONS, LATEST EDITION, SECTIONS 531 AND 731 AND THE CONTRACT PRINTS, UNLESS NOTED OTHERWISE.

2. MATERIALS:
   - ELASTOMER.....50 DURO NATURAL, GRADE 4 (110 ± 15 psi)
   - CARBON STEEL SHIMS.....ASTM A1011, GR. 40
   - SOLE PLATES.....ASTM A36 (AASHTO M270 GRADE 36)
   - SIDE RETAINERS.....ASTM A36 (AASHTO M270 GRADE 36) B

3. TOLERANCES:
   - LAMINATED ELASTOMERIC PADS:
     - DUROMETER.....± 5
     - OVERALL THICKNESS (VERTICAL) OVER 1 1/4".....-0, +1/4"
     - OVERALL LENGTH & WIDTH (HORIZONTAL) 36" OR LESS.....-0, +1/4"
     - THICKNESS OF INDIVIDUAL
       - LAYERS OF ELASTOMER.....±1/8"
       - PARALLELISM:
         - TOP.....0.005 rad
         - SIDES.....1/4"
     - EDGE COVER.....-0, +1/8"
     - HOLE/SLOT SIZE.....±1/8"
     - HOLE/SLOT POSITION.....±1/8"
   - PLATES:
     - OVERALL THICKNESS (VERTICAL).....0.001 X NOM.
     - OVERALL LENGTH & WIDTH (HORIZONTAL).....±1/4"
     - FLATNESS.....0.001 X NOM" B
     - BEVEL SLOPE.....±0.002 rad

4. MARKINGS:
   EACH BEARING SHALL BE PERMANENTLY MARKED IN A LOCATION THAT IS VISIBLE WHEN THE DEVICE IS INSTALLED IN THE COMPLETED STRUCTURE. MARKING SHALL BE SEP STANDARD:
   - CONTRACT/ORDER #
   - LOT#
   - BEARING ID # (MK. #)
   - LOCATION/BRIDGE #
   - ELASTOMER TYPE AND GRADE
   - ORIENTATION (WHERE APPLICABLE)

   *SEE ISOMETRIC VIEW ON THIS SHEET FOR MARKING DETAILS*

5. TESTING: PER SPECIFICATIONS CITED IN GENERAL NOTE #1.

6. PAINT/FINISH: EXTERNAL PLATES, RETAINER ANGLES AND HARDWARE HOT DIP GALVANIZED PER ASTM A123 OR ASTM A153 AS APPLICABLE.

7. SEP TO PROVIDE ONLY THE ITEMS SHOWN ON THIS DRAWING.

8. SHIPPING: BEARINGS SHALL BE PACKAGED IN SUCH A MANNER TO ENSURE THAT DURING SHIPMENT AND STORAGE THE BEARINGS WILL BE PROTECTED AGAINST DAMAGE FROM HANDLING, WEATHER OR ANY NORMAL HAZARD.

9. REPRESENTATIVE
   - CUSTOMER SERVICE: STEVE BOWMAN.....903-677-4318
   - TECHNICAL: MIKE SPELLMAN.....903-677-4342

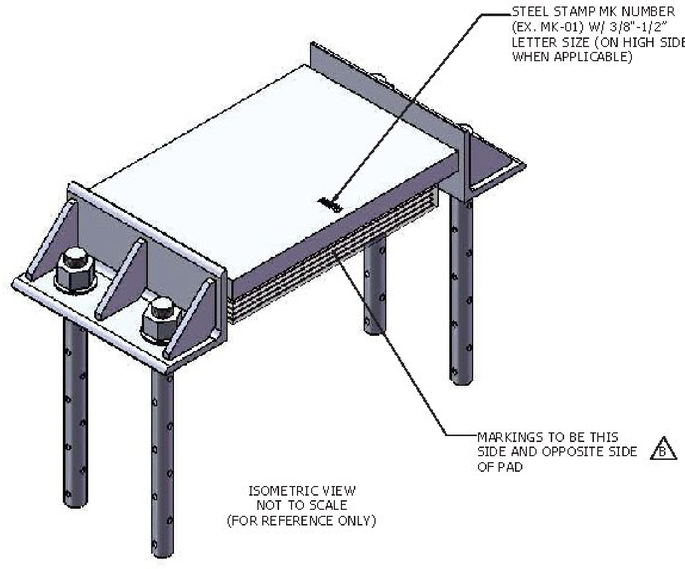


ISOMETRIC VIEW
NOT TO SCALE
(FOR REFERENCE ONLY)

Vermont Agency of Transportation
RECEIVED
CK'D BY JC/RK OK'D BY WL
March 2, 2015
RESUBMIT NO Approved
BY KH DATE 3-5-2015

ALL DIMENSIONS ARE IN INCHES UNLESS OTHERWISE SPECIFIED

NOTE

INFORMATION SET FORTH IN THIS DRAWING IS PROPRIETARY WITH Seismic Energy Products, Inc. THIS DRAWING SHALL NOT BE REPRODUCED, COPIED, LOANED OR SUBMITTED TO OUTSIDE PARTIES FOR EXAMINATION WITHOUT OUR CONSENT EXCEPT FOR THE PURPOSE FOR WHICH IT WAS INTENDED.

| | |
|---|---|
| PROJECT NO. | IM 091-2(79) |
| BRIDGE NO | 43 N/S |
| COUNTY | WINDSOR |
| TOWN | HARTFORD |

Seismic Energy Products, Inc.
STRUCTURAL BEARINGS FOR BRIDGES & BUILDINGS
ATHENS, TX PHONE: 903-675-9571

BEARING ASSY FOR:
STATE OF VERMONT AGENCY OF TRANSPORTATION

INTERSTATE 91 EXIT 11

CONTRACTOR: PCL CIVIL CONSTRUCTORS

| | | |
|---|---|---|
| DRAWN ALUTTRELL | DATE 2/9/15 | PO # EM |
| CHECKED . | DATE . | SO NO. & ST. 61614 VT |
| REVIEWED MSPELLMAN | DATE 2/10/15 | SHEET 1 OF 5 |

| REVISIONS | | | |
|---|---|---|---|
| REV. | DESCRIPTION | BY | DATE |
| A | SUBMITTAL | MS | 2/10/2015 |
| B | CHANGES PER MARK-UPS DATED 2/13/15 | AL | 3/2/2015 |

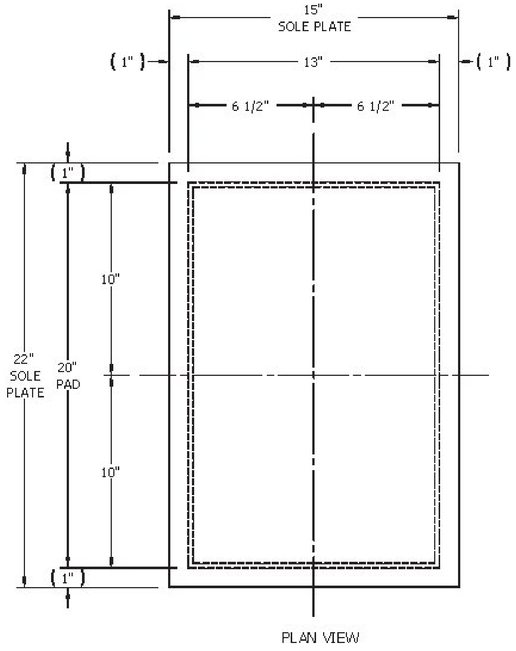


PLAN VIEW

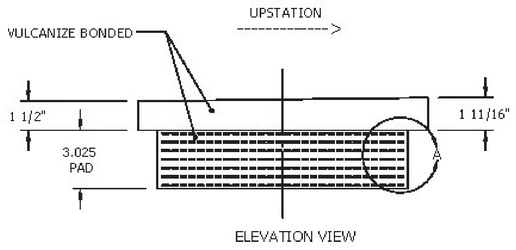


ELEVATION VIEW

**MK.01**
**BEARING PADS**
@ ABUTS 1 & 2
**(12) REQ'D**

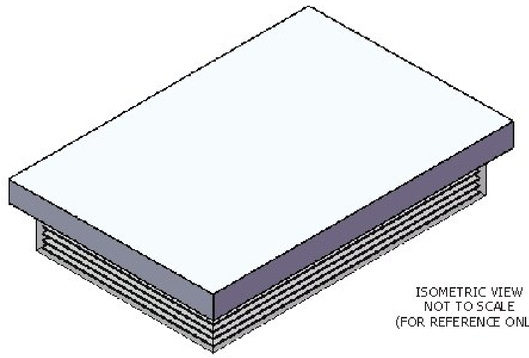

ISOMETRIC VIEW
NOT TO SCALE
(FOR REFERENCE ONLY)

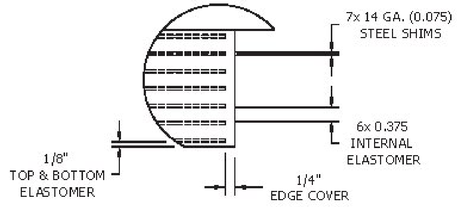


DETAIL A

Vermont Agency of Transportation
**RECEIVED**
CK'D BY JC/RK OK'D BY WL
March 2, 2015
RESUBMIT NO Approved
BY KH DATE 3-6-2015

ALL DIMENSIONS ARE IN INCHES
UNLESS OTHERWISE SPECIFIED

NOTE

INFORMATION SET FORTH IN THIS DRAWING IS PROPRIETARY WITH Seismic Energy Products, Inc. THIS DRAWING SHALL NOT BE REPRODUCED, COPIED, LOANED OR SUBMITTED TO OUTSIDE PARTIES FOR EXAMINATION WITHOUT OUR CONSENT EXCEPT FOR THE PURPOSE FOR WHICH IT WAS INTENDED.

| | |
|---|---|
| PROJECT NO. | IM 091-2(79) |
| BRIDGE NO | 43 N/S |
| COUNTY | WINDSOR |
| TOWN | HARTFORD |

**Seismic Energy Products, Inc.**
STRUCTURAL BEARINGS FOR BRIDGES & BUILDINGS
ATHENS, TX PHONE: 903-675-8571

BEARING ASSY FOR:
*STATE OF VERMONT AGENCY OF TRANSPORTATION*

INTERSTATE 91 EXIT 11

CONTRACTOR:
PCL CIVIL CONSTRUCTORS

| | | |
|---|---|---|
| DRAWN ALUTTRELL | DATE 2/9/15 | PO # EM |
| CHECKED . | DATE . | SO NO. & ST. **61614 VT** |
| REVIEWED MSPELLMAN | DATE 2/10/15 | SHEET 2 OF 5 |

| REVISIONS | | | |
|---|---|---|---|
| REV. | DESCRIPTION | BY | DATE |
| A | SUBMITTAL | MS | 2/10/2015 |
| B | CHANGES PER MARK-UPS DATED 2/13/15 | AL | 3/2/2015 |

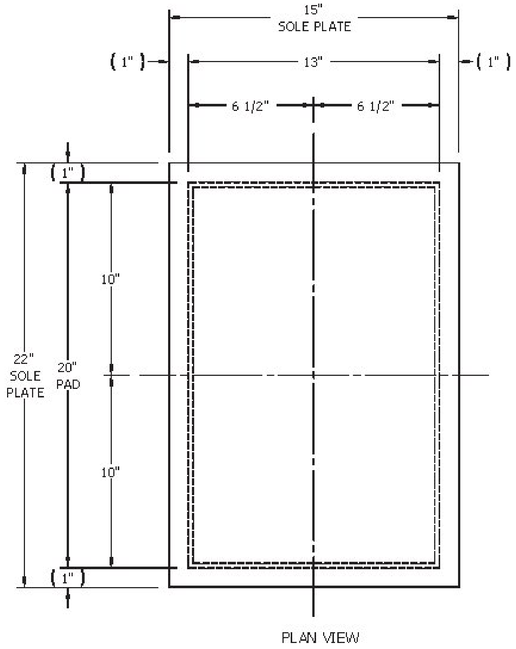


PLAN VIEW

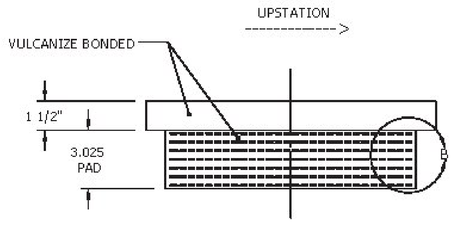


ELEVATION VIEW

MK.02
BEARING PADS
@ ABUT 3
(6) REQ'D

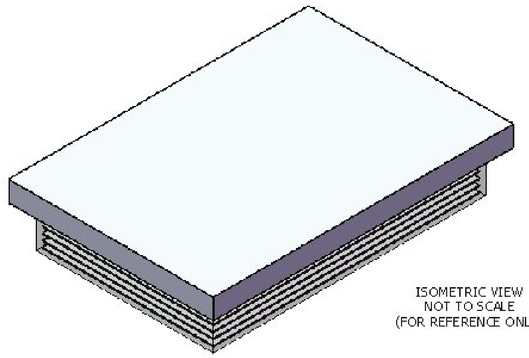

ISOMETRIC VIEW
NOT TO SCALE
(FOR REFERENCE ONLY)

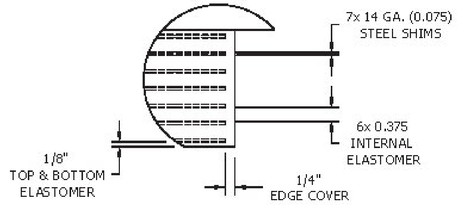


DETAIL B

Vermont Agency of Transportation
RECEIVED
CK'D BY JC/RK OK'D BY WL
March 2, 2015
RESUBMIT NO Approved
BY KH DATE 3-5-2015

ALL DIMENSIONS ARE IN INCHES
UNLESS OTHERWISE SPECIFIED

NOTE

INFORMATION SET FORTH IN THIS DRAWING IS PROPRIETARY WITH Seismic Energy Products, Inc. THIS DRAWING SHALL NOT BE REPRODUCED, COPIED, LOANED OR SUBMITTED TO OUTSIDE PARTIES FOR EXAMINATION WITHOUT OUR CONSENT EXCEPT FOR THE PURPOSE FOR WHICH IT WAS INTENDED.

| | |
|---|---|
| PROJECT NO. | IM 091-2(79) |
| BRIDGE NO | 43 N/S |
| COUNTY | WINDSOR |
| TOWN | HARTFORD |

Seismic Energy Products, Inc.
STRUCTURAL BEARINGS FOR BRIDGES & BUILDINGS
ATHENS, TX PHONE: 903-675-8571

BEARING ASSY FOR:
*STATE OF VERMONT AGENCY OF TRANSPORTATION*

INTERSTATE 91 EXIT 11

CONTRACTOR:
PCL CIVIL CONSTRUCTORS

| | | |
|---|---|---|
| DRAWN ALUTTRELL | DATE 2/9/15 | PO # EM |
| CHECKED . | DATE . | SO NO. & ST. **61614 VT** |
| REVIEWED MSPELLMAN | DATE 2/10/15 | SHEET 3 OF 5 |

| REVISIONS | | | |
|---|---|---|---|
| REV. | DESCRIPTION | BY | DATE |
| A | SUBMITTAL | MS | 2/10/2015 |
| B | CHANGES PER MARK-UPS DATED 2/13/15 | AL | 3/2/2015 |

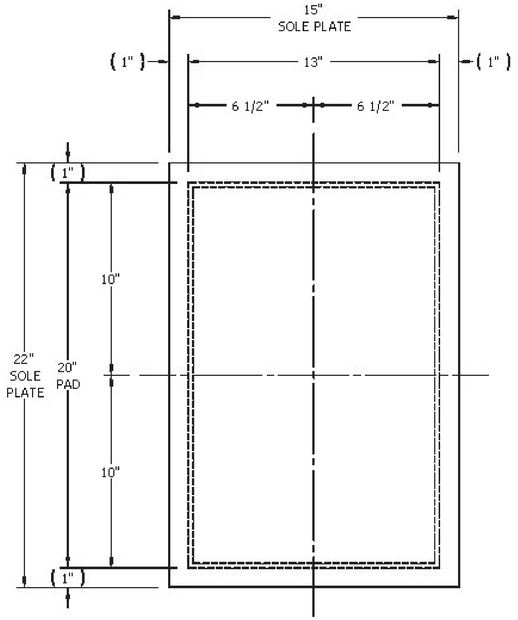


PLAN VIEW

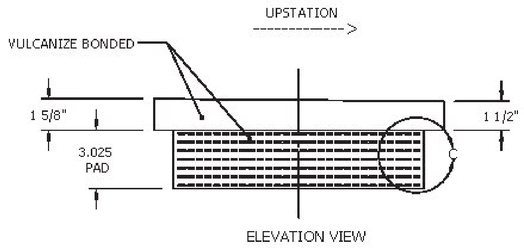


ELEVATION VIEW

**MK.03**
**BEARING PADS**
@ ABUT 4
**(6) REQ'D**

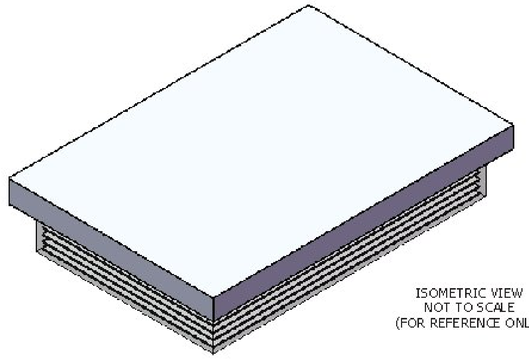

ISOMETRIC VIEW
NOT TO SCALE
(FOR REFERENCE ONLY)

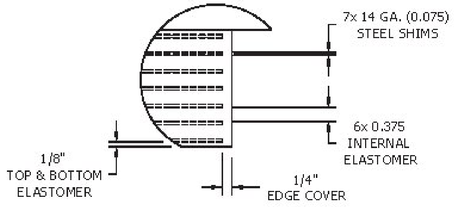


DETAIL C

Vermont Agency of Transportation
**RECEIVED**
CK'D BY JC/RK OK'D BY WL
March 2, 2015
RESUBMIT NO **Approved**
BY KH DATE 3-5-2015

ALL DIMENSIONS ARE IN INCHES
UNLESS OTHERWISE SPECIFIED

NOTE

INFORMATION SET FORTH IN THIS DRAWING IS PROPRIETARY WITH Seismic Energy Products, Inc. THIS DRAWING SHALL NOT BE REPRODUCED, COPIED, LOANED OR SUBMITTED TO OUTSIDE PARTIES FOR EXAMINATION WITHOUT OUR CONSENT EXCEPT FOR THE PURPOSE FOR WHICH IT WAS INTENDED.

| | |
|---|---|
| PROJECT NO. | IM 091-2(79) |
| BRIDGE NO. | 43 N/S |
| COUNTY | WINDSOR |
| TOWN | HARTFORD |

**Seismic Energy Products, Inc.**
STRUCTURAL BEARINGS FOR BRIDGES & BUILDINGS
ATHENS, TX PHONE: 903-675-8571

BEARING ASSY FOR:
*STATE OF VERMONT AGENCY OF TRANSPORTATION*

INTERSTATE 91 EXIT 11

CONTRACTOR:
PCL CIVIL CONSTRUCTORS

| | | |
|---|---|---|
| DRAWN ALUTTRELL | DATE 2/9/15 | PO # EM |
| CHECKED . | DATE . | SO NO. & ST. **61614 VT** |
| REVIEWED MSPELLMAN | DATE 2/10/15 | SHEET 4 OF 5 |

| REVISIONS | | | |
|---|---|---|---|
| REV. | DESCRIPTION | BY | DATE |
| A | SUBMITTAL | MS | 2/10/2015 |
| B | CHANGES PER MARK-UPS DATED 2/13/15 | AL | 3/2/2015 |

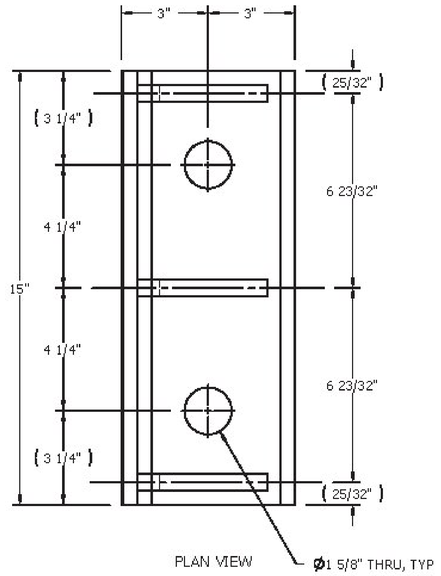


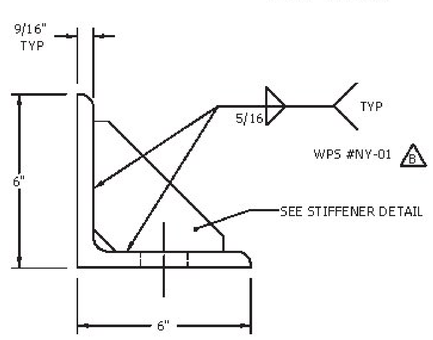


**MK.04**
**RETAINERS**
**(48) REQ'D**
(2 @ EACH BEARING)

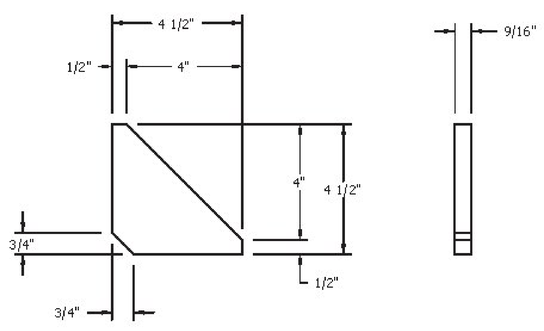


**STIFFENER**
**(144) REQ'D**
(3 @ EACH ANGLE ASSY)

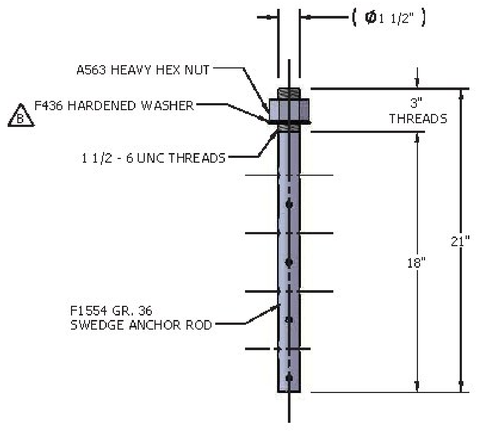


**MK.05**
**ANCHOR ROD ASSEMBLY**
**(96) REQ'D**
(4 @ EACH BEARING ASSY)

Vermont Agency of Transportation
**RECEIVED**
CK'D BY JC/RK OK'D BY WL
March 2, 2015
RESUBMIT NO Approved
BY KH DATE 3-6-2015

ALL DIMENSIONS ARE IN INCHES UNLESS OTHERWISE SPECIFIED

NOTE

INFORMATION SET FORTH IN THIS DRAWING IS PROPRIETARY WITH Seismic Energy Products, Inc. THIS DRAWING SHALL NOT BE REPRODUCED, COPIED, LOANED OR SUBMITTED TO OUTSIDE PARTIES FOR EXAMINATION WITHOUT OUR CONSENT EXCEPT FOR THE PURPOSE FOR WHICH IT WAS INTENDED.

| | |
|---|---|
| PROJECT NO. | IM 091-2(79) |
| BRIDGE NO | 43 N/S |
| COUNTY | WINDSOR |
| TOWN | HARTFORD |

Seismic Energy Products, Inc.
STRUCTURAL BEARINGS FOR BRIDGES & BUILDINGS
ATHENS, TX PHONE: 903-675-8571

BEARING ASSY FOR:
*STATE OF VERMONT AGENCY OF TRANSPORTATION*

INTERSTATE 91 EXIT 11

CONTRACTOR: PCL CIVIL CONSTRUCTORS

| | | |
|---|---|---|
| DRAWN ALUTTRELL | DATE 2/9/15 | PO # EM |
| CHECKED . | DATE . | SO NO. & ST. 61614 VT |
| REVIEWED MSPELLMAN | DATE 2/10/15 | SHEET 5 OF 5 |

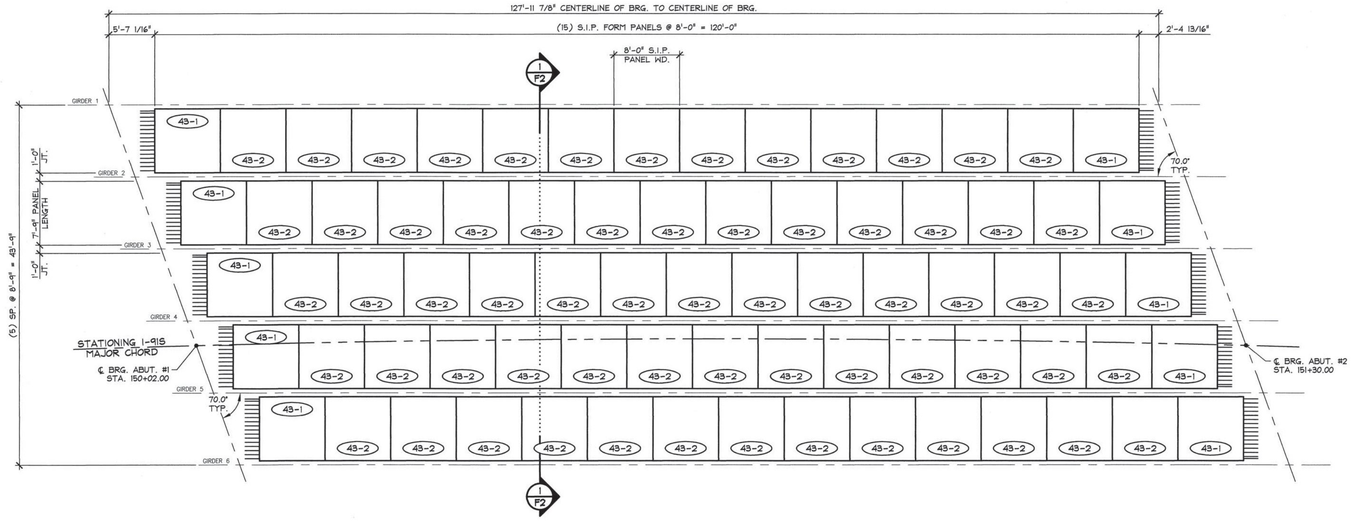


1 F1 PRESTRESSED STAY-IN-PLACE FORM PANEL LAYOUT (BRIDGE 43S)

1/8" = 1'-0"

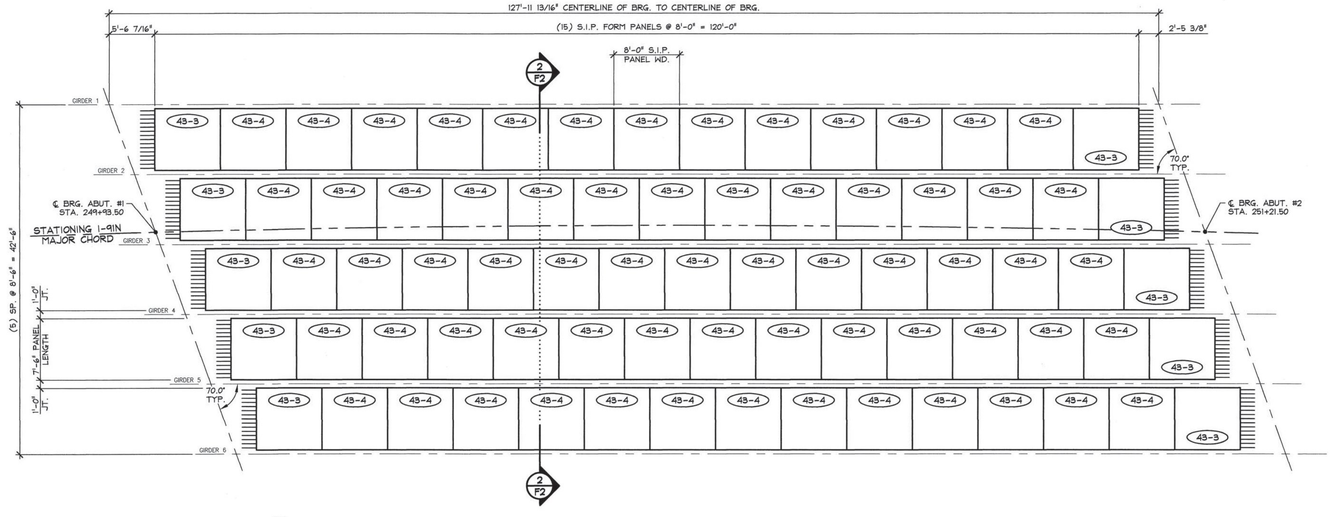


2 F1 PRESTRESSED STAY-IN-PLACE FORM PANEL LAYOUT (BRIDGE 43N)

1/8" = 1'-0"

## GENERAL NOTES

1. MIN. CONCRETE STRENGTH AT 28 DAYS SHALL BE 5,000 PSI.
2. MIN. CONCRETE STRENGTH AT STRESS TRANSFER SHALL BE 4,000 PSI.
3. REINFORCING STEEL SHALL BE ~~GR-60, ASTM A-615 (AASHTO M31)~~, AND SHALL BE STAINLESS STEEL.
4. PRESTRESSING STRANDS SHALL CONFORM TO ASTM A-416 (AASHTO M203M), AND SHALL CONSIST OF 3/8"ø x 270 KSI 7 WIRE LOW RELAXATION STRANDS.
5. PRESTRESSING STRANDS SHALL EACH BE PULLED TO HAVE A NET TENSION OF 17.2 K (U.N.O.) AFTER ACCOUNTING FOR CHUCK SLIPPAGE. TENSION SHALL BE VERIFIED BY MEASURING STRAND ELONGATION, (SEE EXAMPLE ELONGATION CALCULATION AND TENSIONING PROCEDURE, THIS SHEET).
6. ENDS OF PRESTRESSING STRANDS SHALL PROJECT 6" MIN. FROM EACH END OF PANEL
7. THE TOPS OF THE PANELS SHALL BE BROOMED TO A SURFACE ROUGHNESS OF 1/16" (U.N.O.) (BROOM DIRECTION PARALLEL TO STRANDS).
8. PANELS SHALL BE HANDLED AND ERECTED USING THE LIFTING INSERTS ONLY. THE MINIMUM SLING ANGLE FROM THE HORIZONTAL SHALL BE 60°. PANELS SHALL BE STORED AND TRANSPORTED WITH TIMBER SUPPORTS WITHIN 2'-0" OF THE PANEL ENDS, UNLESS APPROVED BY J.P. CARRARA & SONS, INC.
9. DESIGN MIX: J.P.C. BRIDGE MIX #425M (NO DCI)
10. QUALITY CONTROL PROCEDURES ARE IN ACCORDANCE WITH PCI REQUIREMENTS, CONTRACT DOCUMENTS & SPECIFICATIONS. J.P. CARRARA & SONS, INC. IS A PCI CERTIFIED PLANT.
11. THE ENGINEER WILL BE NOTIFIED AT LEAST 14 DAYS PRIOR TO THE SCHEDULED START OF CASTING AND AT LEAST 2 DAYS BEFORE THE ACTUAL WORK BEGINS.
12. CURING METHOD: AS SOON AS THE TOP OF THE PANEL IS FINISHED A COVER OF POLY AND A LAYER OF HOMOSOTE, (OR BLUEBOARD) WILL BE PLACED OVER THE PANEL IN A MANNER THAT WILL NOT DISTURB THE BROOM FINISH. THE DESIRED CURING TEMPERATURE RANGE SHALL NOT DROP BELOW 70°F. THE TEMPERATURE SHALL BE RECORDED BY AUTOMATIC SENSOR INSTRUMENTS ON GRAPH CHARTS SPACED NOT MORE THAN 50 FEET APART & WILL CONTINUE UNTIL RELEASE STRENGTH IS ACHIEVED (NATURAL CURE WITH NO EXTERNAL HEAT APPLIED). EACH CHART SHALL BE MARKED AND GIVEN TO THE INSPECTOR (IF APPLICABLE).
13. THE DRILLING OF HOLES OR USE OF POWER ACTUATED TOOLS ON PANELS SHALL NOT BE PERMITTED.
14. THE PANELS SHALL BE ORIENTED AND ERECTED WITH THE MARK-END AS SHOWN ON PLANS.
15. THE GENERAL CONTRACTOR IS RESPONSIBLE FOR FORMING THE END OF THE DECK SLAB PRIOR TO CASTING DECK.

ASTM A 955 (See 2011 General Special Provisions Section 713.01(f) for allowable UNS Designations)

## EXAMPLE PRESTRESSING STRAND ELONGATION CALC. AND TENSIONING

(NOT TO BE USED FOR CONSTRUCTION)

SIZE & GRADE: 3/8"ø x 270 KSI

AREA: 0.085 IN^2

TENSION: 17,200 LBS. EACH STRAND

GRIP TO GRIP: 120'-6" = 120.5'

Es = 28,600,000 PSI (ASSUMED FOR THESE CALCULATIONS; VALUE TO BE OBTAINED FOR STRAND SPOOL ACTUALLY USED)

EXAMPLE: $\Delta = \frac{PL}{AE} = \frac{(17{,}200 - 3{,}000) \times 120.5 \times 12}{0.085 \times 28{,}600{,}000} = 8.45"$

THEREFORE: TOLERANCES: ± 5%

Δ UPPER LIMIT = 1.05 x 8.45" = 8.87" = 8 7/8"

Δ LOWER LIMIT = 0.95 x 8.45" = 8.03" = 8"

EXTRA FORCE REQUIRED TO COMPENSATE FOR 1/2" CHUCK SLIPPAGE:

$\Delta P = \frac{0.5 \times 14{,}200}{8.45} = 840$ LBS.

TOTAL TENSIONING FORCE = 17,200 + 840 = 18,040 LBS.

18,040 LBS

## STRAND TENSIONING PROCEDURE:

1. PULL EACH STRAND INITALLY TO 3,000 LBS.# AND MARK STRAND.
2. THEN PULL EACH STRAND TO A TOTAL TENSION OF ~~18,404 LBS.~~# AND MEASURE ELONGATION AFTER SEATING. IT MUST BE BETWEEN 8" AND 8 7/8".

# NOTE: FORCES READ ON STRESSING JACK GAUGES MUST BE MADE TO CORRESPOND TO ABOVE VALUES BASED ON CALIBRATION DATA FOR SPECIFIC JACK USED.

APPROVAL STAMP:

Vermont Agency of Transportation

RECEIVED

CK'D BY RK OK'D BY WL

January 23, 2015

RESUBMIT NO Approved AsNoted

BY KH DATE 2-18-2015

J.P. CARRARA & SONS INC.
Precast & Prestress Manufacturer
2464 CASE STR., MIDDLEBURY, VERMONT 05753 Phone:(802)388-6361 Fax:(802)388-9010

PCL CONSTRUCTION
CONTRACTOR
TAMPA, FLORIDA

STATE OF VERMONT AGENCY OF TRANSPORTATION
COUNTY OF WINDSOR

TOWN OF HARTFORD
INTERSTATE 91 EXIT 11
BRIDGE NO.: 43 N/S PROJECT NO.: IM 091-2(79)

SUPERSTRUCTURE PLANS

DATE: JAN. 20, 2015
SCALE: NOTED
CHKD: - DFTM: B.L.
JOB NO: 23455-015
DWG. NO: F1

F:\VT-Bridges\23455-15 Hartford\23455-F1.dwg, 1/21/2015 9:27:39 AM

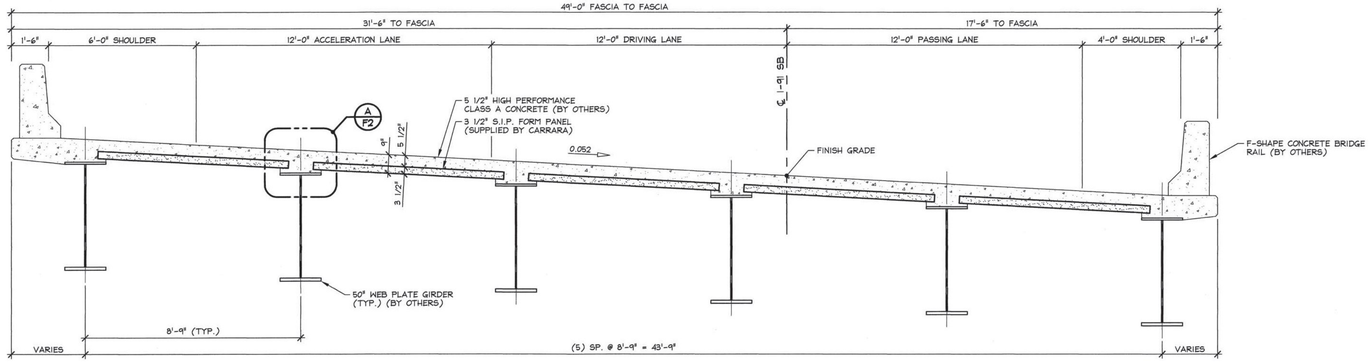


1 / F2 TRANSVERSE SECTION (BRIDGE 43S)

3/8" = 1'-0"

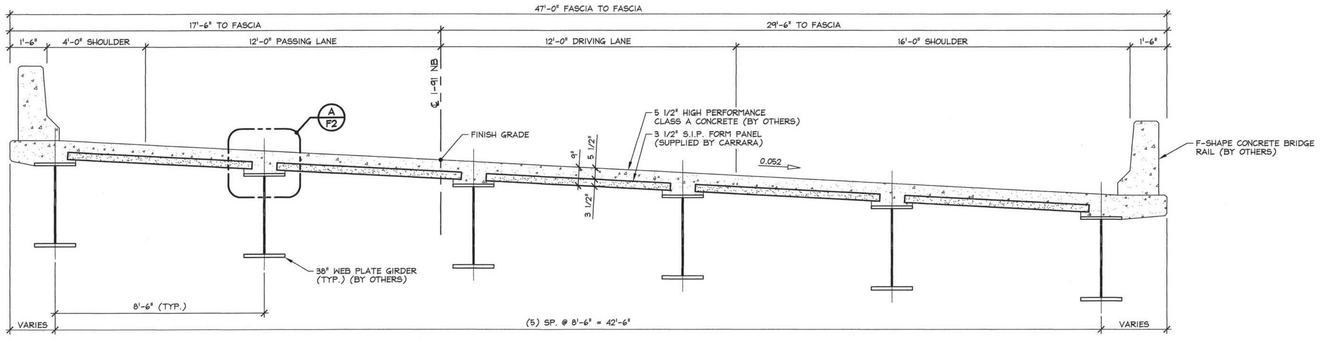


2 / F2 TRANSVERSE SECTION (BRIDGE 43N)

3/8" = 1'-0"

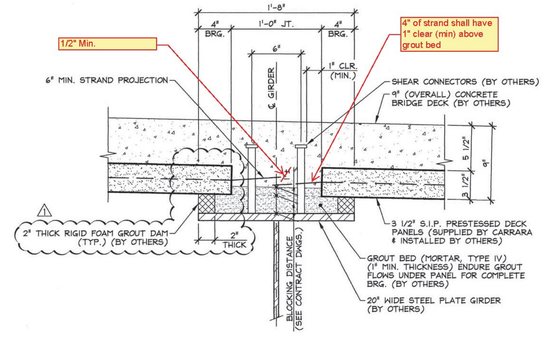


A / F2 SECTION

1 1/2" = 1'-0"

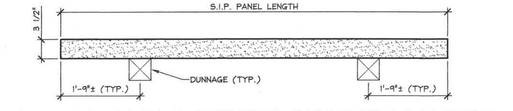


TYP. STORAGE & SHIPPING DUNNAGE LOCATIONS

N.T.S.

1 1-23-15 REVISED AS NOTED

APPROVAL STAMP:

Vermont Agency of Transportation
RECEIVED
CK'D BY RK OK'D BY WL
January 23, 2015
RESUBMIT NO Approved AsNoted
BY KH DATE 2-18-2015

J.P. CARRARA & SONS INC.
Precast & Prestress Manufacturer
2464 OSE STR., MIDDLEBURY, VERMONT 05753 Phone:(802)388-6361 Fax:(802)388-9010

PCL CONSTRUCTION
CONTRACTOR
TAMPA, FLORIDA

STATE OF VERMONT AGENCY OF TRANSPORTATION
COUNTY OF WINDSOR

DATE: JAN. 20, 2015
SCALE: NOTED
CHKD: - DFTM: B.L.
JOB NO: 23455-015

TOWN OF HARTFORD
INTERSTATE 91 EXIT 11
BRIDGE NO.: 43 N/S PROJECT NO.: IM 091-2(79)

SUPERSTRUCTURE SECTIONS & DETAILS

DWG. NO: F2

F:\VT-Bridges\23455-15 Hartford\2345S-F2.dwg, 1/22/2015 5:47:07 PM

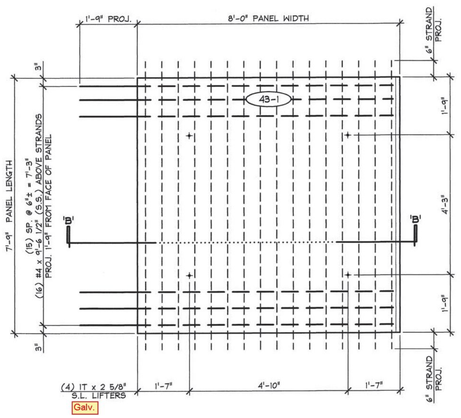


DECK PANEL - '43-1'

1/2" = 1'-0"

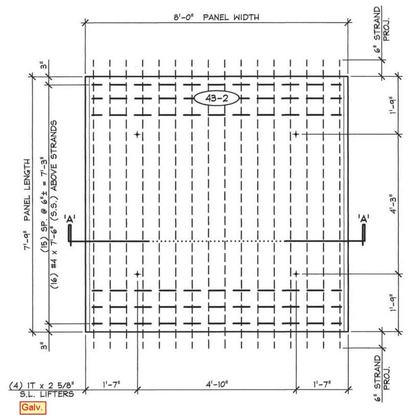


DECK PANEL - '43-2'

1/2" = 1'-0"

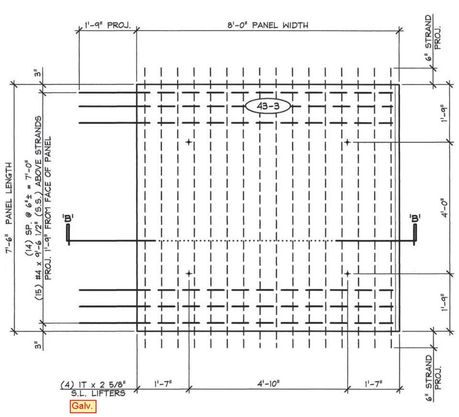


DECK PANEL - '43-3'

1/2" = 1'-0"

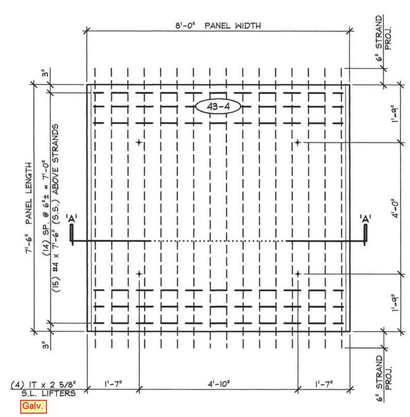


DECK PANEL - '43-4'

1/2" = 1'-0"

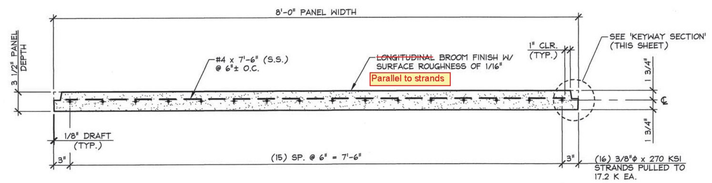


DECK PANEL SECTION - 'A-A'

1" = 1'-0"

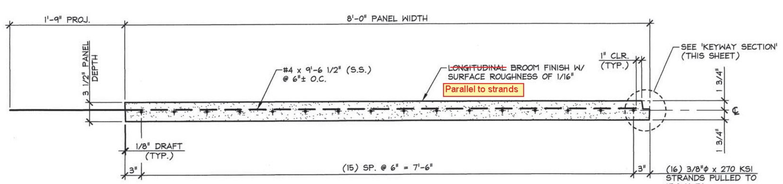


DECK PANEL SECTION - 'B-B'

1" = 1'-0"

① ③ ⑤ ⑦ ⑨ ⑪ ⑬ ⑮ ⑯ ⑭ ⑫ ⑩ ⑧ ⑥ ④ ②

DETENSIONING SCHEDULE

N.T.S.

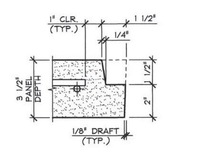


KEYWAY SECTION

3" = 1'-0"

| | | | | | | | |
|---|---|---|---|---|---|---|---|
| MARK: | 43-1 | QTY.: | 10 | WT.: | 1.35 T | VOL.: | 0.66 cy |
| MARK: | 43-2 | QTY.: | 65 | WT.: | 1.34 T | VOL.: | 0.66 cy |
| MARK: | 43-3 | QTY.: | 10 | WT.: | 1.30 T | VOL.: | 0.64 cy |
| MARK: | 43-4 | QTY.: | 65 | WT.: | 1.29 T | VOL.: | 0.64 cy |

MATERIAL LIST / PANEL

| ITEM | DESCRIPTION | QTY./PANEL | | | |
|---|---|---|---|---|---|
| | | 43-1 | 43-2 | 43-3 | 43-4 |
| 1 | #4 x 7'-6" (STAINLESS STEEL) | | 16 | | 15 |
| 2 | #4 x 9'-6 1/2" (STAINLESS STEEL) | 16 | | 15 | |
| 3 | | | | | |
| 4 | | | | | |
| 5 | | | | | |
| 6 | 1T x 2 5/8" SWIFT LIFT LIFTER (GALV.) | 4 | 4 | 4 | 4 |
| 7 | | | | | |
| 8 | ~~LEVELING JACK EMBED INSERTS~~ | | | | |
| 9 | | | | | |
| 10 | | | | | |
| 11 | | | | | |

⚠ 1-23-15 OMIT LEVELING JACKS

APPROVAL STAMP:

Vermont Agency of Transportation

RECEIVED

CK'D BY RK OK'D BY WL

January 23, 2015

RESUBMIT NO Approved AsNoted

BY KH DATE 2-18-2015

J.P. CARRARA & SONS INC.
Precast & Prestress Manufacturer
2464 OLDE STR., MIDDLEBURY, VERMONT 05753 Phone:(802)388-6361 Fax:(802)388-9010

PCL CONSTRUCTION
CONTRACTOR
TAMPA, FLORIDA

STATE OF VERMONT AGENCY OF TRANSPORTATION
COUNTY OF WINDSOR

TOWN OF HARTFORD
INTERSTATE 91 EXIT 11
BRIDGE NO.: 43 N/S PROJECT NO.: IM 091-2(79)

PRESTRESSED S.I.P. FORM PANEL DETAILS

DATE: JAN. 20, 2015
SCALE: NOTED
CHKD: - DFTM: B.L.
JOB NO: 23455-015
DWG. NO: P1

F:\VT-Bridges\23455-15 Hartford\23455-P1.dwg, 1/22/2015 5:44:49 PM

# Structural Steel Repair Procedure

During inspection it was discovered that (2) small areas on I-91NB girder #6 were cut into with a torch. See pictures below for reference:







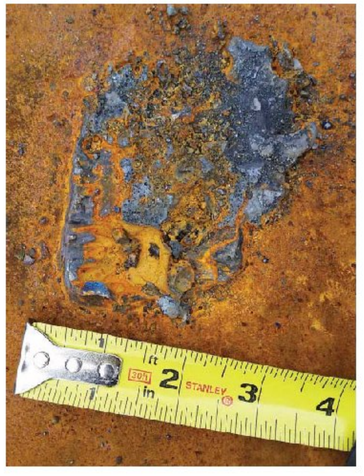

This happened when the welder cut and moved one of the legs for the fall protection. The welder has since been talked to as has the crew. If cutting of any temporary members is required grinders (not torches) are to be used. In no situation shall the permanent girders be damaged.

PCL proposes the following repair procedure:

1. **Grind off all latent materials**
2. **Fill divots with weld (E70XX)**
3. **Grind area to be flush with flange**

Vermont Agency of Transportation
RECEIVED
CK'D BY JC OK'D BY JS
June 24, 2015
RESUBMIT NO Approved
BY JS DATE 6-25-2015

## WELDER, WELDING OPERATOR OR TACK WELDER QUALIFICATION TEST RECORD

**Code:** AASHTO/AWS D1.5M/D1.5:2010

**Name:** Chris Bodisher **Identification No. 0314CB**

**Welding Procedure Specification No.** AWS B2.1-1-016-94R **Date: 05/12/2015**

| Variables | | Record Actual Values Used in Qualification | Qualification Range |
|---|---|---|---|
| Process/Type | | SMAW | SMAW |
| Electrode (single or multiple) | | Single | Single |
| Current/Polarity | | DCEP | DCEP |
| Position | | 2G | Flat/Horizontal |
| | Weld Progression | N/A | N/A |
| Backing (YES or NO) | | Yes | With Steel Backing Only |
| Material/Spec. | | M 270M/ M270 (A 709/A 709M) Gr. 250 [Gr. 36] | M 270M/ M270 (A 709/A 709M) Gr. 250 [Gr. 36] |
| Base Material | | | |
| | Thickness (Plate) | | |
| | Groove | 1" | 1/8" to Unlimited |
| | Fillet | N/A | Flat, Horizontal |
| | Thickness: (Pipe/Tube) | | |
| | Groove | N/A | 1/8" to Unlimited |
| | Fillet | N/A | Unlimited Thickness |
| | Diameter: (Pipe) | | |
| | Groove | N/A | N/A |
| | Fillet | N/A | N/A |
| Filler Metal | | | |
| | Spec. No. | AWS A5.1 | AWS A5.1/A5.1M or AWS A5.5/A5.5M |
| | Class | E7018 | E7018 |
| F-No. | | F4 | F4 Only |
| Gas/Flux Type | | N/A | N/A |
| Other | | N/A | N/A |

Vermont Agency of Transportation
RECEIVED
CK'D BY JC OK'D BY JS
June 24, 2015
RESUBMIT NO Approved
BY JS DATE 6-25-2015

**Visual Inspection: Acceptable YES or NO**

Guided Bend Test Results

| Type | Results | Type | Results |
|---|---|---|---|
| Side | Accept | N/A | |
| Side | Accept | N/A | |

**Fillet Test Results**

Appearance: N/A Fillet Size: N/A

Fracture Test Root Penetration: N/A Macro etch: N/A

(Describe the location, nature and size of any crack or tearing of specimen.)
N/A

Inspected by: Richard Irick Test No: N/A

Organization: VT Nondestructive Testing Date: N/A

**Radiographic Results**

| Film Identification Number | Results | Remarks | Film Identification Number | Results | Remarks |
|---|---|---|---|---|---|
| | | | | | |
| | | | | | |

Interpreted by: N/A Test Number: N/A

Organization: N/A Date: N/A

*We, the undersigned, certify that the statements in this record are correct and that the test welds were prepared, welded and tested in accordance with the requirements of Section 5 of AASHTO/AWS D1.5M/D1.5:2010 Bridge Welding Code*

Inspected by: *Richard Irick AWS/CWI* Witnessed by: Richard Irick

Contractor: PCL Civil Constructors Inc. Date: 5/12/2015

Richard F Irick
CWI 99060221
QC1 EXP. 6/1/2017

VT Nondestructive Testing

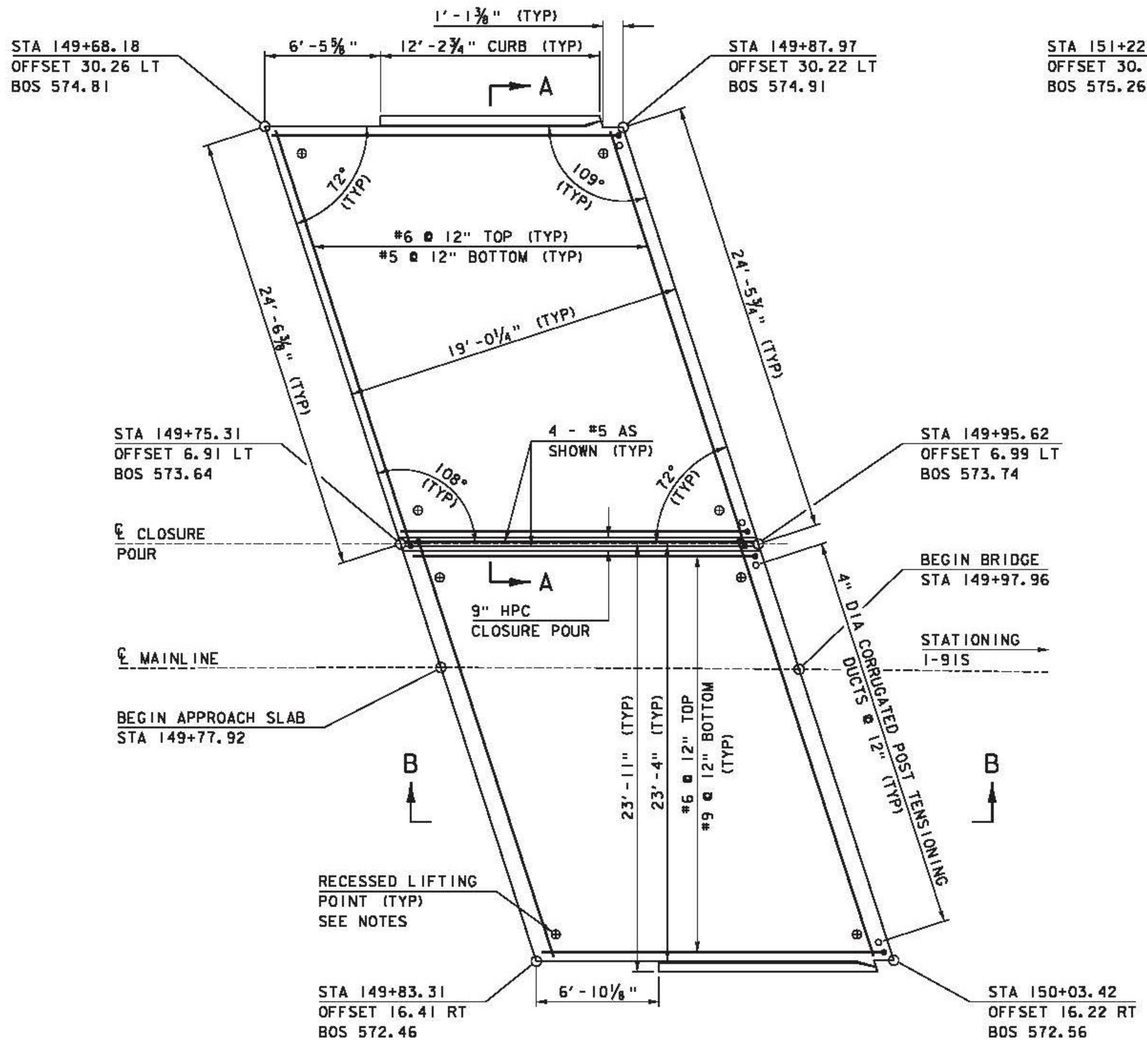


## APPROACH SLAB 1 PLAN

SCALE ¼" = 1'-0"

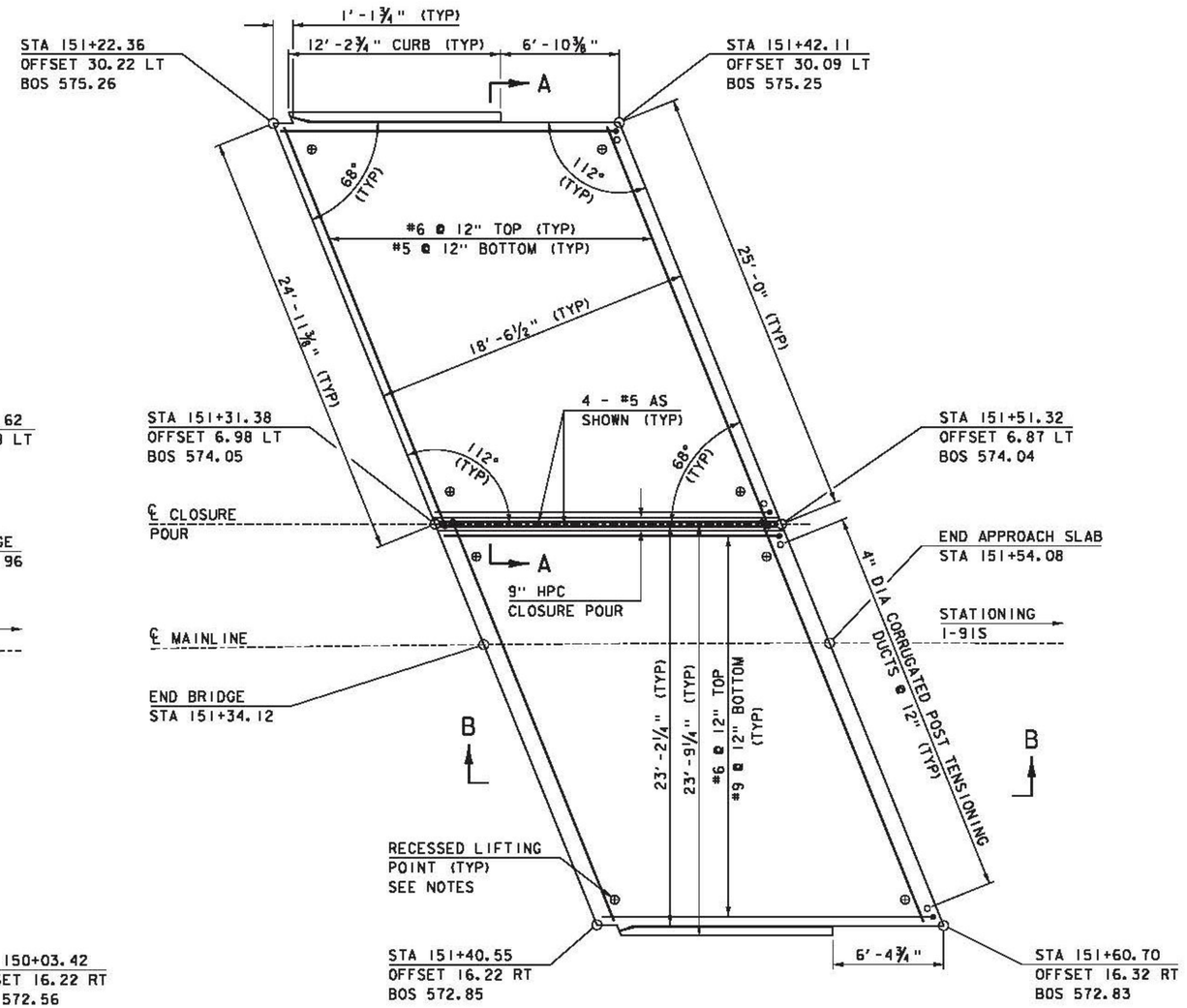


## APPROACH SLAB 2 PLAN

SCALE ¼" = 1'-0"

NOTES:

1) ALL APPROACH SLAB REINFORCING STEEL SHALL BE LEVEL II OR HIGHER.

2) BOS = BOTTOM OF SLAB

3) LIFTING POINTS SAHLL BE DESIGNED BY OTHERS AND CALCULATIONS INCLUDED WITH SUBMITTAL.

NOTE:

NF = NEAR FACE
FF = FAR FACE
EF = EACH FACE
3" CLEAR, UNLESS OTHERWISE SPECIFIED ON THE PLANS.
2'-2" BAR LAP UNLESS OTHERWISE SPECIFIED ON THE PLANS.

| | |
|---|---|
| PROJECT NAME: HARTFORD | |
| PROJECT NUMBER: IM 091-2(79) | |
| FILE NAME: sl2al32apslabs_43S.dgn | PLOT DATE: 15-DEC-2014 |
| PROJECT LEADER: K. HIGGINS | DRAWN BY: K. FRIEDLAND |
| DESIGNED BY: G. LAROCHE | CHECKED BY: W. LAMMER |
| APPROACH SLAB DETAILS 43S | SHEET 97 OF 166 |

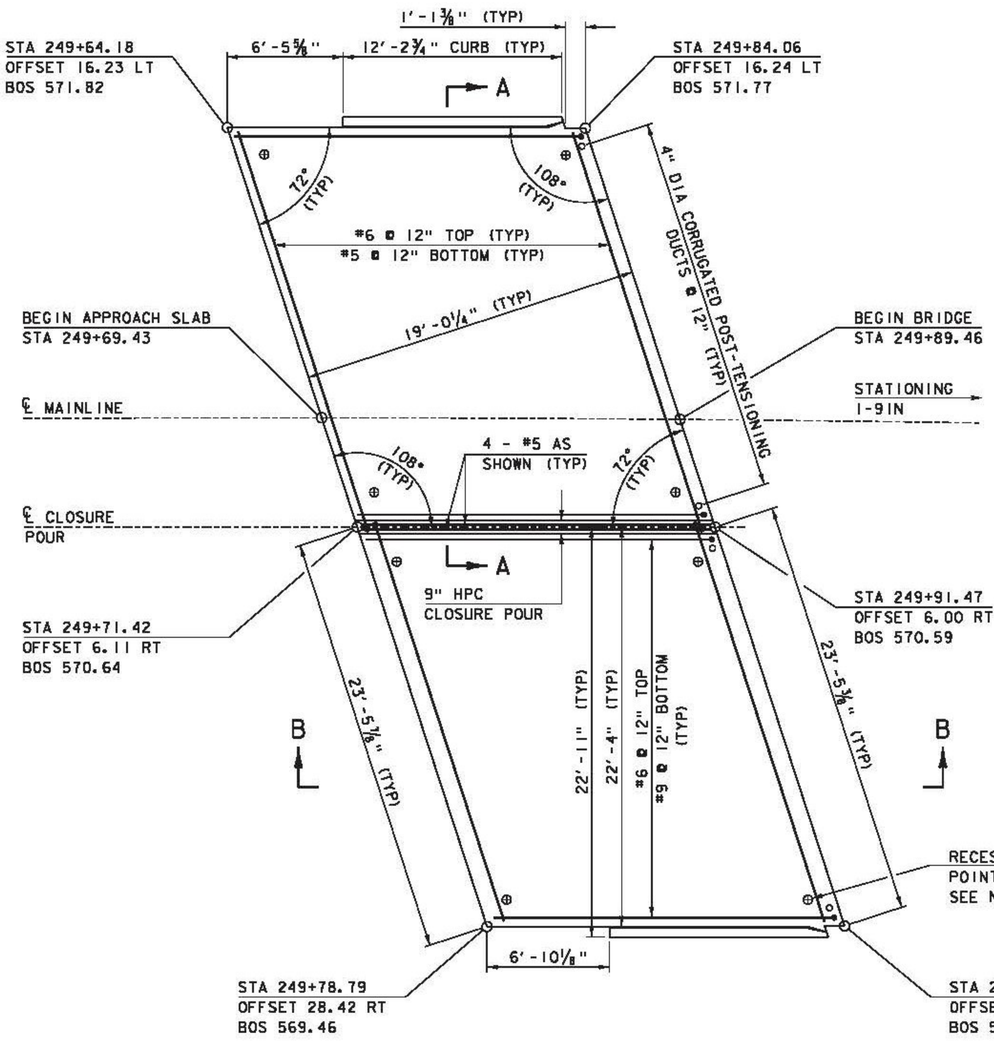


## APPROACH SLAB 3 PLAN

SCALE ¼" = 1'-0"

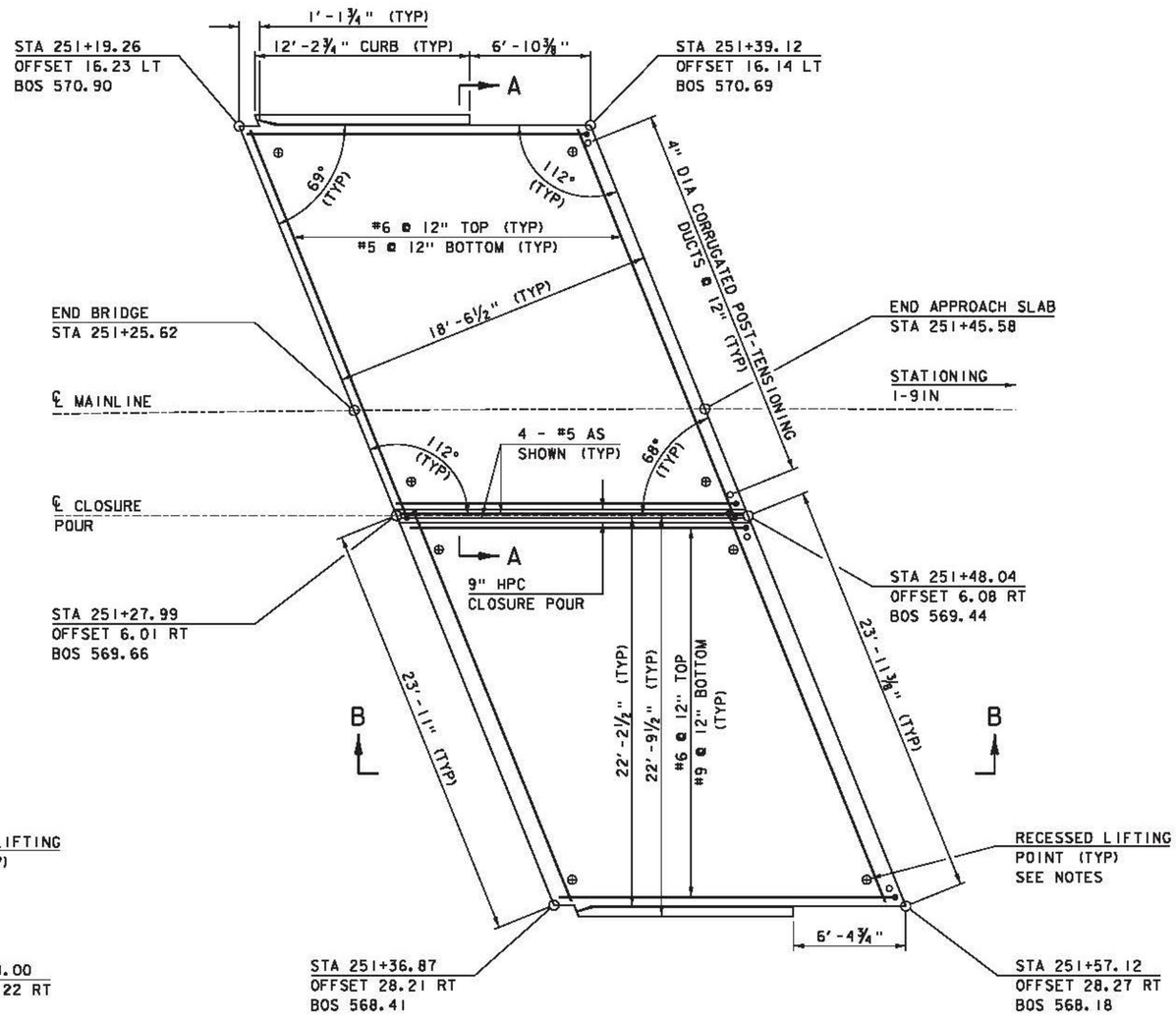


## APPROACH SLAB 4 PLAN

SCALE ¼" = 1'-0"

NOTES:

1) ALL APPROACH SLAB REINFORCING STEEL SHALL BE LEVEL II OR HIGHER.

2) BOS = BOTTOM OF SLAB

3) LIFTING POINTS SAHLL BE DESIGNED BY OTHERS AND CALCULATIONS INCLUDED WITH SUBMITTAL.

NOTE:

NF = NEAR FACE
FF = FAR FACE
EF = EACH FACE
3" CLEAR, UNLESS OTHERWISE SPECIFIED ON THE PLANS.
2'-2" BAR LAP UNLESS OTHERWISE SPECIFIED ON THE PLANS.

| | |
|---|---|
| PROJECT NAME: HARTFORD | |
| PROJECT NUMBER: IM 091-2(79) | |
| FILE NAME: s12a132apslabs_43N.dgn | PLOT DATE: 15-DEC-2014 |
| PROJECT LEADER: K. HIGGINS | DRAWN BY: K. FRIEDLAND |
| DESIGNED BY: G. LAROCHE | CHECKED BY: W. LAMMER |
| APPROACH SLAB DETAILS 43N | SHEET 98 OF 166 |

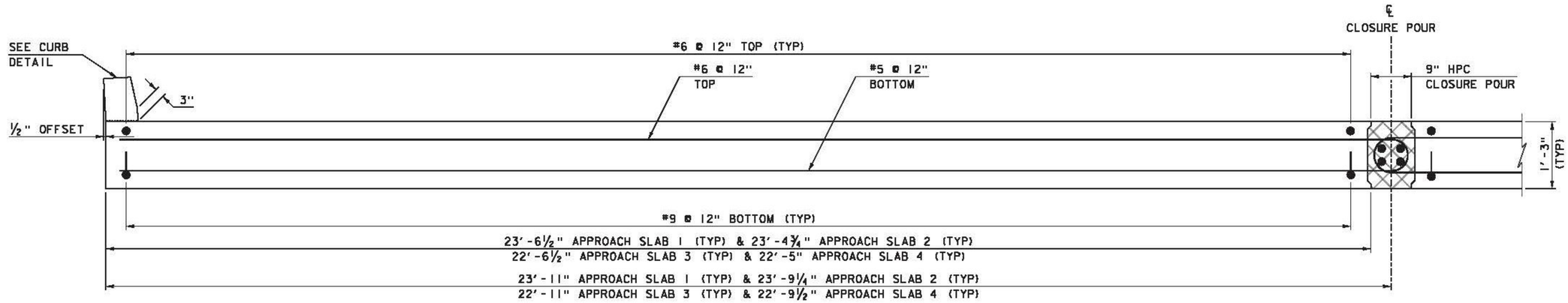


## SECTION A-A

SCALE 1" = 1'-0"

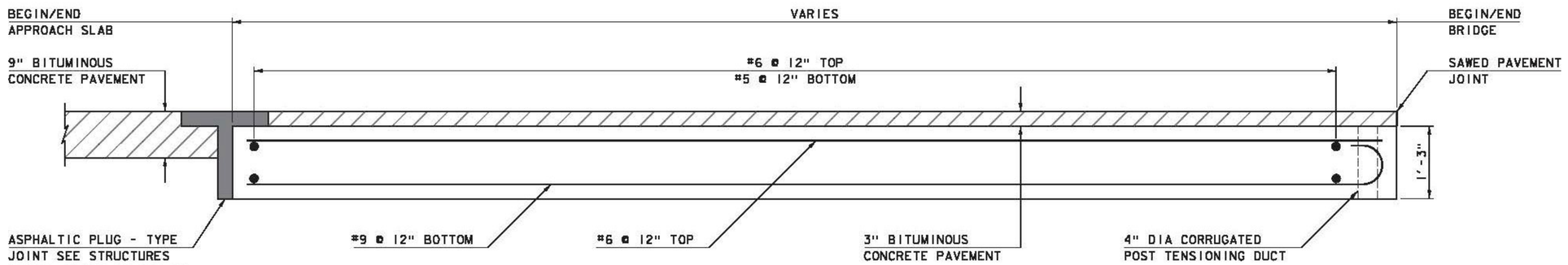


## SECTION B-B

SCALE 1" = 1'-0"

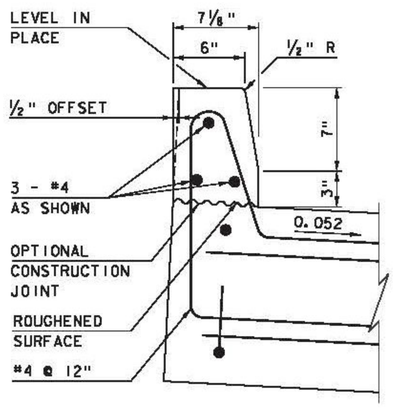


## CURB DETAIL

SCALE 2" = 1'-0"

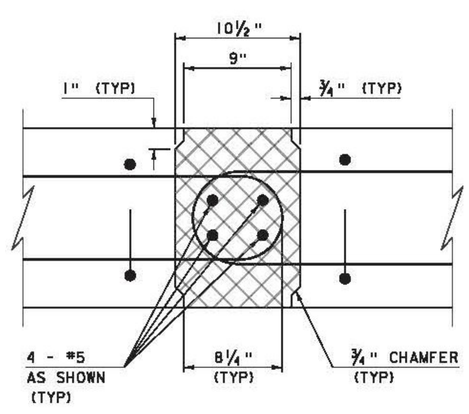


## JOINT DETAIL SECTION

SCALE 2" = 1'-0"

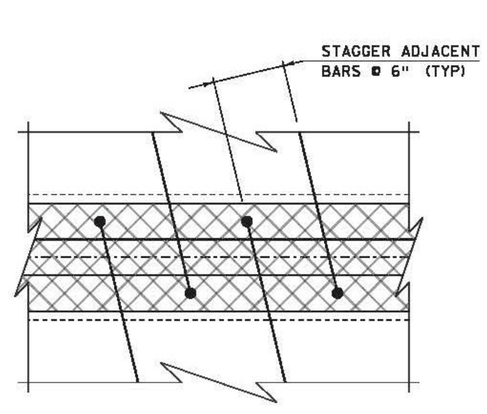


## JOINT DETAIL PLAN

SCALE 2" = 1'-0"

### NOTE:

NF = NEAR FACE
FF = FAR FACE
EF = EACH FACE
▲ = CUT TO FIT IN FIELD
3" CLEAR, UNLESS OTHERWISE SPECIFIED ON THE PLANS.
2'-2" BAR LAP UNLESS OTHERWISE SPECIFIED ON THE PLANS.

NOTES:

1) ALL APPROACH SLAB REINFORCING STEEL SHALL BE LEVEL II OR HIGHER.

| | |
|---|---|
| PROJECT NAME: | HARTFORD |
| PROJECT NUMBER: | IM 091-2(79) |
| FILE NAME: sl2al32apslabs_43S.dgn | PLOT DATE: 15-DEC-2014 |
| PROJECT LEADER: K. HIGGINS | DRAWN BY: K. FRIEDLAND |
| DESIGNED BY: G. LAROCHE | CHECKED BY: W. LAMMER |
| APPROACH SLAB DETAILS | SHEET 99 OF 166 |

# B-12 Coil Rod

Dayton/Richmond B-12 Coil Rod is available in 1/2" to 1-1/2" diameters in 12' lengths. Field cutting can be accomplished with bolt cutters or carborundum blades.

B-12 threaded rod can be used with Coil Ties in many forming combinations to tie formwork, for adjustable ties, for concrete embedments and/or emergency ties.



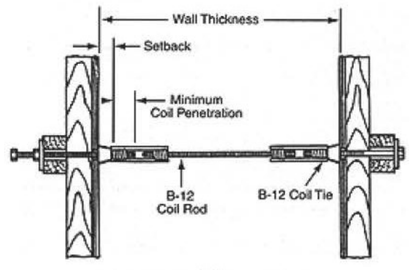


B-39
Wing Nut

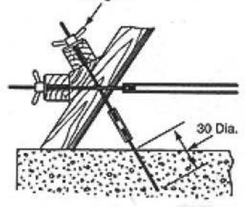


Vermont Agency of Transportation
RECEIVED
ON: May 28, 2015
and Checked for
CONFORMANCE
BY: CB DATE: 6-22-2015

| B-12 Coil Rod Selection Chart | | | | | | |
|---|---|---|---|---|---|---|
| Coil Rod Diameter | Safe Working Loads | | Minimum Root Area (sq. in.) | Tensile Stress (psi.) | Yield Stress (psi.) | Minimum Coil Penetration |
| | Tension (lbs.) | Shear (lbs.) | | | | |
| 1/2" | 9,000 | 6,000 | .1385 | 130,000 | 110,000 | 2" |
| 5/8" | 12,000 | 8,000 | .2124 | 113,000 | 96,000 | 2-1/4" |
| 3/4" | 18,000 | 12,000 | .3079 | 117,000 | 100,000 | 2-1/4" |
| 7/8" | 31,000 | 20,600 | .4477 | 117,000 | 100,000 | 2-1/2" |
| 1" | 38,000 | 25,300 | .5410 | 140,000 | 120,000 | 2-1/2" |
| 1-1/8" | 45,000 | 30,000 | .7163 | 126,600 | 105,000 | 2-1/2" |
| 1-1/4" | 56,000 | 37,500 | .9161 | 123,000 | 105,000 | 2-1/2" |
| 1-1/2" | 68,000 | 45,300 | 1.3892 | 98,000 | 85,000 | 3" |

SWL provides a factor of safety of approximately 2 to 1.

CONSTRUCTION LEADERS

## Design of Lifting Beams Connections

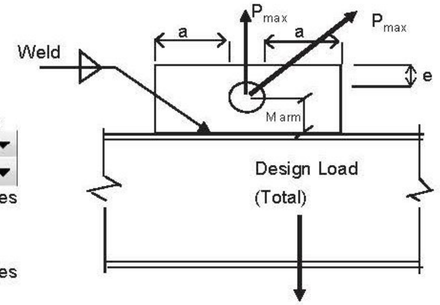


| | | | |
|---|---|---|---|
| | Service Load = | 22.3 | |
| | Impact factor = | 1.5 | |
| **Input:** | Design Load = | 33.45 | Kips |
| | Design Angle = | 90 | |
| | # of Legs of Sling = | 1 | |
| | d = | 1.5 | inches |
| | t = | 1 | inch |
| | $F_u$ = | 58 | ksi |
| | a = | 2 | inches |
| | $F_y$ = | 36 | ksi |
| | e = | 2 | inches |
| | h = | 5.5 | inches |
| | l = | 6 | inches |

| | | |
|---|---|---|
| px = | 0.00 | kips |
| py = | 33.45 | kips |
| Pmax = | 33.45 | kips |

**Ultimate Tensile Load**

| | | | | | |
|---|---|---|---|---|---|
| $P_u$ = | $2*a*t*F_u$ = | 232.0 | kips | | |
| $P_{allow}$ = | $0.20*P_u$ = | **46.40** | kips | **Design Load is O.K.!** | |
| | | | | **46.40** | > **33.45** |

**Lug Tearout ($P_{max}$ Diagonal)**

| | | | | | |
|---|---|---|---|---|---|
| | Load Factor = | 1 | | | |
| $P_{allow}$ = | $1.67*F_b*t*e^2/d$ = | **105.81** | kips | **Design Load is O.K.!** | |
| | $e_{min}$ = | 1.01 | inches | **105.81** | > **33.45** |

**Allowable Crushing**

| | | | | |
|---|---|---|---|---|
| $P_p$ = | $0.9*F_y*t*d$ = | **48.60** | kips | **Design Load is O.K.!** |
| | | | | **48.60** > **33.45** |

**Shear**

| | | | | |
|---|---|---|---|---|
| $P_u$ = | $2*(0.4)*F_y*e*t$ = | **57.60** | kips | **Design Load is O.K.!** |
| | | | | **57.60** > **33.45** |

**Weld Design**

| | | | | | |
|---|---|---|---|---|---|
| | $M_{arm}$ = | 2.75 | inches | $f_m$ = | 0.00 kips/inch |
| | $S_w = d^2/3$ = | 10.08 | $in^2$ | $f_v$ = | 3.04 kips/inch |
| | $A_w$ = | 11 | in | $f_t$ = | 0.00 kips/inch |
| | | | | $f_w$ = | 3.04 kips/inch |

**use 1/4 fillet weld**

Vermont Agency of Transportation
RECEIVED
ON: May 28, 2015
and Checked for
CONFORMANCE
BY: CB DATE: 6-22-2015

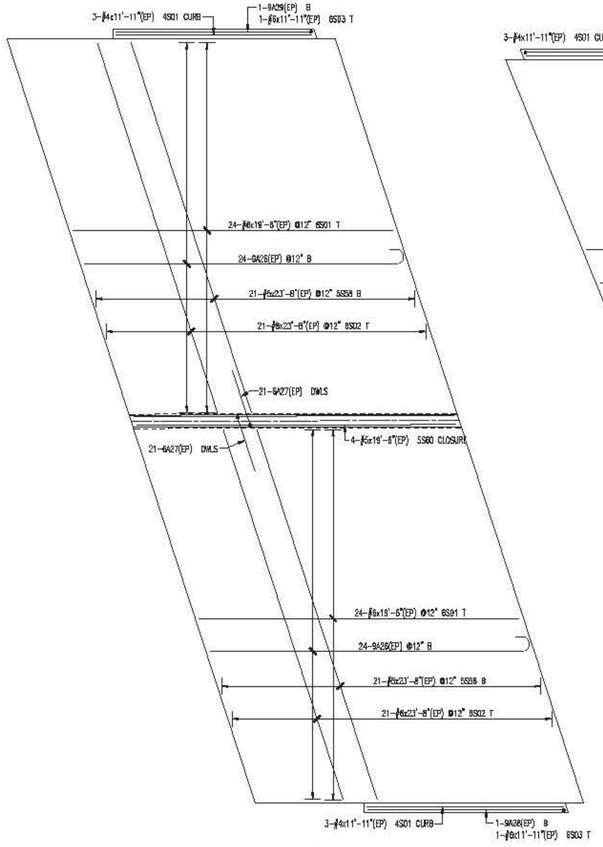


ABUTMENT 1 APPROACH SLAB

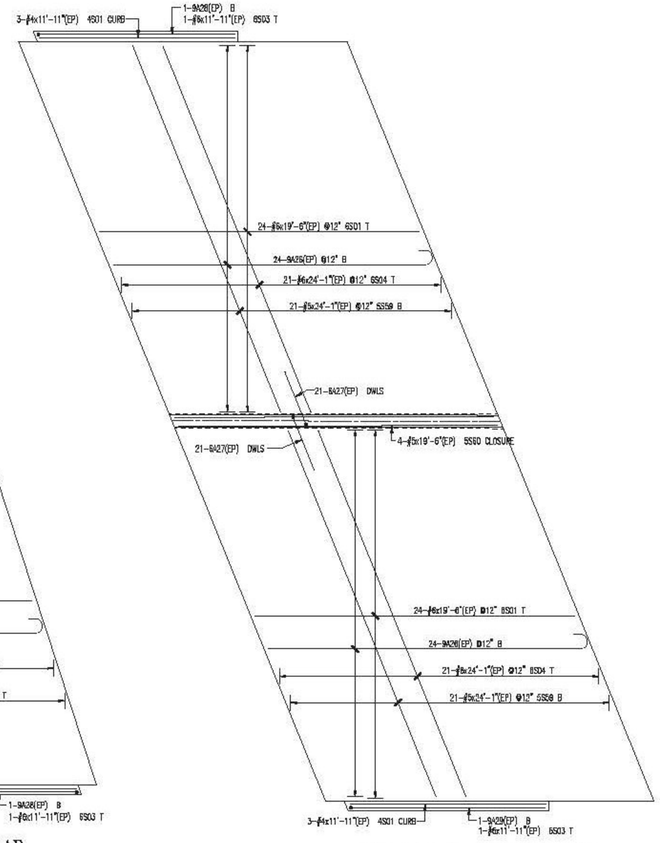


ABUTMENT 2 APPROACH SLAB

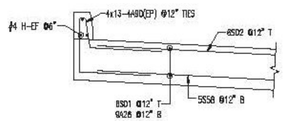


TYPICAL APPROACH SLAB @ CURB

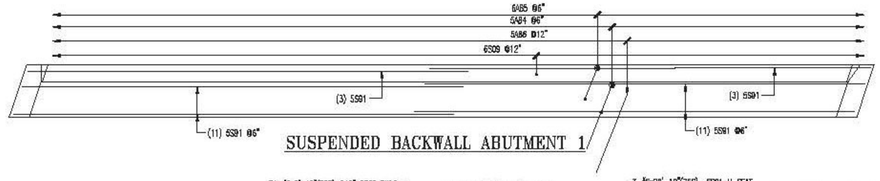


SUSPENDED BACKWALL ABUTMENT 1

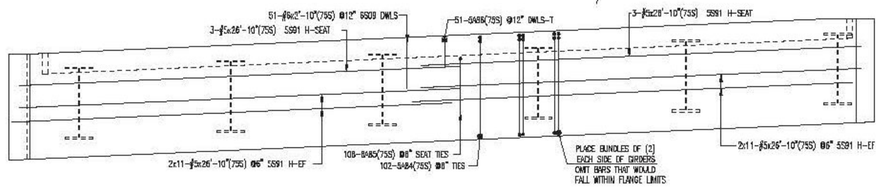


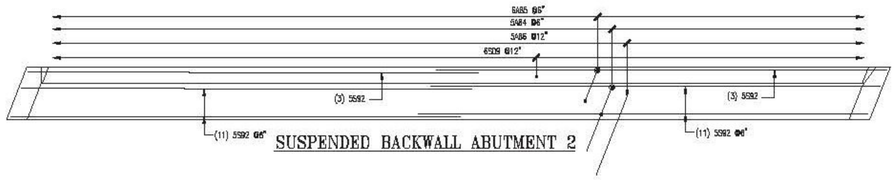


SUSPENDED BACKWALL ABUTMENT 2

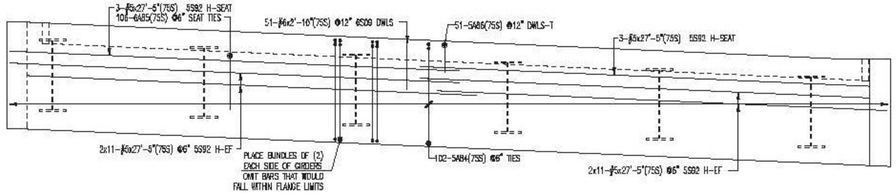


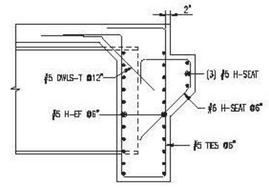


TYPICAL SUSPENDED BACKWALL SECTION

ALL MATERIAL NOTED AS (75S)
SHALL BE "ASTM A955"
STAINLESS STEEL

ALL MATERIAL NOTED AS "EP"
SHALL BE ASTM A1055 GRADE 60
"DUAL COATED"

SEE SHEET R06S FOR BAR LISTS
3" CLR COVER U.N.O.

**LAP CHART-U.N.O.**

| SIZE | TOP BARS * | OTHER BARS |
|---|---|---|
| #11 | | |
| #10 | | |
| #9 | | |
| #8 | 24" | 24" |
| #7 | 41" | 41" |
| #6 | 31" | 31" |
| #5 | 29" | 29" |
| #4 | | |
| #3 | | |

* Top bars are horiz. bars with more than 12" of concrete cast below the bars.

Vermont Agency of Transportation
**RECEIVED**
CK'D BY RK/GL OK'D BY WL
March 9, 2015
RESUBMIT NO Approved
BY KH DATE 3-12-2015

| No. | Description | Date | By |
|---|---|---|---|
| 2 | FINAL APPROVAL PRINT | 03/09/15 | CPS |
| 1 | APPROVAL PRINT | 02/13/15 | CPS |

Revisions and Issue Record

The full intent and purpose of this drawing is the placing of reinforcing steel bars ONLY. It is NOT to be used as a means of communication between the Architect, Engineer, Contractor or any other Sub-trades.

THIS DRAWING IS NOT TO BE SCALED.

HarrisRebar Surface Steel — National Strength. Local Service.

DETAILED AT:
CANAAN
NEW HAMPSHIRE

Project: BRIDGE 43 S REPLACEMENT
I-91 HARTFORD VT

Drawing: I-91 SOUTHBOUND APPROACH SLABS AND SUSPENDED BACKWALLS

Customer: PCL CIVIL CONSTRUCTORS
Engineer: G LAROCHE
Refer to Release:

| Date | Drawn | Chkd. | JOB No. | Dwg. No. |
|---|---|---|---|---|
| 02/09/15 | CPS | | 33505535 | R05S |

W:\example\Projects\33505535\Placing Drawings\DWGs\R015.dwg

Drawing Sheet : R07S — BAR LIST

| | Bar Mark | Qty | Size | Total Length | Type | 'A' | 'B' | 'C' | 'D' | 'E' | 'F' | 'G' | 'H' | 'J' | 'K' | 'L' | 'M' |
|---|---|---|---|---|---|---|---|---|---|---|---|---|---|---|---|---|---|
| | A14b | 1 | #5 | 4'-7" | | | 4'-7" | | | | | | | | | | |
| | Horizontal Bars | | | | | | | | | | | | | | | | |
| 7BR | A14c | 1 | #5 | 7'-0" | | | 7'-0" | | | | | | | | | | |
| 7BR | A40B | 33 | #6 | 7'-0" | 17 | | 2'-0" | 2'-7" | 2'-6" | | | | | | | | |
| 7BR | A40D | 14 | #6 | 5'-4" | 1891 | | 2'-6 1/2" | 2'-6" | | | | | 2'-7 1/2" | | 8 1/2" | | |
| 7BR | A41D | 10 | #6 | 8'-4" | 3 | | 2'-0" | 4'-0" | | | | | 2'-7" | | 2'-10 1/2" | 3'-3 1/2" | |
| 7BR | A41C | 6 | #6 | 10'-0" | 3 | | 2'-6" | 4'-0" | | | | | 2'-7" | | 3'-3 1/2" | 10'-11 1/2" | |
| 7BR | A41J | 14 | #6 | 6'-0" | 17 | | 2'-0" | 1'-7" | 2'-6" | | | | 2'-4 1/2" | | 3'-4" | | |
| 7BR | A41G | 1 | #6 | 11'-0" | 3 | | 2'-0 1/2" | 3'-7 1/2" | | | | | 1'-0 1/2" | | 2'-4" | 10'-0 1/2" | |
| 7BR | A41H | 1 | #6 | 11'-0" | 3 | | 2'-0 1/2" | 3 1/2" | | | | | 2 1/2" | | 3" | 7'-10 1/2" | |
| 7BR | A40A | 23 | #6 | 4'-10" | 3 | | 2'-0" | 2'-0" | | | | | 1'-7" | | 1'-6 1/2" | 4'-2 1/2" | |
| 7BR | A31B | 7 | #6 | 5'-7" | | | 5'-7" | | | | | | | | | | |
| 7BR | A31C | 8 | #6 | 3'-11" | | | 3'-11" | | | | | | | | | | |
| 7BR | A32D | 10 | #6 | 3'-1" | | | 3'-1" | | | | | | | | | | |
| 7BR | A32C | 7 | #6 | 7'-4" | | | 7'-4" | | | | | | | | | | |
| 7BR | A32A | 6 | #6 | 5'-8" | | | 5'-8" | | | | | | | | | | |
| 7BR | A32E | 14 | #6 | 8'-7" | | | 8'-7" | | | | | | | | | | |
| 7BR | A24B | 14 | #6 | 7'-10" | | | 7'-10" | | | | | | | | | | |
| 7BR | A22D | 10 | #6 | 5'-7" | | | 5'-7" | | | | | | | | | | |
| 7BR | A22C | 33 | #6 | 7'-0" | | | 7'-0" | | | | | | | | | | |
| 7BR | A22A | 6 | #6 | 4'-10" | | | 4'-10" | | | | | | | | | | |
| 7BR | A22E | 14 | #6 | 8'-7" | | | 8'-7" | | | | | | | | | | |
| 7BR | A21A | 1 | #6 | 11'-11" | | | 11'-11" | | | | | | | | | | |
| 7BR | A21B | 1 | #6 | 11'-11" | | | 11'-11" | | | | | | | | | | |
| 7BR | A21C | 1 | #6 | 11'-11" | | | 11'-11" | | | | | | | | | | |
| 7BR | A21D | 1 | #6 | 11'-11" | | | 11'-11" | | | | | | | | | | |
| 7BR | A21E | 1 | #6 | 11'-11" | | | 11'-11" | | | | | | | | | | |
| 7BR | A21F | 1 | #6 | 11'-11" | | | 11'-11" | | | | | | | | | | |
| 7BR | A21G | 1 | #6 | 11'-11" | | | 11'-11" | | | | | | | | | | |
| 7BR | A21H | 1 | #6 | 11'-11" | | | 11'-11" | | | | | | | | | | |
| 7BR | A21J | 1 | #6 | 11'-11" | | | 11'-11" | | | | | | | | | | |
| 7BR | A21K | 1 | #6 | 11'-11" | | | 11'-11" | | | | | | | | | | |
| 7BR | A21L | 1 | #6 | 11'-11" | | | 11'-11" | | | | | | | | | | |
| 7BR | A21M | 1 | #6 | 11'-11" | | | 11'-11" | | | | | | | | | | |
| 7BR | A21N | 1 | #6 | 11'-11" | | | 11'-11" | | | | | | | | | | |
| 7BR | A21P | 1 | #6 | 11'-11" | | | 11'-11" | | | | | | | | | | |
| 7BR | A21Q | 1 | #6 | 11'-11" | | | 11'-11" | | | | | | | | | | |
| 7BR | A21R | 1 | #6 | 11'-11" | | | 11'-11" | | | | | | | | | | |
| 7BR | A21S | 1 | #6 | 11'-11" | | | 11'-11" | | | | | | | | | | |
| 7BR | A21T | 1 | #6 | 11'-11" | | | 11'-11" | | | | | | | | | | |
| 7BR | A21U | 1 | #6 | 11'-11" | | | 11'-11" | | | | | | | | | | |
| 7BR | A21V | 1 | #6 | 11'-11" | | | 11'-11" | | | | | | | | | | |
| 7BR | A21W | 1 | #6 | 11'-11" | | | 11'-11" | | | | | | | | | | |
| 7BR | A21X | 1 | #6 | 11'-11" | | | 11'-11" | | | | | | | | | | |
| 7BR | A21Y | 1 | #6 | 11'-11" | | | 11'-11" | | | | | | | | | | |
| 7BR | A21Z | 1 | #6 | 11'-11" | | | 11'-11" | | | | | | | | | | |
| 7BR | A21AA | 1 | #6 | 11'-11" | | | 11'-11" | | | | | | | | | | |
| 7BR | A21AB | 1 | #6 | 11'-11" | | | 11'-11" | | | | | | | | | | |
| 7BR | A21AC | 1 | #6 | 11'-11" | | | 11'-11" | | | | | | | | | | |
| 7BR | A21AD | 1 | #6 | 11'-11" | | | 11'-11" | | | | | | | | | | |
| 7BR | A21AE | 1 | #6 | 11'-11" | | | 11'-11" | | | | | | | | | | |
| 7BR | A21AF | 1 | #6 | 11'-11" | | | 11'-11" | | | | | | | | | | |
| 7BR | A21AG | 1 | #6 | 11'-11" | | | 11'-11" | | | | | | | | | | |
| 7BR | A21AH | 1 | #6 | 11'-11" | | | 11'-11" | | | | | | | | | | |
| 7BR | A21AJ | 1 | #6 | 11'-11" | | | 11'-11" | | | | | | | | | | |
| 7BR | A21AK | 1 | #6 | 11'-11" | | | 11'-11" | | | | | | | | | | |
| 7BR | A21AL | 1 | #6 | 11'-11" | | | 11'-11" | | | | | | | | | | |
| 7BR | A21AM | 1 | #6 | 11'-11" | | | 11'-11" | | | | | | | | | | |
| 7BR | A21AN | 1 | #6 | 11'-11" | | | 11'-11" | | | | | | | | | | |
| 7BR | A21AP | 1 | #6 | 11'-11" | | | 11'-11" | | | | | | | | | | |
| 7BR | A21AQ | 1 | #6 | 11'-11" | | | 11'-11" | | | | | | | | | | |
| 7BR | A21AR | 1 | #6 | 11'-11" | | | 11'-11" | | | | | | | | | | |
| 7BR | A21AS | 1 | #6 | 11'-11" | | | 11'-11" | | | | | | | | | | |
| 7BR | A21AT | 1 | #6 | 11'-11" | | | 11'-11" | | | | | | | | | | |
| 7BR | A21AU | 1 | #6 | 11'-11" | | | 11'-11" | | | | | | | | | | |
| 7BR | A21AV | 1 | #6 | 11'-11" | | | 11'-11" | | | | | | | | | | |
| 7BR | A21AW | 1 | #6 | 11'-11" | | | 11'-11" | | | | | | | | | | |
| 7BR | A21AX | 1 | #6 | 11'-11" | | | 11'-11" | | | | | | | | | | |
| 7BR | A21AY | 1 | #6 | 11'-11" | | | 11'-11" | | | | | | | | | | |
| 7BR | A21AZ | 1 | #6 | 11'-11" | | | 11'-11" | | | | | | | | | | |
| 7BR | A21BA | 1 | #6 | 11'-11" | | | 11'-11" | | | | | | | | | | |
| 7BR | A21BB | 1 | #6 | 11'-11" | | | 11'-11" | | | | | | | | | | |
| 7BR | A21BC | 1 | #6 | 11'-11" | | | 11'-11" | | | | | | | | | | |
| 7BR | A21BD | 1 | #6 | 11'-11" | | | 11'-11" | | | | | | | | | | |
| 7BR | A21BE | 1 | #6 | 11'-11" | | | 11'-11" | | | | | | | | | | |
| 7BR | A21BF | 1 | #6 | 11'-11" | | | 11'-11" | | | | | | | | | | |
| 7BR | A21BG | 1 | #6 | 11'-11" | | | 11'-11" | | | | | | | | | | |
| 7BR | A21BH | 1 | #6 | 11'-11" | | | 11'-11" | | | | | | | | | | |
| 7BR | A21BJ | 1 | #6 | 11'-11" | | | 11'-11" | | | | | | | | | | |
| 7BR | A21BK | 1 | #6 | 11'-11" | | | 11'-11" | | | | | | | | | | |
| 7BR | A21BL | 1 | #6 | 11'-11" | | | 11'-11" | | | | | | | | | | |
| 7BR | A21BM | 1 | #6 | 11'-11" | | | 11'-11" | | | | | | | | | | |
| 7BR | A21BN | 1 | #6 | 11'-11" | | | 11'-11" | | | | | | | | | | |
| 7BR | A21BP | 1 | #6 | 11'-11" | | | 11'-11" | | | | | | | | | | |
| 7BR | A21BQ | 1 | #6 | 11'-11" | | | 11'-11" | | | | | | | | | | |
| 7BR | A21BR | 1 | #6 | 11'-11" | | | 11'-11" | | | | | | | | | | |
| 7BR | A21BS | 1 | #6 | 11'-11" | | | 11'-11" | | | | | | | | | | |
| 7BR | A21BT | 1 | #6 | 11'-11" | | | 11'-11" | | | | | | | | | | |
| 7BR | A21BU | 1 | #6 | 11'-11" | | | 11'-11" | | | | | | | | | | |
| 7BR | A21BV | 1 | #6 | 11'-11" | | | 11'-11" | | | | | | | | | | |
| 7BR | A21BW | 1 | #6 | 11'-11" | | | 11'-11" | | | | | | | | | | |
| 7BR | A21BX | 1 | #6 | 11'-11" | | | 11'-11" | | | | | | | | | | |
| 7BR | A21BY | 1 | #6 | 11'-11" | | | 11'-11" | | | | | | | | | | |
| 7BR | A21BZ | 1 | #6 | 11'-11" | | | 11'-11" | | | | | | | | | | |
| 7BR | A21CA | 1 | #6 | 11'-11" | | | 11'-11" | | | | | | | | | | |
| 7BR | A21CB | 1 | #6 | 11'-11" | | | 11'-11" | | | | | | | | | | |
| 7BR | A21CC | 1 | #6 | 11'-11" | | | 11'-11" | | | | | | | | | | |
| 7BR | A21CD | 1 | #6 | 11'-11" | | | 11'-11" | | | | | | | | | | |
| 7BR | A21CE | 1 | #6 | 11'-11" | | | 11'-11" | | | | | | | | | | |
| 7BR | A21CF | 1 | #6 | 11'-11" | | | 11'-11" | | | | | | | | | | |
| 7BR | A21CG | 1 | #6 | 11'-11" | | | 11'-11" | | | | | | | | | | |
| 7BR | A21CH | 1 | #6 | 11'-11" | | | 11'-11" | | | | | | | | | | |
| 7BR | A21CJ | 1 | #6 | 11'-11" | | | 11'-11" | | | | | | | | | | |
| 7BR | A21CK | 1 | #6 | 11'-11" | | | 11'-11" | | | | | | | | | | |
| 7BR | A21CL | 1 | #6 | 11'-11" | | | 11'-11" | | | | | | | | | | |
| 7BR | A21CM | 1 | #6 | 11'-11" | | | 11'-11" | | | | | | | | | | |
| 7BR | A21CN | 1 | #6 | 11'-11" | | | 11'-11" | | | | | | | | | | |
| 7BR | A21CP | 1 | #6 | 11'-11" | | | 11'-11" | | | | | | | | | | |
| 7BR | A21CQ | 1 | #6 | 11'-11" | | | 11'-11" | | | | | | | | | | |
| 7BR | A21CR | 1 | #6 | 11'-11" | | | 11'-11" | | | | | | | | | | |
| 7BR | A21CS | 1 | #6 | 11'-11" | | | 11'-11" | | | | | | | | | | |
| 7BR | A21CT | 1 | #6 | 11'-11" | | | 11'-11" | | | | | | | | | | |
| 7BR | A21CU | 1 | #6 | 11'-11" | | | 11'-11" | | | | | | | | | | |
| 7BR | A21CV | 1 | #6 | 11'-11" | | | 11'-11" | | | | | | | | | | |
| 7BR | A21CW | 1 | #6 | 11'-11" | | | 11'-11" | | | | | | | | | | |
| 7BR | A21CX | 1 | #6 | 11'-11" | | | 11'-11" | | | | | | | | | | |
| 7BR | A21CY | 1 | #6 | 11'-11" | | | 11'-11" | | | | | | | | | | |
| 7BR | A21CZ | 1 | #6 | 11'-11" | | | 11'-11" | | | | | | | | | | |
| 7BR | A21DA | 1 | #6 | 11'-11" | | | 11'-11" | | | | | | | | | | |
| 7BR | A21DB | 1 | #6 | 11'-11" | | | 11'-11" | | | | | | | | | | |
| 7BR | A21DC | 1 | #6 | 11'-11" | | | 11'-11" | | | | | | | | | | |
| 7BR | A21DD | 1 | #6 | 11'-11" | | | 11'-11" | | | | | | | | | | |
| 7BR | A21DE | 1 | #6 | 11'-11" | | | 11'-11" | | | | | | | | | | |
| 7BR | A21DF | 1 | #6 | 11'-11" | | | 11'-11" | | | | | | | | | | |
| 7BR | A21DG | 1 | #6 | 11'-11" | | | 11'-11" | | | | | | | | | | |
| 7BR | A21DH | 1 | #6 | 11'-11" | | | 11'-11" | | | | | | | | | | |
| 7BR | A21DJ | 1 | #6 | 11'-11" | | | 11'-11" | | | | | | | | | | |
| 7BR | A21DK | 1 | #6 | 11'-11" | | | 11'-11" | | | | | | | | | | |
| 7BR | A21DL | 1 | #6 | 11'-11" | | | 11'-11" | | | | | | | | | | |
| 7BR | A21DM | 1 | #6 | 11'-11" | | | 11'-11" | | | | | | | | | | |
| 7BR | A21DN | 1 | #6 | 11'-11" | | | 11'-11" | | | | | | | | | | |
| 7BR | A21DP | 1 | #6 | 11'-11" | | | 11'-11" | | | | | | | | | | |
| 7BR | A21DQ | 1 | #6 | 11'-11" | | | 11'-11" | | | | | | | | | | |
| 7BR | A21DR | 1 | #6 | 11'-11" | | | 11'-11" | | | | | | | | | | |
| 7BR | A21DS | 1 | #6 | 11'-11" | | | 11'-11" | | | | | | | | | | |
| 7BR | A21DT | 1 | #6 | 11'-11" | | | 11'-11" | | | | | | | | | | |
| 7BR | A21DU | 1 | #6 | 11'-11" | | | 11'-11" | | | | | | | | | | |
| 7BR | A21DV | 1 | #6 | 11'-11" | | | 11'-11" | | | | | | | | | | |
| 7BR | A21DW | 1 | #6 | 11'-11" | | | 11'-11" | | | | | | | | | | |
| 7BR | A21DX | 1 | #6 | 11'-11" | | | 11'-11" | | | | | | | | | | |
| 7BR | A21DY | 1 | #6 | 11'-11" | | | 11'-11" | | | | | | | | | | |
| 7BR | A21DZ | 1 | #6 | 11'-11" | | | 11'-11" | | | | | | | | | | |
| 7BR | A21EA | 1 | #6 | 11'-11" | | | 11'-11" | | | | | | | | | | |
| 7BR | A21EB | 1 | #6 | 11'-11" | | | 11'-11" | | | | | | | | | | |
| 7BR | A21EC | 1 | #6 | 11'-11" | | | 11'-11" | | | | | | | | | | |
| 7BR | A21ED | 1 | #6 | 11'-11" | | | 11'-11" | | | | | | | | | | |
| 7BR | A21EE | 1 | #6 | 11'-11" | | | 11'-11" | | | | | | | | | | |
| 7BR | A21EF | 1 | #6 | 11'-11" | | | 11'-11" | | | | | | | | | | |
| 7BR | A21EG | 1 | #6 | 11'-11" | | | 11'-11" | | | | | | | | | | |
| 7BR | A21EH | 1 | #6 | 11'-11" | | | 11'-11" | | | | | | | | | | |
| 7BR | A21EJ | 1 | #6 | 11'-11" | | | 11'-11" | | | | | | | | | | |
| 7BR | A21EK | 1 | #6 | 11'-11" | | | 11'-11" | | | | | | | | | | |
| 7BR | A21EL | 1 | #6 | 11'-11" | | | 11'-11" | | | | | | | | | | |
| 7BR | A21EM | 1 | #6 | 11'-11" | | | 11'-11" | | | | | | | | | | |
| 7BR | A21EN | 1 | #6 | 11'-11" | | | 11'-11" | | | | | | | | | | |
| 7BR | A21EP | 1 | #6 | 11'-11" | | | 11'-11" | | | | | | | | | | |
| 7BR | A21EQ | 1 | #6 | 11'-11" | | | 11'-11" | | | | | | | | | | |
| 7BR | A21ER | 1 | #6 | 11'-11" | | | 11'-11" | | | | | | | | | | |
| 7BR | A21ES | 1 | #6 | 11'-11" | | | 11'-11" | | | | | | | | | | |
| 7BR | A21ET | 1 | #6 | 11'-11" | | | 11'-11" | | | | | | | | | | |
| 7BR | A21EU | 1 | #6 | 11'-11" | | | 11'-11" | | | | | | | | | | |
| 7BR | A21EV | 1 | #6 | 11'-11" | | | 11'-11" | | | | | | | | | | |
| 7BR | A21EW | 1 | #6 | 11'-11" | | | 11'-11" | | | | | | | | | | |
| 7BR | A21EX | 1 | #6 | 11'-11" | | | 11'-11" | | | | | | | | | | |
| 7BR | A21EY | 1 | #6 | 11'-11" | | | 11'-11" | | | | | | | | | | |
| 7BR | A21EZ | 1 | #6 | 11'-11" | | | 11'-11" | | | | | | | | | | |
| 7BR | A21FA | 1 | #6 | 11'-11" | | | 11'-11" | | | | | | | | | | |
| 7BR | A21FB | 1 | #6 | 11'-11" | | | 11'-11" | | | | | | | | | | |
| 7BR | A21FC | 1 | #6 | 11'-11" | | | 11'-11" | | | | | | | | | | |
| 7BR | A21FD | 1 | #6 | 11'-11" | | | 11'-11" | | | | | | | | | | |
| 7BR | A21FE | 1 | #6 | 11'-11" | | | 11'-11" | | | | | | | | | | |
| 7BR | A21FF | 1 | #6 | 11'-11" | | | 11'-11" | | | | | | | | | | |
| 7BR | A21FG | 1 | #6 | 11'-11" | | | 11'-11" | | | | | | | | | | |
| 7BR | A21FH | 1 | #6 | 11'-11" | | | 11'-11" | | | | | | | | | | |
| 7BR | A21FJ | 1 | #6 | 11'-11" | | | 11'-11" | | | | | | | | | | |
| 7BR | A21FK | 1 | #6 | 11'-11" | | | 11'-11" | | | | | | | | | | |
| 7BR | A21FL | 1 | #6 | 11'-11" | | | 11'-11" | | | | | | | | | | |
| 7BR | A21FM | 1 | #6 | 11'-11" | | | 11'-11" | | | | | | | | | | |
| 7BR | A21FN | 1 | #6 | 11'-11" | | | 11'-11" | | | | | | | | | | |
| 7BR | A21FP | 1 | #6 | 11'-11" | | | 11'-11" | | | | | | | | | | |
| 7BR | A21FQ | 1 | #6 | 11'-11" | | | 11'-11" | | | | | | | | | | |
| 7BR | A21FR | 1 | #6 | 11'-11" | | | 11'-11" | | | | | | | | | | |
| 7BR | A21FS | 1 | #6 | 11'-11" | | | 11'-11" | | | | | | | | | | |
| 7BR | A21FT | 1 | #6 | 11'-11" | | | 11'-11" | | | | | | | | | | |
| 7BR | A21FU | 1 | #6 | 11'-11" | | | 11'-11" | | | | | | | | | | |
| 7BR | A21FV | 1 | #6 | 11'-11" | | | 11'-11" | | | | | | | | | | |
| 7BR | A21FW | 1 | #6 | 11'-11" | | | 11'-11" | | | | | | | | | | |
| 7BR | A21FX | 1 | #6 | 11'-11" | | | 11'-11" | | | | | | | | | | |
| 7BR | A21FY | 1 | #6 | 11'-11" | | | 11'-11" | | | | | | | | | | |
| 7BR | A21FZ | 1 | #6 | 11'-11" | | | 11'-11" | | | | | | | | | | |
| 7BR | A21GA | 1 | #6 | 11'-11" | | | 11'-11" | | | | | | | | | | |
| 7BR | A21GB | 1 | #6 | 11'-11" | | | 11'-11" | | | | | | | | | | |
| 7BR | A21GC | 1 | #6 | 11'-11" | | | 11'-11" | | | | | | | | | | |
| 7BR | A21GD | 1 | #6 | 11'-11" | | | 11'-11" | | | | | | | | | | |
| 7BR | A21GE | 1 | #6 | 11'-11" | | | 11'-11" | | | | | | | | | | |
| 7BR | A21GF | 1 | #6 | 11'-11" | | | 11'-11" | | | | | | | | | | |
| 7BR | A21GG | 1 | #6 | 11'-11" | | | 11'-11" | | | | | | | | | | |
| 7BR | A21GH | 1 | #6 | 11'-11" | | | 11'-11" | | | | | | | | | | |
| 7BR | A21GJ | 1 | #6 | 11'-11" | | | 11'-11" | | | | | | | | | | |
| 7BR | A21GK | 1 | #6 | 11'-11" | | | 11'-11" | | | | | | | | | | |
| 7BR | A21GL | 1 | #6 | 11'-11" | | | 11'-11" | | | | | | | | | | |
| 7BR | A21GM | 1 | #6 | 11'-11" | | | 11'-11" | | | | | | | | | | |
| 7BR | A21GN | 1 | #6 | 11'-11" | | | 11'-11" | | | | | | | | | | |
| 7BR | A21GP | 1 | #6 | 11'-11" | | | 11'-11" | | | | | | | | | | |
| 7BR | A21GQ | 1 | #6 | 11'-11" | | | 11'-11" | | | | | | | | | | |
| 7BR | A21GR | 1 | #6 | 11'-11" | | | 11'-11" | | | | | | | | | | |
| 7BR | A21GS | 1 | #6 | 11'-11" | | | 11'-11" | | | | | | | | | | |
| 7BR | A21GT | 1 | #6 | 11'-11" | | | 11'-11" | | | | | | | | | | |
| 7BR | A21GU | 1 | #6 | 11'-11" | | | 11'-11" | | | | | | | | | | |
| 7BR | A21GV | 1 | #6 | 11'-11" | | | 11'-11" | | | | | | | | | | |
| 7BR | A21GW | 1 | #6 | 11'-11" | | | 11'-11" | | | | | | | | | | |
| 7BR | A21GX | 1 | #6 | 11'-11" | | | 11'-11" | | | | | | | | | | |
| 7BR | A21GY | 1 | #6 | 11'-11" | | | 11'-11" | | | | | | | | | | |
| 7BR | A21GZ | 1 | #6 | 11'-11" | | | 11'-11" | | | | | | | | | | |
| 7BR | A21HA | 1 | #6 | 11'-11" | | | 11'-11" | | | | | | | | | | |
| 7BR | A21HB | 1 | #6 | 11'-11" | | | 11'-11" | | | | | | | | | | |
| 7BR | A21HC | 1 | #6 | 11'-11" | | | 11'-11" | | | | | | | | | | |
| 7BR | A21HD | 1 | #6 | 11'-11" | | | 11'-11" | | | | | | | | | | |
| 7BR | A21HE | 1 | #6 | 11'-11" | | | 11'-11" | | | | | | | | | | |
| 7BR | A21HF | 1 | #6 | 11'-11" | | | 11'-11" | | | | | | | | | | |
| 7BR | A21HG | 1 | #6 | 11'-11" | | | 11'-11" | | | | | | | | | | |
| 7BR | A21HH | 1 | #6 | 11'-11" | | | 11'-11" | | | | | | | | | | |
| 7BR | A21HJ | 1 | #6 | 11'-11" | | | 11'-11" | | | | | | | | | | |
| 7BR | A21HK | 1 | #6 | 11'-11" | | | 11'-11" | | | | | | | | | | |
| 7BR | A21HL | 1 | #6 | 11'-11" | | | 11'-11" | | | | | | | | | | |
| 7BR | A21HM | 1 | #6 | 11'-11" | | | 11'-11" | | | | | | | | | | |
| 7BR | A21HN | 1 | #6 | 11'-11" | | | 11'-11" | | | | | | | | | | |
| 7BR | A21HP | 1 | #6 | 11'-11" | | | 11'-11" | | | | | | | | | | |
| 7BR | A21HQ | 1 | #6 | 11'-11" | | | 11'-11" | | | | | | | | | | |
| 7BR | A21HR | 1 | #6 | 11'-11" | | | 11'-11" | | | | | | | | | | |
| 7BR | A21HS | 1 | #6 | 11'-11" | | | 11'-11" | | | | | | | | | | |
| 7BR | A21HT | 1 | #6 | 11'-11" | | | 11'-11" | | | | | | | | | | |
| 7BR | A21HU | 1 | #6 | 11'-11" | | | 11'-11" | | | | | | | | | | |
| 7BR | A21HV | 1 | #6 | 11'-11" | | | 11'-11" | | | | | | | | | | |
| 7BR | A21HW | 1 | #6 | 11'-11" | | | 11'-11" | | | | | | | | | | |
| 7BR | A21HX | 1 | #6 | 11'-11" | | | 11'-11" | | | | | | | | | | |
| 7BR | A21HY | 1 | #6 | 11'-11" | | | 11'-11" | | | | | | | | | | |
| 7BR | A21HZ | 1 | #6 | 11'-11" | | | 11'-11" | | | | | | | | | | |
| 7BR | A21JA | 1 | #6 | 11'-11" | | | 11'-11" | | | | | | | | | | |
| 7BR | A21JB | 1 | #6 | 11'-11" | | | 11'-11" | | | | | | | | | | |
| 7BR | A21JC | 1 | #6 | 11'-11" | | | 11'-11" | | | | | | | | | | |
| 7BR | A21JD | 1 | #6 | 11'-11" | | | 11'-11" | | | | | | | | | | |
| 7BR | A21JE | 1 | #6 | 11'-11" | | | 11'-11" | | | | | | | | | | |
| 7BR | A21JF | 1 | #6 | 11'-11" | | | 11'-11" | | | | | | | | | | |
| 7BR | A21JG | 1 | #6 | 11'-11" | | | 11'-11" | | | | | | | | | | |
| 7BR | A21JH | 1 | #6 | 11'-11" | | | 11'-11" | | | | | | | | | | |
| 7BR | A21JJ | 1 | #6 | 11'-11" | | | 11'-11" | | | | | | | | | | |
| 7BR | A21JK | 1 | #6 | 11'-11" | | | 11'-11" | | | | | | | | | | |
| 7BR | A21JL | 1 | #6 | 11'-11" | | | 11'-11" | | | | | | | | | | |
| 7BR | A21JM | 1 | #6 | 11'-11" | | | 11'-11" | | | | | | | | | | |
| 7BR | A21JN | 1 | #6 | 11'-11" | | | 11'-11" | | | | | | | | | | |
| 7BR | A21JP | 1 | #6 | 11'-11" | | | 11'-11" | | | | | | | | | | |
| 7BR | A21JQ | 1 | #6 | 11'-11" | | | 11'-11" | | | | | | | | | | |
| 7BR | A21JR | 1 | #6 | 11'-11" | | | 11'-11" | | | | | | | | | | |
| 7BR | A21JS | 1 | #6 | 11'-11" | | | 11'-11" | | | | | | | | | | |
| 7BR | A21JT | 1 | #6 | 11'-11" | | | 11'-11" | | | | | | | | | | |
| 7BR | A21JU | 1 | #6 | 11'-11" | | | 11'-11" | | | | | | | | | | |
| 7BR | A21JV | 1 | #6 | 11'-11" | | | 11'-11" | | | | | | | | | | |
| 7BR | A21JW | 1 | #6 | 11'-11" | | | 11'-11" | | | | | | | | | | |
| 7BR | A21JX | 1 | #6 | 11'-11" | | | 11'-11" | | | | | | | | | | |
| 7BR | A21JY | 1 | #6 | 11'-11" | | | 11'-11" | | | | | | | | | | |
| 7BR | A21JZ | 1 | #6 | 11'-11" | | | 11'-11" | | | | | | | | | | |
| 7BR | A21KA | 1 | #6 | 11'-11" | | | 11'-11" | | | | | | | | | | |
| 7BR | A21KB | 1 | #6 | 11'-11" | | | 11'-11" | | | | | | | | | | |
| 7BR | A21KC | 1 | #6 | 11'-11" | | | 11'-11" | | | | | | | | | | |
| 7BR | A21KD | 1 | #6 | 11'-11" | | | 11'-11" | | | | | | | | | | |
| 7BR | A21KE | 1 | #6 | 11'-11" | | | 11'-11" | | | | | | | | | | |
| 7BR | A21KF | 1 | #6 | 11'-11" | | | 11'-11" | | | | | | | | | | |
| 7BR | A21KG | 1 | #6 | 11'-11" | | | 11'-11" | | | | | | | | | | |
| 7BR | A21KH | 1 | #6 | 11'-11" | | | 11'-11" | | | | | | | | | | |
| 7BR | A21KJ | 1 | #6 | 11'-11" | | | 11'-11" | | | | | | | | | | |
| 7BR | A21KK | 1 | #6 | 11'-11" | | | 11'-11" | | | | | | | | | | |
| 7BR | A21KL | 1 | #6 | 11'-11" | | | 11'-11" | | | | | | | | | | |
| 7BR | A21KM | 1 | #6 | 11'-11" | | | 11'-11" | | | | | | | | | | |
| 7BR | A21KN | 1 | #6 | 11'-11" | | | 11'-11" | | | | | | | | | | |
| 7BR | A21KP | 1 | #6 | 11'-11" | | | 11'-11" | | | | | | | | | | |
| 7BR | A21KQ | 1 | #6 | 11'-11" | | | 11'-11" | | | | | | | | | | |
| 7BR | A21KR | 1 | #6 | 11'-11" | | | 11'-11" | | | | | | | | | | |
| 7BR | A21KS | 1 | #6 | 11'-11" | | | 11'-11" | | | | | | | | | | |
| 7BR | A21KT | 1 | #6 | 11'-11" | | | 11'-11" | | | | | | | | | | |
| 7BR | A21KU | 1 | #6 | 11'-11" | | | 11'-11" | | | | | | | | | | |
| 7BR | A21KV | 1 | #6 | 11'-11" | | | 11'-11" | | | | | | | | | | |
| 7BR | A21KW | 1 | #6 | 11'-11" | | | 11'-11" | | | | | | | | | | |
| 7BR | A21KX | 1 | #6 | 11'-11" | | | 11'-11" | | | | | | | | | | |
| 7BR | A21KY | 1 | #6 | 11'-11" | | | 11'-11" | | | | | | | | | | |
| 7BR | A21KZ | 1 | #6 | 11'-11" | | | 11'-11" | | | | | | | | | | |
| 7BR | A21LA | 1 | #6 | 11'-11" | | | 11'-11" | | | | | | | | | | |
| 7BR | A21LB | 1 | #6 | 11'-11" | | | 11'-11" | | | | | | | | | | |
| 7BR | A21LC | 1 | #6 | 11'-11" | | | 11'-11" | | | | | | | | | | |
| 7BR | A21LD | 1 | #6 | 11'-11" | | | 11'-11" | | | | | | | | | | |
| 7BR | A21LE | 1 | #6 | 11'-11" | | | 11'-11" | | | | | | | | | | |
| 7BR | A21LF | 1 | #6 | 11'-11" | | | 11'-11" | | | | | | | | | | |
| 7BR | A21LG | 1 | #6 | 11'-11" | | | 11'-11" | | | | | | | | | | |
| 7BR | A21LH | 1 | #6 | 11'-11" | | | 11'-11" | | | | | | | | | | |
| 7BR | A21LJ | 1 | #6 | 11'-11" | | | 11'-11" | | | | | | | | | | |
| 7BR | A21LK | 1 | #6 | 11'-11" | | | 11'-11" | | | | | | | | | | |
| 7BR | A21LL | 1 | #6 | 11'-11" | | | 11'-11" | | | | | | | | | | |
| 7BR | A21LM | 1 | #6 | 11'-11" | | | 11'-11" | | | | | | | | | | |
| 7BR | A21LN | 1 | #6 | 11'-11" | | | 11'-11" | | | | | | | | | | |
| 7BR | A21LP | 1 | #6 | 11'-11" | | | 11'-11" | | | | | | | | | | |
| 7BR | A21LQ | 1 | #6 | 11'-11" | | | 11'-11" | | | | | | | | | | |
| 7BR | A21LR | 1 | #6 | 11'-11" | | | 11'-11" | | | | | | | | | | |
| 7BR | A21LS | 1 | #6 | 11'-11" | | | 11'-11" | | | | | | | | | | |
| 7BR | A21LT | 1 | #6 | 11'-11" | | | 11'-11" | | | | | | | | | | |
| 7BR | A21LU | 1 | #6 | 11'-11" | | | 11'-11" | | | | | | | | | | |
| 7BR | A21LV | 1 | #6 | 11'-11" | | | 11'-11" | | | | | | | | | | |
| 7BR | A21LW | 1 | #6 | 11'-11" | | | 11'-11" | | | | | | | | | | |
| 7BR | A21LX | 1 | #6 | 11'-11" | | | 11'-11" | | | | | | | | | | |
| 7BR | A21LY | 1 | #6 | 11'-11" | | | 11'-11" | | | | | | | | | | |
| 7BR | A21LZ | 1 | #6 | 11'-11" | | | 11'-11" | | | | | | | | | | |
| 7BR | A21MA | 1 | #6 | 11'-11" | | | 11'-11" | | | | | | | | | | |
| 7BR | A21MB | 1 | #6 | 11'-11" | | | 11'-11" | | | | | | | | | | |
| 7BR | A21MC | 1 | #6 | 11'-11" | | | 11'-11" | | | | | | | | | | |
| 7BR | A21MD | 1 | #6 | 11'-11" | | | 11'-11" | | | | | | | | | | |
| 7BR | A21ME | 1 | #6 | 11'-11" | | | 11'-11" | | | | | | | | | | |
| 7BR | A21MF | 1 | #6 | 11'-11" | | | 11'-11" | | | | | | | | | | |
| 7BR | A21MG | 1 | #6 | 11'-11" | | | 11'-11" | | | | | | | | | | |
| 7BR | A21MH | 1 | #6 | 11'-11" | | | 11'-11" | | | | | | | | | | |
| 7BR | A21MJ | 1 | #6 | 11'-11" | | | 11'-11" | | | | | | | | | | |
| 7BR | A21MK | 1 | #6 | 11'-11" | | | 11'-11" | | | | | | | | | | |
| 7BR | A21ML | 1 | #6 | 11'-11" | | | 11'-11" | | | | | | | | | | |
| 7BR | A21MM | 1 | #6 | 11'-11" | | | 11'-11" | | | | | | | | | | |
| 7BR | A21MN | 1 | #6 | 11'-11" | | | 11'-11" | | | | | | | | | | |
| 7BR | A21MP | 1 | #6 | 11'-11" | | | 11'-11" | | | | | | | | | | |
| 7BR | A21MQ | 1 | #6 | 11'-11" | | | 11'-11" | | | | | | | | | | |
| 7BR | A21MR | 1 | #6 | 11'-11" | | | 11'-11" | | | | | | | | | | |
| 7BR | A21MS | 1 | #6 | 11'-11" | | | 11'-11" | | | | | | | | | | |
| 7BR | A21MT | 1 | #6 | 11'-11" | | | 11'-11" | | | | | | | | | | |
| 7BR | A21MU | 1 | #6 | 11'-11" | | | 11'-11" | | | | | | | | | | |
| 7BR | A21MV | 1 | #6 | 11'-11" | | | 11'-11" | | | | | | | | | | |
| 7BR | A21MW | 1 | #6 | 11'-11" | | | 11'-11" | | | | | | | | | | |
| 7BR | A21MX | 1 | #6 | 11'-11" | | | 11'-11" | | | | | | | | | | |
| 7BR | A21MY | 1 | #6 | 11'-11" | | | 11'-11" | | | | | | | | | | |
| 7BR | A21MZ | 1 | #6 | 11'-11" | | | 11'-11" | | | | | | | | | | |
| 7BR | A21NA | 1 | #6 | 11'-11" | | | 11'-11" | | | | | | | | | | |
| 7BR | A21NB | 1 | #6 | 11'-11" | | | 11'-11" | | | | | | | | | | |
| 7BR | A21NC | 1 | #6 | 11'-11" | | | 11'-11" | | | | | | | | | | |
| 7BR | A21ND | 1 | #6 | 11'-11" | | | 11'-11" | | | | | | | | | | |
| 7BR | A21NE | 1 | #6 | 11'-11" | | | 11'-11" | | | | | | | | | | |
| 7BR | A21NF | 1 | #6 | 11'-11" | | | 11'-

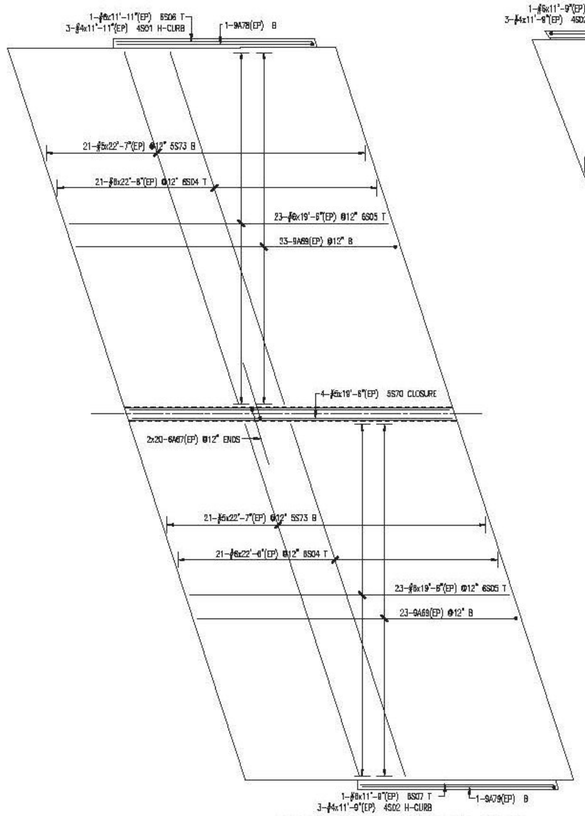


ABUTMENT 3 APPROACH SLAB

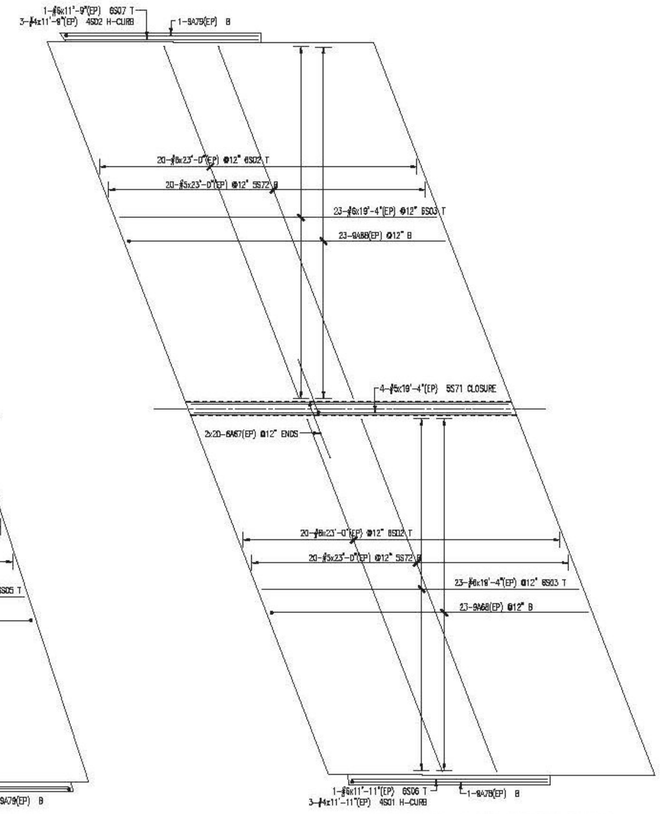


ABUTMENT 4 APPROACH SLAB

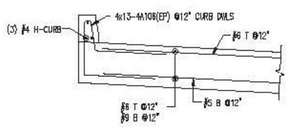


TYPICAL APPROACH SLAB @ CURB

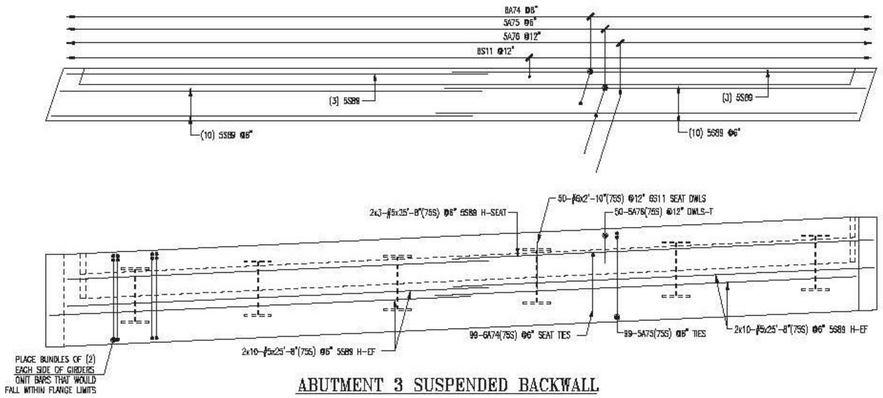


ABUTMENT 3 SUSPENDED BACKWALL

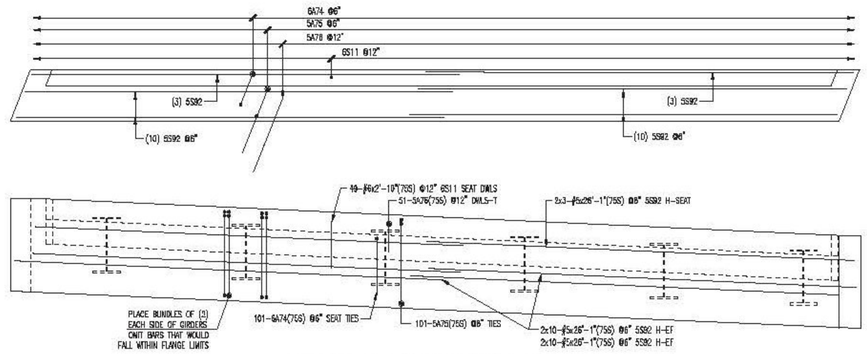


ABUTMENT 4 SUSPENDED BACKWALL

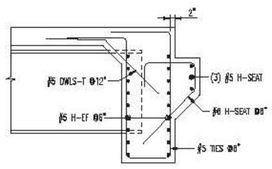


TYPICAL SUSPENDED BACKWALL SECTION

SEE SHEET R05S FOR BAR LISTS
3" CLR COVER U.N.O.

**LAP CHART-U.N.O.**

| SIZE | TOP BARS ☆ | OTHER BARS |
|---|---|---|
| #11 | | |
| #10 | | |
| #9 | | |
| #8 | 3'- | 3'- |
| #7 | 4'- | 4'- |
| #6 | 3'- | 3'- |
| #5 | 2'- | 2'- |
| #4 | | |
| #3 | | |

☆ - Top bars are horiz. bars with more than 12" on concrete cast below the bars.

Vermont Agency of Transportation
RECEIVED
CK'D BY RK/GL OK'D BY WL
March 9, 2015
RESUBMIT NO Approved
BY KH DATE 3-12-2015

ALL MATERIAL ON THIS DRAWING NOTED AS (75S) SHALL BE ASTM A955 STAINLESS STEEL

ALL MATERIAL ON THIS DRAWING NOTED AS (EP) SHALL BE ASTM A1055 GR60 "DUAL COATED" REINF.

| No. | Description | Date | By |
|---|---|---|---|
| 2 | FINAL APPROVAL PRINT | 03/09/15 | CPS |
| 1 | APPROVAL PRINT | 02/18/15 | CPS |

Revisions and Issue Record

The full intent and purpose of this drawing is the placing of reinforcing steel bars ONLY. It is NOT to be used as a means of communication between the Architect, Engineer, Contractor or any other Sub-trades.

THIS DRAWING IS NOT TO BE SCALED.

HarrisRebar — National Strength. Local Service.

DETAILED AT: CANAAN NEW HAMPSHIRE

Project: HARTFORD LATERAL BRIDGE I-91 NORTHBOUND

Drawing: APPROACH SLABS AND BACKWALLS REINF.

Customer: PCL CIVIL CONSTRUCTORS

Engineer: G. LAROCHE

Refer to Release:

| Date | Drawn | Chkd. | JOB No. | Dwg. No. |
|---|---|---|---|---|
| 02/10/15 | CPS | | 33505535 | R05N |

W:\cosimple\Projects\33505535\Placing Drawings\DWGs\R01N.dwg

Drawing Sheet : R01N

BAR LIST

| | Bar Mark | Qty | Size | Total Length | Type | W | Y | U | V | E | F | G | W | U | Y | V | W |
|---|---|---|---|---|---|---|---|---|---|---|---|---|---|---|---|---|---|
| | 01823 | 24 | #5 | 28'-0" | | | 28'-0" | | | | | | | | | | |
| | A961 | 24 | #5 | 10'-11" | | | 10'-11" | | | | | | | | | | |
| | 02012 | 24 | #5 | 14'-0" | | | 14'-0" | | | | | | | | | | |
| | 7561 | 234 | #7 | 14'-0" | | | 14'-0" | | | | | | | | | | |
| | 01803 | 78 | #5 | 10'-0" | | | 10'-0" | | | | | | | | | | |
| | A811 | 74 | #5 | 8'-5 3/4" | 35 | | 1'-6" | 3'-3 3/4" | 18" | 2'-3 3/4" | 1'-6" | | | 1'-3" | | 1'-1 3/4" | |
| | 84422 | 84 | #5 | 13'-3 1/2" | 17 | | 5'-6" | 10'-9" | | | | | | | | | |
| | 02008 | 126 | #5 | 5'-5" | | | 5'-5" | | | | | | | | | | |
| | 79222 | 17 | #7 | 14'-3" | | | 14'-3" | | | | | | | | | | |
| | 79223 | 17 | #7 | 14'-9" | | | 14'-9" | | | | | | | | | | |
| | 79224 | 17 | #7 | 15'-5" | | | 15'-5" | | | | | | | | | | |
| | 79227 | 17 | #7 | 13'-7" | | | 13'-7" | | | | | | | | | | |
| | 79228 | 17 | #7 | 11'-5" | | | 11'-5" | | | | | | | | | | |
| | 79230 | 210 | #7 | 14'-9" | | | 14'-9" | | | | | | | | | | |
| | 02003 | 14 | #5 | 14'-6" | | | 14'-6" | | | | | | | | | | |
| | 02002 | 12 | #5 | 13'-3" | | | 13'-3" | | | | | | | | | | |
| | 02004 | 12 | #5 | 12'-7" | | | 12'-7" | | | | | | | | | | |
| | 02005 | 12 | #5 | 11'-1" | | | 11'-1" | | | | | | | | | | |
| | 02018 | 62 | #5 | 11'-6" | | | 11'-6" | | | | | | | | | | |
| | 02016 | 40 | #5 | 23'-7" | | | 23'-7" | | | | | | | | | | |
| | 79247 | 20 | #5 | 11'-5" | | | 11'-5" | | | | | | | | | | |
| | 02013 | 4 | #5 | 7'-6" | | | 7'-6" | | | | | | | | | | |
| 7980 | 79402 | 34 | #5 | 7'-3 1/2" | 17 | | 6'-3" | 1'-7" | 7'-6" | | | | | | | | |
| 7980 | 84911 | 10 | #5 | 6'-6" | | | 6'-6" | | | | | | | | | | |
| 7980 | 02013 | 10 | #5 | 8'-7" | | | 8'-7" | | | | | | | | | | |
| 7980 | 79407 | 10 | #5 | 7'-3 1/2" | 17 | | 6'-3" | 1'-7" | 7'-6" | | | | | | | | |
| | 02016 | 4 | #5 | 23'-7" | | | 23'-7" | | | | | | | | | | |
| | Varies To | | | | | | | | | | | | | | | | |
| 7980 | A01A | 11 | #5 | 6'-11" | | | 6'-11" | | | | | | | | | | |
| 7980 | 5911 | 2 | #5 | 6'-7" | 3 | | 6'-6 1/2" | 10" | | | | | | 6 3/4" | | 7 3/4" | 5'-4 3/4" |
| 7980 | 79412 | 20 | #5 | 4'-8 3/4" | 3 | | 3'-5" | 5'-4 3/4" | | | | | | 3'-0" | | 1'-4" | 3'-8" |
| | 02003 | 2 | #5 | 6'-6" | | | 6'-6" | | | | | | | | | | |
| | 02413 | 18 | #5 | 10'-11" | 19 | 2'-0" | 4'-7" | 1'-5" | 4'-8" | | | | | 3'-4 3/4" | | 3'-4 3/4" | 4'-8 3/4" |
| | 02014 | 24 | #5 | 6'-0" | | | 6'-0" | | | | | | | | | | |
| | 02015 | 12 | #5 | 8'-0" | | | 8'-0" | | | | | | | | | | |
| 7980 | 79415 | 12 | #5 | 4'-10" | 3 | | 3'-5" | 1'-5" | | | | | | 3'-3 3/4" | | 8 3/4" | 3'-1 3/4" |
| | 02010 | 2 | #5 | 5'-3" | | | 5'-3" | | | | | | | | | | |
| | 79418 | 30 | #5 | 4'-10" | 3 | | 3'-5" | 1'-5" | | | | | | 3'-3 3/4" | | 8 3/4" | 3'-1 3/4" |
| 7980 | 02021 | 2 | #5 | 3'-7" | | | 3'-7" | | | | | | | | | | |
| 7980 | 2821 | 2 | #5 | 3'-7" | | | 3'-7" | | | | | | | | | | |
| 7980 | 5417 | 2 | #5 | 3'-7" | 3 | | 3'-6" | 1'-11" | | | | | | 11" | | 1'-8 1/2" | 5'-4 3/4" |
| 7980 | 02018 | 6 | #5 | 6'-0" | | | 6'-0" | | | | | | | | | | |
| 7980 | 02020 | 6 | #5 | 5'-7" | | | 5'-7" | | | | | | | | | | |
| | 79418 | 8 | #5 | 11'-7" | 3 | | 6'-10" | 4'-8" | | | | | | 3'-4 3/4" | | 3'-3 3/4" | 10'-1 3/4" |
| | 79417 | 18 | #5 | 4'-8 3/4" | 3 | | 3'-5" | 1'-4 3/4" | | | | | | 3'-0" | | 1'-4" | 3'-8" |
| 7980 | A12A | 11 | #5 | 3'-4" | | | 3'-4" | | | | | | | | | | |
| | Varies To | | | | | | | | | | | | | | | | |
| 7980 | A12A | 11 | #5 | 6'-4" | | | 6'-4" | | | | | | | | | | |
| | 7222 | 4 | #7 | 16'-10" | | | 16'-10" | | | | | | | | | | |
| | 5A18A | 24 | #5 | 11'-3" | 3 | | 3'-3 3/4" | 11'-10" | 5'-3 3/4" | | | | | 1'-4" | | 1'-4" | 10'-4" |
| | 5A20A | 18 | #5 | 18'-10 3/4" | 3 | | 5'-3" | 14'-4 3/4" | 5'-3" | | | | | 1'-1" | | 1'-11 3/4" | 18'-4 3/4" |

ABUTMENT 1 AND WING WALLS 1&2

Drawing Sheet : R02N

BAR LIST

| | Bar Mark | Qty | Size | Total Length | Type | W | Y | U | V | E | F | G | W | U | Y | V | W |
|---|---|---|---|---|---|---|---|---|---|---|---|---|---|---|---|---|---|
| | 5A03 | 68 | #5 | 7'-3 1/2" | 17 | | 6'-3" | 1'-7" | 7'-6" | | | | | | | | |
| 7980 | 5535 | 78 | #5 | 8'-5" | | | 8'-5" | | | | | | | | | | |
| 7980 | 5A01 | 22 | #5 | 7'-3 1/2" | 17 | | 6'-3" | 1'-7" | 7'-6" | | | | | | | | |
| 7980 | 5538 | 14 | #5 | 8'-5" | | | 8'-5" | | | | | | | | | | |
| 7980 | 5539 | 6 | #5 | 3'-6" | | | 3'-6" | | | | | | | | | | |
| 7980 | 5537 | 6 | #5 | 3'-0" | | | 3'-0" | | | | | | | | | | |
| 7980 | 5538 | 6 | #5 | 7'-9" | | | 7'-9" | | | | | | | | | | |
| 7980 | 5540 | 102 | #5 | 6'-0" | | | 6'-0" | | | | | | | | | | |
| 7980 | 5407 | 18 | #5 | 8'-3 1/2" | 17 | | 6'-3" | 1'-7" | 7'-6" | | | | | | | | |
| | 5535 | 2 | #5 | 6'-0" | | | 6'-0" | | | | | | | | | | |
| | 5413 | 18 | #5 | 10'-11" | 19 | 2'-0" | 4'-7" | 1'-5" | 4'-8" | | | | | 3'-4 3/4" | | 3'-4 3/4" | 4'-8 3/4" |
| | 5403 | 27 | #5 | 5'-4" | 181 | | 3'-6" | 5'-4" | | | | | | 2'-7" | | 10 3/4" | |
| | 5542 | 2 | #5 | 5'-0" | | | 5'-0" | | | | | | | | | | |
| 7980 | 5539 | 6 | #5 | 8'-3" | | | 8'-3" | | | | | | | | | | |
| 7980 | 8841 | 2 | #5 | 5'-0" | | | 5'-0" | | | | | | | | | | |
| 7980 | 5402 | 2 | #5 | 5'-3" | 3 | | 3'-3" | 1'-11" | | | | | | 1'-10" | | 1'-8 3/4" | 4'-11 3/4" |
| 7980 | 5419 | 6 | #5 | 11'-7" | 3 | | 6'-10" | 4'-8" | | | | | | 3'-4 3/4" | | 3'-3 3/4" | 10'-1 3/4" |
| | 5543 | 30 | #5 | 10'-7" | | | 10'-7" | | | | | | | | | | |
| | 5388 | 170 | #5 | 6'-0" | | | 6'-0" | | | | | | | | | | |
| | 02003 | 26 | #5 | 17'-3" | | | 17'-3" | | | | | | | | | | |
| | 5548 | 22 | #5 | 11'-8" | | | 11'-8" | | | | | | | | | | |
| | 5547 | 38 | #5 | 10'-10" | | | 10'-10" | | | | | | | | | | |
| 7980 | 5533 | 17 | #5 | 7'-6" | | | 7'-6" | | | | | | | | | | |
| 7980 | 5548 | 2 | #5 | 6'-6" | | | 6'-6" | | | | | | | | | | |
| 7980 | 5548 | 2 | #5 | 8'-3" | | | 8'-3" | | | | | | | | | | |
| 7980 | 5405 | 2 | #5 | 7'-11" | 3 | | 7'-6" | 1'" | | | | | | 3 3/4" | | 8 3/4" | 7'-10 3/4" |
| | A24a | 1 | #5 | 6'-3" | | | 6'-3" | | | | | | | | | | |
| | Varies To | | | | | | | | | | | | | | | | |
| 7980 | A24 | 11 | #5 | 8'-9" | | | 8'-9" | | | | | | | | | | |
| 7980 | 8851 | 6 | #5 | 8'-11" | | | 8'-11" | | | | | | | | | | |
| | 8425 | 232 | #6 | 13'-4 1/2" | 17 | | 6'-7" | 10'-6" | | | | | | | | | |
| | 5552 | 11 | #5 | 10'-7" | | | 10'-7" | | | | | | | | | | |
| | 7215 | 14 | #7 | 10'-7" | | | 10'-7" | | | | | | | | | | |
| | 7218 | 56 | #7 | 11'-3" | | | 11'-3" | | | | | | | | | | |
| 7980 | 5A27 | 14 | #5 | 6'-6 1/2" | 3 | | 3'-4" | 3'-4" | | | | | | 1'-8 1/2" | | 1'-7 3/4" | 3'-11 3/4" |
| | 5554 | 2 | #5 | 8'-11" | | | 8'-11" | | | | | | | | | | |
| | 5523 | 27 | #5 | 28'-0" | | | 28'-0" | | | | | | | | | | |
| | 5534 | 14 | #5 | 9'-6" | | | 9'-6" | | | | | | | | | | |
| | 7220 | 148 | #7 | 9'-6" | | | 9'-6" | | | | | | | | | | |
| | 5524 | 48 | #5 | 32'-6" | | | 32'-6" | | | | | | | | | | |
| | 5525 | 24 | #5 | 32'-0" | | | 32'-0" | | | | | | | | | | |
| | 5528 | 2 | #5 | 11'-2" | | | 11'-2" | | | | | | | | | | |
| | 5527 | 24 | #5 | 22'-11" | | | 22'-11" | | | | | | | | | | |
| | 5529 | 1 | #5 | 13'-0" | | | 13'-0" | | | | | | | | | | |
| | 5530 | 1 | #5 | 14'-1" | | | 14'-1" | | | | | | | | | | |
| | 5533 | 12 | #5 | 10'-2" | | | 10'-2" | | | | | | | | | | |
| | 7210 | 12 | #7 | 10'-2" | | | 10'-2" | | | | | | | | | | |
| | 7511 | 12 | #7 | 17'-8" | | | 17'-8" | | | | | | | | | | |
| | 8531 | 12 | #5 | 17'-8" | | | 17'-8" | | | | | | | | | | |
| | 5532 | 12 | #5 | 18'-0" | | | 18'-0" | | | | | | | | | | |
| | 7213 | 12 | #7 | 18'-0" | | | 18'-0" | | | | | | | | | | |
| | 5544 | 12 | #5 | 16'-1" | | | 16'-1" | | | | | | | | | | |
| | 7213 | 12 | #7 | 16'-1" | | | 16'-1" | | | | | | | | | | |
| | 5545 | 12 | #5 | 16'-10" | | | 16'-10" | | | | | | | | | | |
| | 7214 | 12 | #7 | 16'-10" | | | 16'-10" | | | | | | | | | | |
| | 5553 | 27 | #5 | 11'-0" | | | 11'-0" | | | | | | | | | | |
| | 5534 | 27 | #5 | 7'-4" | | | 7'-4" | | | | | | | | | | |
| 7980 | 8561 | 18 | #5 | 40'-0" | | | 40'-0" | | | | | | | | | | |
| 7980 | A28a | 11 | #5 | 4'-3" | | | 4'-3" | | | | | | | | | | |
| | Varies To | | | | | | | | | | | | | | | | |
| 7980 | A28m | 11 | #5 | 6'-8" | | | 6'-8" | | | | | | | | | | |
| 7980 | 5A08 | 12 | #5 | 6'-4" | 181 | | 3'-6" | 5'-4" | | | | | | 2'-7" | | 10 3/4" | |
| | 8459 | 85 | #6 | 16'-4" | 17 | | 6'-7" | 9'-9" | | | | | | | | | |
| | 5A10 | 24 | #5 | 6'-6" | 3 | | 3'-4" | 3'-4" | | | | | | 1'-8 1/2" | | 1'-7 3/4" | 3'-11 3/4" |
| | 5A110 | 27 | #5 | 13'-11 3/4" | 3 | | 5'-3" | 6'-6" | 2'-2 3/4" | | | | | 1'-10" | | 1'-3" | 11'-0" |
| | 5A111 | 23 | #5 | 19'-6" | 3 | | 5'-3" | 14'-4 3/4" | 5'-3" | | | | | 1'" | | 2'-6" | 18'-4 3/4" |

ABUTMENT 2 AND WING WALLS 3&4

Drawing Sheet : R03N

BAR LIST

| | Bar Mark | Qty | Size | Total Length | Type | W | Y | U | V | E | F | G | W | U | Y | V | W |
|---|---|---|---|---|---|---|---|---|---|---|---|---|---|---|---|---|---|
| | 5582 | 180 | #5 | 8'-6" | | | 8'-6" | | | | | | | | | | |
| | 5582 | 148 | #5 | 7'-6" | | | 7'-6" | | | | | | | | | | |
| | 5658 | 14 | #5 | 5'-6" | | | 5'-6" | | | | | | | | | | |
| | 5429 | 284 | #5 | 7'-10 3/4" | 35 | | 2'-0" | 3'-6 3/4" | 3'-0" | | | | | | | | |
| | 5582 | 5 | #5 | 8'-3 3/4" | 3 | | 2'-0" | 6'-11 3/4" | 3'-0" | | | | | 3'-6" | | 3'-6" | 7'-10" |
| | 5430 | 5 | #5 | 8'-3 3/4" | 3 | | 2'-3 3/4" | 6'-11 3/4" | 1'-4 3/4" | | | | | 3'-6" | | 3'-6" | 8'-4" |
| | 5584 | 153 | #5 | 8'-6" | | | 8'-6" | | | | | | | | | | |
| | 5586 | 153 | #5 | 4'-0" | | | 4'-0" | | | | | | | | | | |
| | 5433 | 168 | #5 | 7'-8" | 17 | | 2'-7" | 4'-5" | | | | | | | | | |
| | 5584 | 252 | #5 | 13'-6" | | | 13'-6" | | | | | | | | | | |
| | 5557 | 168 | #5 | 21'-6" | | | 21'-6" | | | | | | | | | | |
| | A32a | 1 | #5 | 18'-7" | | | 18'-7" | | | | | | | | | | |
| | Varies To | | | | | | | | | | | | | | | | |
| | 5A39 | 1 | #5 | 11'-10" | | | 11'-10" | | | | | | | | | | |
| | 5A40 | 156 | #5 | 5'-11" | 17 | | 2'-7" | 1'-7" | 2'-6" | | | | | | | | |
| | 5A62 | 44 | #5 | 6'-6" | | | 6'-6" | | | | | | | | | | |
| | 5A59 | 14 | #5 | 4'-8" | | | 4'-8" | | | | | | | | | | |
| | 5358 | 14 | #5 | 2'-6" | | | 2'-6" | | | | | | | | | | |
| | 5358 | 2 | #5 | 7'-1" | | | 7'-1" | | | | | | | | | | |
| | A41a | 1 | #5 | 6'-5" | | | 6'-5" | | | | | | | | | | |
| | Varies To | | | | | | | | | | | | | | | | |
| | A41b | 1 | #5 | 8'-4" | | | 8'-4" | | | | | | | | | | |
| | A42b | 1 | #5 | 8'-8" | | | 8'-8" | | | | | | | | | | |
| | Varies To | | | | | | | | | | | | | | | | |
| | A42c | 1 | #5 | 6'-4" | | | 6'-4" | | | | | | | | | | |
| | 5A43 | 5 | #5 | 11'-2" | 3 | | 3'-4" | 5'-6" | 3'-2" | | | | | 4'-6" | | 4'-6" | 6'-6" |
| | 5586 | 153 | #5 | 6'-6" | | | 6'-6" | | | | | | | | | | |
| | 5582 | 288 | #5 | 10'-8" | | | 10'-8" | | | | | | | | | | |
| | 5A43 | 324 | #5 | 8'-4 1/2" | 35 | | 2'-0" | 4'-6" | | | | | | | | | |
| | 5A44 | 5 | #5 | 10'-6" | 3 | | 3'-0" | 5'-6" | 3'-2" | | | | | 4'-6" | | 4'-6" | 8'-4" |
| | 5581 | 324 | #5 | 26'-6" | | | 26'-6" | | | | | | | | | | |
| | A47a | 1 | #5 | 10'-10" | | | 10'-10" | | | | | | | | | | |
| | Varies To | | | | | | | | | | | | | | | | |
| | A47b | 1 | #5 | 17'-4" | | | 17'-4" | | | | | | | | | | |
| | A32a | 3 | #5 | 7'-8" | | | 7'-8" | | | | | | | | | | |
| | Varies To | | | | | | | | | | | | | | | | |
| | A33A | 3 | #5 | 8'-3" | | | 8'-3" | | | | | | | | | | |
| | A01A | 3 | #5 | 12'-5" | | | 12'-5" | | | | | | | | | | |
| | Varies To | | | | | | | | | | | | | | | | |
| | A02c | 2 | #5 | 12'-6" | | | 12'-6" | | | | | | | | | | |
| | A02b | 3 | #5 | 10'-11" | | | 10'-11" | | | | | | | | | | |
| | Varies To | | | | | | | | | | | | | | | | |
| | A02c | 2 | #5 | 17'-3" | | | 17'-3" | | | | | | | | | | |
| | 5A33 | 5 | #5 | 8'-4" | 3 | | 2'-6" | 5'-10" | 3'-0" | | | | | 3'-6" | | 3'-6" | 7'-5" |
| | 5A34 | 10 | #5 | 7'-7" | 3 | | 1'-7" | 5'-10" | 3'-0" | | | | | 3'-6" | | 3'-6" | 8'-4" |
| | 5A35 | 9 | #5 | 5'-10 3/4" | 35 | | 2'-6" | 1'-4" | 3'-0" | | | | | | | | |
| | 5A36 | 198 | #5 | 6'-4 3/4" | 35 | | 2'-0" | 2'-6" | 3'-0" | | | | | | | | |
| | 5388 | 8 | #5 | 5'-0" | | | 5'-0" | | | | | | | | | | |
| | 5383 | 4 | #5 | 22'-6" | | | 22'-6" | | | | | | | | | | |
| | 5384 | 4 | #5 | 36'-6" | | | 36'-6" | | | | | | | | | | |
| | A38a | 2 | #5 | 5'-6" | | | 5'-6" | | | | | | | | | | |
| | Varies To | | | | | | | | | | | | | | | | |
| | A39a | 2 | #5 | 33'-6" | | | 33'-6" | | | | | | | | | | |
| | 5558 | 2 | #5 | 35'-6" | | | 35'-6" | | | | | | | | | | |
| | A39a | 1 | #7 | 18'-10" | | | 18'-10" | | | | | | | | | | |
| | Varies To | | | | | | | | | | | | | | | | |
| | 6A4J | 1 | #7 | 16'-6" | | | 16'-6" | | | | | | | | | | |
| | A02a | 2 | #5 | 14'-1" | | | 14'-1" | | | | | | | | | | |
| | Varies To | | | | | | | | | | | | | | | | |
| | A03a | 2 | #5 | 15'-6" | | | 15'-6" | | | | | | | | | | |
| | A01a | 2 | #5 | 10'-5" | | | 10'-5" | | | | | | | | | | |
| | Varies To | | | | | | | | | | | | | | | | |
| | A07A | 2 | #5 | 11'-11" | | | 11'-11" | | | | | | | | | | |
| | A02b | 2 | #5 | 6'-6" | | | 6'-6" | | | | | | | | | | |
| | Varies To | | | | | | | | | | | | | | | | |
| | A02A | 2 | #5 | 8'-6" | | | 8'-6" | | | | | | | | | | |
| | A03A | 2 | #5 | 8'-6" | | | 8'-6" | | | | | | | | | | |
| | Varies To | | | | | | | | | | | | | | | | |
| | A58A | 1 | #5 | 8'-6" | | | 8'-6" | | | | | | | | | | |
| | 6A4A | 1 | #5 | 10'-6" | | | 10'-6" | | | | | | | | | | |
| | A06a | 1 | #5 | 12'-6" | | | 12'-6" | | | | | | | | | | |
| | A02a | 1 | #5 | 14'-2" | | | 14'-2" | | | | | | | | | | |
| | A08a | 1 | #5 | 17'-6" | | | 17'-6" | | | | | | | | | | |
| | Varies To | | | | | | | | | | | | | | | | |
| | A09A | 1 | #5 | 15'-6" | | | 15'-6" | | | | | | | | | | |
| | 5A01 | 80 | #5 | 8'-6" | 35 | | 1'-6" | 1'-6" | 10" | 1'-6" | 1'-6" | | 1'-3 3/4" | | 2" | | |
| | 5401 | 8 | #5 | 8'-5 3/4" | 35 | | 1'-6" | 2'-3 3/4" | 10" | 2'-3 3/4" | 1'-6" | | 2'-3" | | 7 3/4" | | |
| | A34a | 1 | #5 | 14'-4" | | | 14'-4" | | | | | | | | | | |
| | Varies To | | | | | | | | | | | | | | | | |
| | A34b | 1 | #5 | 14'-7" | | | 14'-7" | | | | | | | | | | |
| | Varies To | | | | | | | | | | | | | | | | |
| | A38a | 1 | #5 | 14'-7" | | | 14'-7" | | | | | | | | | | |
| | A49a | 1 | #5 | 7'-8" | | | 7'-8" | | | | | | | | | | |
| | Varies To | | | | | | | | | | | | | | | | |
| | A49d | 1 | #5 | 8'-3" | | | 8'-3" | | | | | | | | | | |
| | A50A | 3 | #5 | 8'-3" | | | 8'-3" | | | | | | | | | | |
| | A07A | 3 | #5 | 12'-5" | | | 12'-5" | | | | | | | | | | |
| | Varies To | | | | | | | | | | | | | | | | |
| | A07c | 2 | #5 | 12'-6" | | | 12'-6" | | | | | | | | | | |
| | A02c | 3 | #5 | 10'-11" | | | 10'-11" | | | | | | | | | | |
| | Varies To | | | | | | | | | | | | | | | | |
| | A02c | 2 | #5 | 17'-3" | | | 17'-3" | | | | | | | | | | |
| | A33A | 3 | #5 | 8'-3" | | | 8'-3" | | | | | | | | | | |
| | 5A01 | 80 | #5 | 8'-6" | 35 | | 1'-6" | 1'-6" | 10" | 1'-6" | 1'-6" | | 1'-3 3/4" | | 2" | | |
| | 5401 | 8 | #5 | 8'-5 3/4" | 35 | | 1'-6" | 2'-3 3/4" | 10" | 2'-3 3/4" | 1'-6" | | 2'-3" | | 7 3/4" | | |
| | A34a | 1 | #5 | 14'-4" | | | 14'-4" | | | | | | | | | | |
| | Varies To | | | | | | | | | | | | | | | | |
| | A34b | 1 | #5 | 14'-7" | | | 14'-7" | | | | | | | | | | |
| | Varies To | | | | | | | | | | | | | | | | |
| | A38a | 1 | #5 | 14'-7" | | | 14'-7" | | | | | | | | | | |
| | A49a | 1 | #5 | 7'-8" | | | 7'-8" | | | | | | | | | | |
| | Varies To | | | | | | | | | | | | | | | | |
| | A49d | 1 | #5 | 8'-3" | | | 8'-3" | | | | | | | | | | |
| | A50A | 3 | #5 | 8'-3" | | | 8'-3" | | | | | | | | | | |
| | A07A | 3 | #5 | 12'-5" | | | 12'-5" | | | | | | | | | | |
| | Varies To | | | | | | | | | | | | | | | | |
| | A07c | 2 | #5 | 12'-6" | | | 12'-6" | | | | | | | | | | |
| | A02c | 3 | #5 | 10'-11" | | | 10'-11" | | | | | | | | | | |
| | Varies To | | | | | | | | | | | | | | | | |
| | A02c | 2 | #5 | 17'-3" | | | 17'-3" | | | | | | | | | | |
| | A33A | 3 | #5 | 8'-3" | | | 8'-3" | | | | | | | | | | |

RETAINING WALLS 5,6,7,8

MATERIAL/COATING CODE TO THE LEFT OF BAR MARK ADDED BY PCL

Drawing Sheet : R04N

BAR LIST

| | Bar Mark | Qty | Size | Total Length | Type | W | Y | U | V | E | F | G | W | U | Y | V | W |
|---|---|---|---|---|---|---|---|---|---|---|---|---|---|---|---|---|---|
| | 6892 | 8 | #5 | 18'-5" | | | 18'-5" | | | | | | | | | | |
| | 8953 | 25 | #5 | 30'-0" | | | 30'-0" | | | | | | | | | | |
| | 7517 | 8 | #7 | 12'-5" | | | 12'-5" | | | | | | | | | | |
| | 7518 | 25 | #7 | 30'-0" | | | 30'-0" | | | | | | | | | | |
| | 6A31 | 418 | #5 | 10'-8" | H3 | | 7'-8" | 1'-3 3/4" | 5'-11" | | | | | | 2 3/4" | | 5 3/4" 4 3/4" |
| | 5471 | 328 | #5 | 6'-10" | H1 | | 1'-3" | 3'-6" | 1'-1" | 3'-6" | 1'-3" | | | | 3" | | 2'-4 3/4" 3" |
| | 5472 | 26 | #5 | 8'-7" | H3 | | 1'-6" | 3'-3 3/4" | 5" | 7'-11 3/4" | 1'-6" | | | | | | |
| | 7218 | 16 | #7 | 15'-6" | | | 15'-6" | | | | | | | | | | |
| | 7230 | 32 | #7 | 14'-6" | | | 14'-6" | | | | | | | | | | |
| | A72a | 4 | #5 | 2'-8" | 17 | | 2'-7" | 6" | 1'-7" | | | | | | | | |
| | Varies To | | | | | | | | | | | | | | | | |
| | A33 | 4 | #5 | 7'-8" | 17 | | 2'-7" | 1'-7" | 3'-6" | | | | | | | | |
| | 5574 | 378 | #5 | 38'-0" | | | 38'-0" | | | | | | | | | | |
| | 8958 | 58 | #5 | 38'-0" | | | 38'-0" | | | | | | | | | | |
| | 8810 | 14 | #5 | 26'-1" | | | 26'-1" | | | | | | | | | | |
| | A42a | 1 | #5 | 4'-6" | | | 4'-6" | | | | | | | | | | |
| | Varies To | | | | | | | | | | | | | | | | |
| | A03a | 1 | #5 | 28'-4" | | | 28'-4" | | | | | | | | | | |
| | 5484 | 126 | #5 | 5'-4" | 1 | 3" | 4'-9" | | | | | | | | 5" | | |
| | 4833 | 468 | #4 | 6'-10" | 1 | 3" | 6'-7" | | | | | | | | 5" | | |
| | 5486 | 168 | #5 | 3'-4 3/4" | 1 | 3" | 2'-4 3/4" | | | | | | | | 5" | | |
| | A44a | 1 | #5 | 2'-7" | | | 2'-7" | | | | | | | | | | |
| | Varies To | | | | | | | | | | | | | | | | |
| | A05a | 1 | #5 | 22'-4" | | | 22'-4" | | | | | | | | | | |
| | A04a | 1 | #5 | 18'-2" | | | 18'-2" | | | | | | | | | | |
| | Varies To | | | | | | | | | | | | | | | | |
| | A05A | 1 | #5 | 25'-10" | | | 25'-10" | | | | | | | | | | |
| | A03a | 1 | #5 | 17'-10" | | | 17'-10" | | | | | | | | | | |
| | Varies To | | | | | | | | | | | | | | | | |
| | A03 | 1 | #5 | 26'-8" | | | 26'-8" | | | | | | | | | | |
| | A07A | 7 | #5 | 18'-6" | | | 18'-6" | | | | | | | | | | |
| | 5478 | 16 | #5 | 18'-0" | | | 18'-0" | | | | | | | | | | |
| | A01a | 1 | #5 | 5'-2" | | | 5'-2" | | | | | | | | | | |
| | Varies To | | | | | | | | | | | | | | | | |
| | A09a | 1 | #5 | 28'-10" | | | 28'-10" | | | | | | | | | | |
| | A02a | 1 | #5 | 18'-2" | | | 18'-2" | | | | | | | | | | |
| | Varies To | | | | | | | | | | | | | | | | |
| | A05c | 1 | #5 | 25'-0" | | | 25'-0" | | | | | | | | | | |
| | A03a | 1 | #5 | 17'-11" | | | 17'-11" | | | | | | | | | | |
| | Varies To | | | | | | | | | | | | | | | | |
| | A03A | 1 | #5 | 26'-8" | | | 26'-8" | | | | | | | | | | |
| | 5580 | 16 | #5 | 18'-11" | | | 18'-11" | | | | | | | | | | |
| | 5581 | 16 | #5 | 11'-5" | | | 11'-5" | | | | | | | | | | |
| | A02c | 1 | #5 | 2'-7" | | | 2'-7" | | | | | | | | | | |
| | Varies To | | | | | | | | | | | | | | | | |
| | A03A | 1 | #5 | 23'-11" | | | 23'-11" | | | | | | | | | | |
| | A04a | 1 | #5 | 5'-4" | | | 5'-4" | | | | | | | | | | |
| | Varies To | | | | | | | | | | | | | | | | |
| | A07m | 1 | #5 | 29'-10" | | | 29'-10" | | | | | | | | | | |
| | A35a | 5 | #5 | 6'-3" | | | 6'-3" | | | | | | | | | | |
| | Varies To | | | | | | | | | | | | | | | | |
| | A02 | 5 | #5 | 6'-10" | | | 6'-10" | | | | | | | | | | |
| | A04a | 5 | #5 | 6'-4" | | | 6'-4" | | | | | | | | | | |
| | Varies To | | | | | | | | | | | | | | | | |
| | A04 | 5 | #5 | 6'-11" | | | 6'-11" | | | | | | | | | | |

DECK REINFORCEMENT

Drawing Sheet : R05N

BAR LIST

| | Bar Mark | Qty | Size | Total Length | Type | W | Y | U | V | E | F | G | W | U | Y | V | W |
|---|---|---|---|---|---|---|---|---|---|---|---|---|---|---|---|---|---|
| 7980 | 8474 | 208 | #5 | 7'-3" | 18 | | 5'-1" | 1'-3" | 3'-0" | | | | | 3'-1 3/4" | | 3'-3 3/4" | |
| 7980 | 5475 | 208 | #5 | 18'-9" | 1883 | | 2'-3" | 1'-10" | 4'-11" | 2'-3" | | | | | | 3 3/4" | |
| 7980 | 5474 | 1248 | #5 | 5'-6" | 3 | | 3'-11" | 2'-6" | | | | | | 1'-9 3/4" | | 1'-8 3/4" | 4'-9 3/4" |
| EP | 8478 | 2 | #8 | 13'-2" | 1 | 1'-3" | 11'-11" | | | | | | | | | | |
| EP | 8506 | 2 | #8 | 11'-11" | | | 11'-11" | | | | | | | | | | |
| EP | 4521 | 8 | #4 | 11'-11" | | | 11'-11" | | | | | | | | | | |
| EP | 8529 | 2 | #3 | 12'-9" | 1 | 1'-3" | 11'-9" | | | | | | | | | | |
| EP | 8547 | 2 | #8 | 11'-9" | | | 11'-9" | | | | | | | | | | |
| EP | 4522 | 8 | #4 | 11'-6" | | | 11'-6" | | | | | | | | | | |
| 7980 | 8532 | 168 | #5 | 28'-1" | | | 28'-1" | | | | | | | | | | |
| 7980 | 8511 | 84 | #8 | 2'-10" | | | 2'-10" | | | | | | | | | | |
| EP | 8488 | 48 | #8 | 20'-4.5" | 1 | 1'-3" | 19'-1.5" | | | | | | | | | | |
| EP | 8525 | 48 | #8 | 19'-6" | | | 19'-6" | | | | | | | | | | |
| EP | 8489 | 48 | #8 | 20'-7" | 1 | 1'-3" | 19'-4" | | | | | | | | | | |
| EP | 8523 | 48 | #8 | 19'-4" | | | 19'-4" | | | | | | | | | | |
| EP | 8542 | 48 | #8 | 22'-6" | | | 22'-6" | | | | | | | | | | |
| EP | 3572 | 48 | #5 | 22'-6" | | | 22'-6" | | | | | | | | | | |
| EP | 3534 | 42 | #5 | 22'-7" | | | 22'-7" | | | | | | | | | | |
| EP | 4508 | 42 | #8 | 22'-6" | | | 22'-6" | | | | | | | | | | |
| EP | 3570 | 4 | #5 | 18'-6" | | | 18'-6" | | | | | | | | | | |
| EP | 5521 | 4 | #5 | 18'-4" | | | 18'-4" | | | | | | | | | | |
| EP | 8487 | 184 | #8 | 7'-3 1/2" | 511 | | 1'-3 1/2" | | | | | | | 3'-6" | | | 3" |
| 7980 | 5488 | 168 | #5 | 25'-8" | | | 25'-8" | | | | | | | | | | |
| EP | 4A106 | 132 | #4 | 7'-6" | 181 | | 5'-2" | 1'-9 3/4" | 3 3/4" | 10" | 2'-3" | | | | | | 1 3/4" |

APPROACH SLABS AND SUSPENDED BACKWALLS

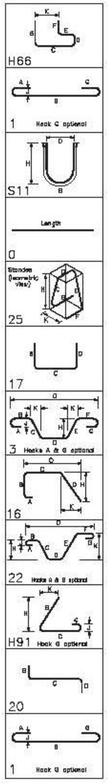


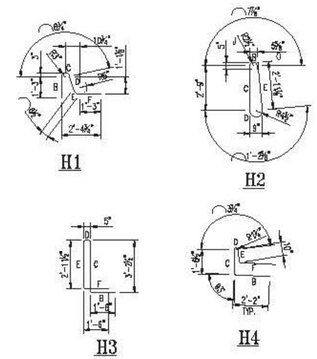


SPECIAL BEND DETAILS

| No. | Description | Date | By |
|---|---|---|---|
| 2 | FINAL APPROVAL PRINT | 03/09/15 | CPS |
| 1 | APPROVAL PRINT | 02/18/15 | CPS |

Revisions and Issue Record

The full intent and purpose of this drawing is the placing of reinforcing steel bars ONLY. It is NOT to be used as a means of communication between the Architect, Engineer, Contractor or any other Sub-trades.

THIS DRAWING IS NOT TO BE SCALED.

HarrisRebar Harker Steel — National Strength. Local Service.

DETAILED AT:
CANAAN
NEW HAMPSHIRE

Project: HARTFORD LATERAL BRIDGE
I-91 NORTHBOUND

Drawing: BAR SCHEDULES

Customer: PCL CIVIL CONSTRUCTORS

Engineer: G. LAROCHE

Refer to Release:

| Date | Drawn | Chkd. | JOB No. | Dwg. No. |
|---|---|---|---|---|
| 02/10/15 | CPS | | 33505535 | R06N |

Vermont Agency of Transportation
RECEIVED
CK'D BY RK/GL OK'D BY WL
March 9, 2015
RESUBMIT NO Approved AsNoted
BY KH DATE 3-12-2015

W:\cesample\Projects\33505535\Placing Drawings\DWGs\R01N.dwg

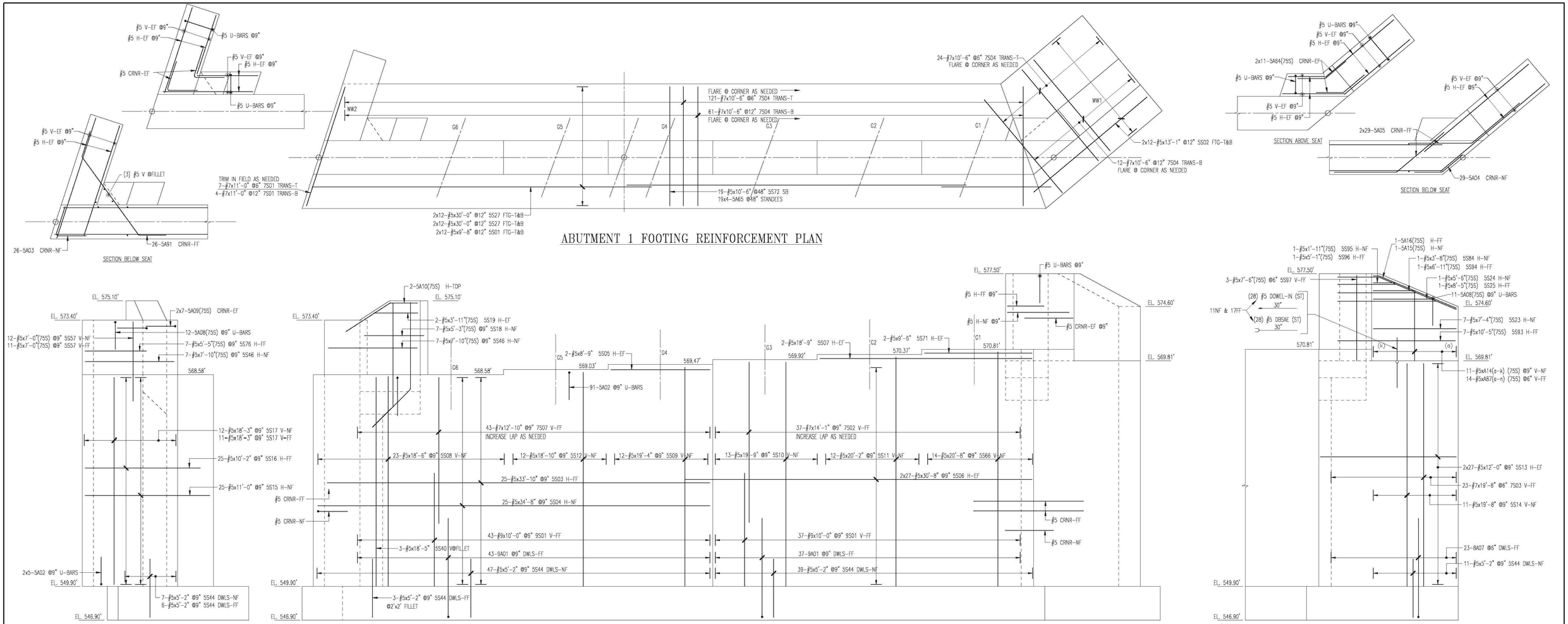


## ABUTMENT 1 FOOTING REINFORCEMENT PLAN




## WINGWALL 2 (WW2) ELEVATION

## ABUTMENT 1 ELEVATION

## WINGWALL 1 (WW1) ELEVATION

NOTE: ALL DOWEL BAR SUBS NOT INCLUDED IN THE BAR SCHEDULES DUE TO NOT BEING A "LIVE BAR" IN REBARCAD---THUS, THEY ARE CALLED OUT, QUANTITY, SIZES AND LENGTHS ON APPROPRIATE ELEVATIONS

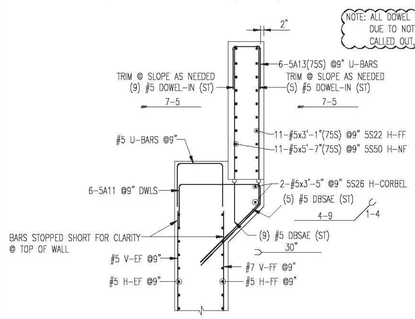


CHEEKWALL @ WW1 SECTION

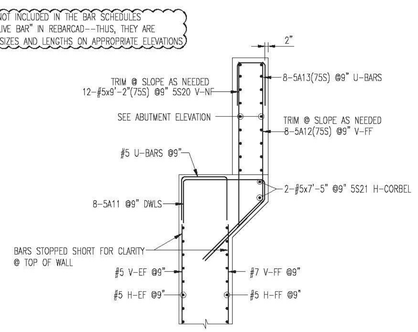


CHEEKWALL @ WW2 SECTION

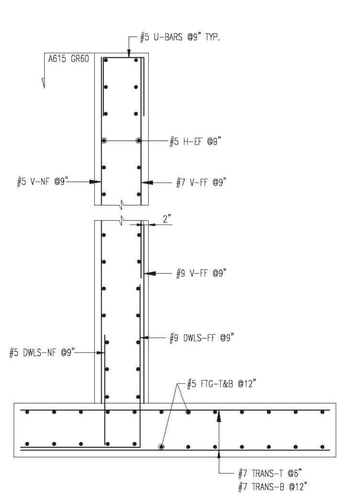


ABUTMENT WALL REINF. SECTION

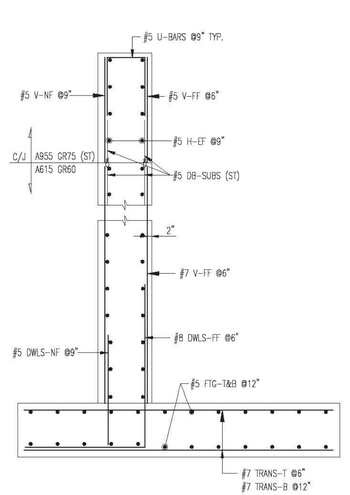


WINGWALL 1 REINF. SECTION

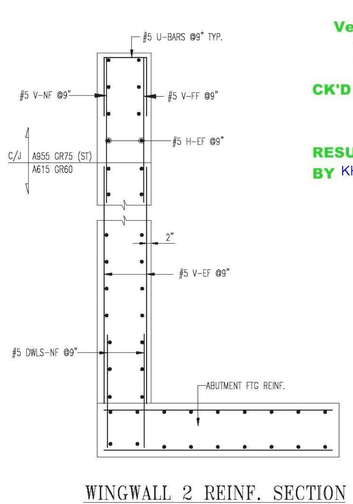


WINGWALL 2 REINF. SECTION

ALL MATERIAL ON THIS DRAWING SHALL BE AASHTO M31 U.N.O.

ALL MATERIAL ON THIS DRAWING NOTED AS (75S) SHALL BE ASTM "ASTM A955" STAINLESS STEEL

**LAP CHART-U.N.O.**

| SIZE | TOP BARS ★ | OTHER BARS |
|---|---|---|
| #11 | | |
| #10 | | |
| #9 | | |
| #8 | 54" | 54" |
| #7 | 41" | 41" |
| #6 | 31" | 31" |
| #5 | 26" | 26" |
| #4 | | |
| #3 | | |

★ -Top bars are horiz. bars with more than 12" of concrete cast below the bars.

SEE SHEET R06S FOR BAR LISTS
3" CLR COVER U.N.O.

Vermont Agency of Transportation

RECEIVED

CK'D BY RK/GL OK'D BY WL

March 9, 2015

RESUBMIT NO Approved

BY KH DATE 3-12-2015

| No. | Description | Date | By |
|---|---|---|---|
| 2 | FINAL APPROVAL PRINT | 03/09/15 | CPS |
| 1 | APPROVAL PRINT | 02/13/15 | CPS |

Revisions and Issue Record

The full intent and purpose of this drawing is the placing of reinforcing steel bars ONLY. It is NOT to be used as a means of communication between the Architect, Engineer, Contractor or any other Sub-trades.

THIS DRAWING IS NOT TO BE SCALED.

HarrisRebar Barker Steel — National Strength. Local Service.

DETAILED AT: CANAAN NEW HAMPSHIRE

Project: BRIDGE 43 S REPLACEMENT I-91 HARTFORD VT

Drawing: I-91 SOUTHBOUND ABUTMENT 1 W/ WINGWALLS 1&2

Customer: PCL CIVIL CONSTRUCTORS

Engineer: G. LAROCHE

Refer to Release:

| Date | Drawn | Chkd. | JOB No. | Dwg. No. |
|---|---|---|---|---|
| 02/06/15 | CPS | | 33505535 | R01S |

W:\csample\Projects\33505535\Placing Drawings\DWGs\R01S.dwg

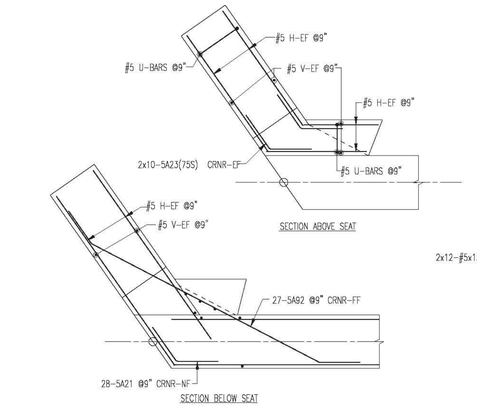


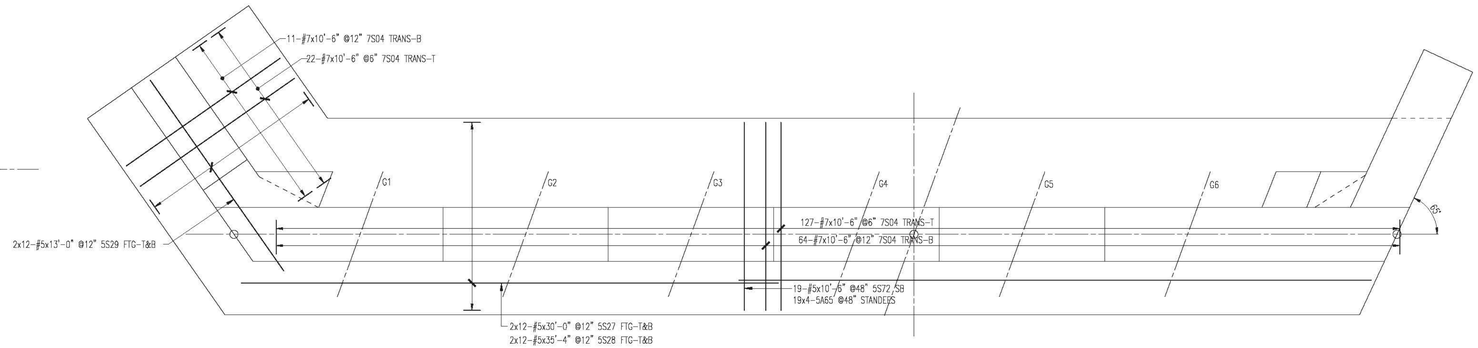


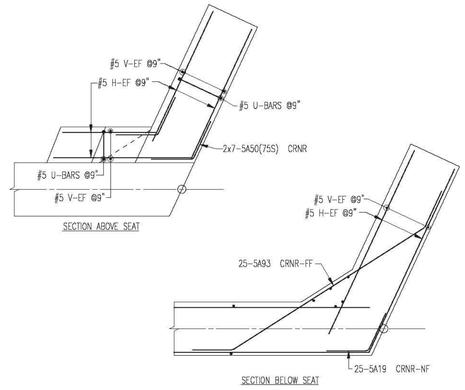


## ABUTMENT 2 FOOTING REINFORCEMENT PLAN

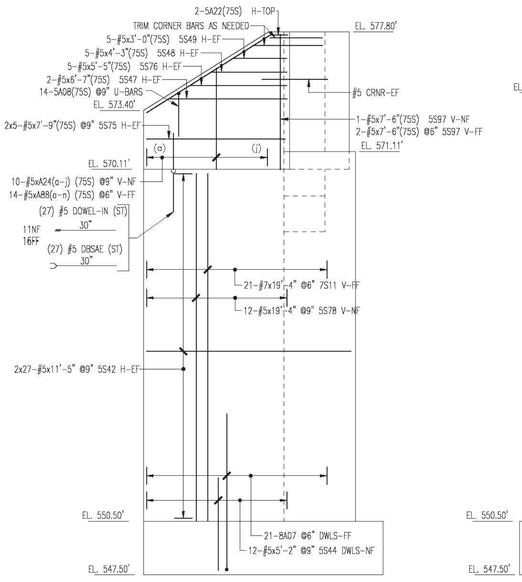


## WINGWALL 3 (WW3) ELEVATION

NOTE: ALL DOWEL BAR SUBS NOT INCLUDED IN THE BAR SCHEDULES DUE TO NOT BEING A "LIVE BAR" IN REBARCAD---THUS, THEY ARE CALLED OUT, QUANTITY, SIZES AND LENGTHS ON APPROPRIATE ELEVATIONS

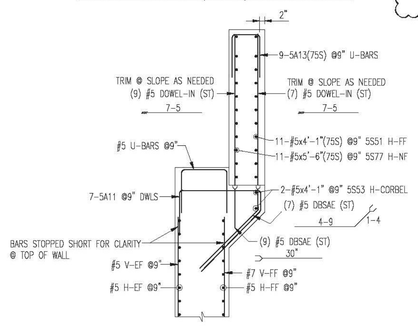


## CHEEKWALL @ WW3 SECTION

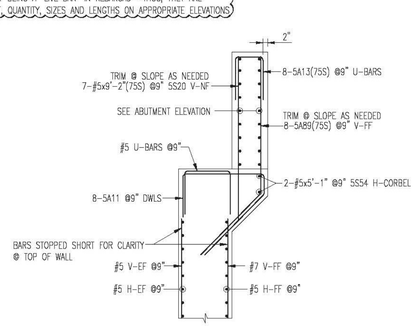


## CHEEKWALL @ WW4 SECTION

ALL MATERIAL ON THIS DRAWING SHALL BE AASHTO M31 U.N.O.

ALL MATERIAL ON THIS DRAWING NOTED AS (75S) SHALL BE ASTM "ASTM A955" STAINLESS STEEL

**LAP CHART-U.N.O.**

| SIZE | TOP BARS ★ | OTHER BARS |
|---|---|---|
| #11 | | |
| #10 | | |
| #9 | | |
| #8 | 54" | 54" |
| #7 | 41" | 41" |
| #6 | 31" | 31" |
| #5 | 26" | 26" |
| #4 | | |
| #3 | | |

★ -Top bars are horiz. bars with more than 12" of concrete cast below the bars.

SEE SHEET R06S FOR BAR LISTS
3" CLR COVER U.N.O.

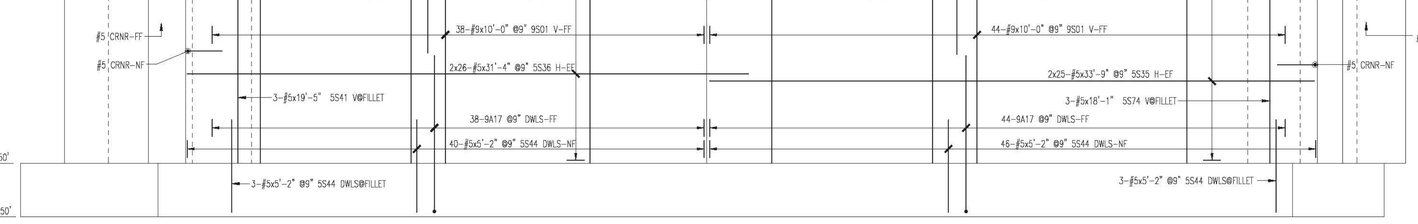


## ABUTMENT 2 ELEVATION

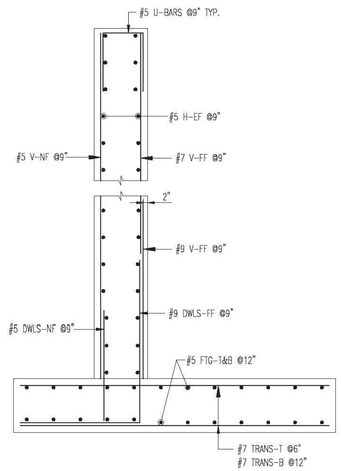


## ABUTMENT WALL REINFORCEMENT SECTION

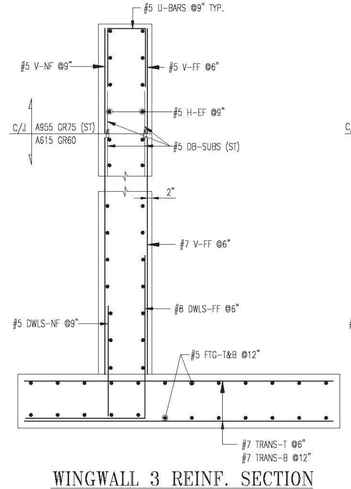


## WINGWALL 3 REINF. SECTION

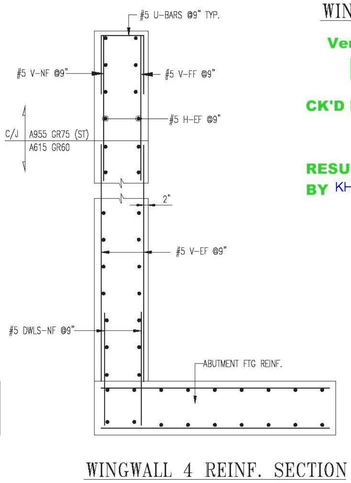


## WINGWALL 4 REINF. SECTION

## WINGWALL 4 (WW4) ELEVATION




Vermont Agency of Transportation

RECEIVED

CK'D BY RK/GL OK'D BY WL

March 9, 2015

RESUBMIT NO Approved

BY KH DATE 3-12-2015

| No. | Description | Date | By |
|---|---|---|---|
| 2 | FINAL APPROVAL PRINT | 03/09/15 | CPS |
| 1 | APPROVAL PRINT | 02/13/15 | CPS |

Revisions and Issue Record

The full intent and purpose of this drawing is the placing of reinforcing steel bars ONLY. It is NOT to be used as a means of communication between the Architect, Engineer, Contractor or any other Sub-trades.

THIS DRAWING IS NOT TO BE SCALED.

HarrisRebar Barker Steel — National Strength. Local Service.

DETAILED AT: CANAAN NEW HAMPSHIRE

Project: BRIDGE 43 S REPLACEMENT I-91 HARTFORD VT

Drawing: I-91 SOUTHBOUND ABUTMENT 2 W/ WINGWALLS 3&4

Customer: PCL CIVIL CONSTRUCTORS

Engineer: G LAROCHE

Refer to Release:

| Date | Drawn | Chkd. | JOB No. | Dwg. No. |
|---|---|---|---|---|
| 02/06/15 | CPS | | 33505535 | R02S |

W:\csample\Projects\33505535\Placing Drawings\DWGs\R01S.dwg

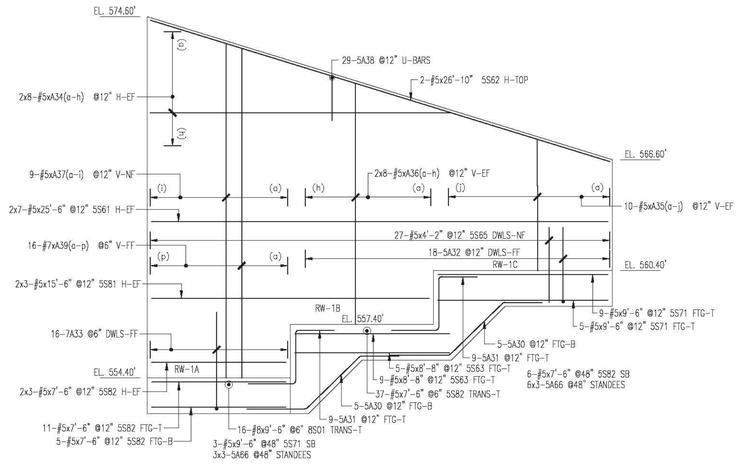


RETAINING WALL 1 (RW1) ELEVATION

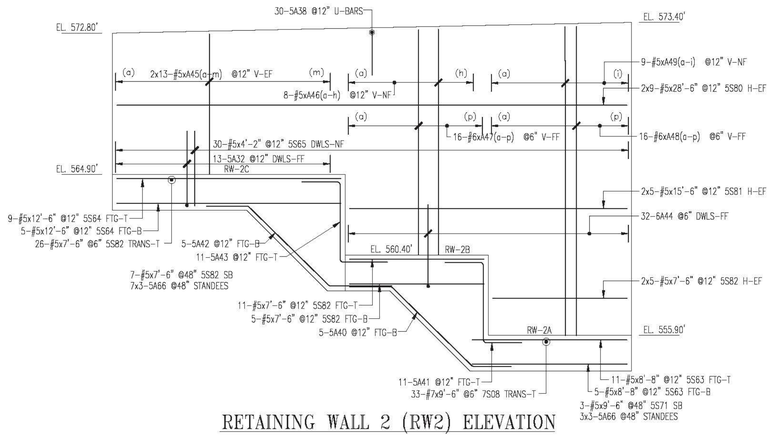


RETAINING WALL 2 (RW2) ELEVATION

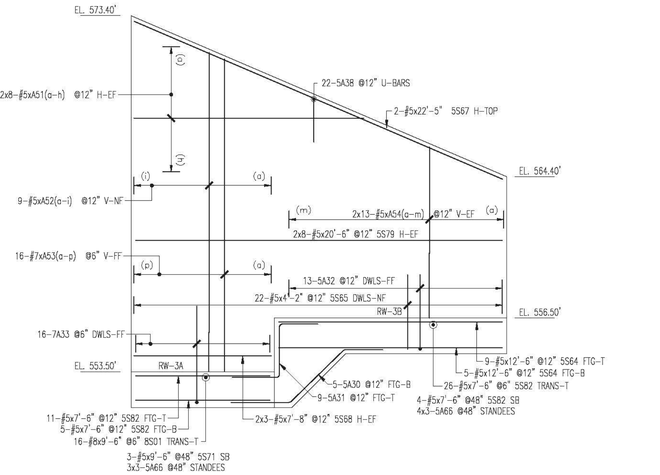


RETAINING WALL 3 (RW3) ELEVATION

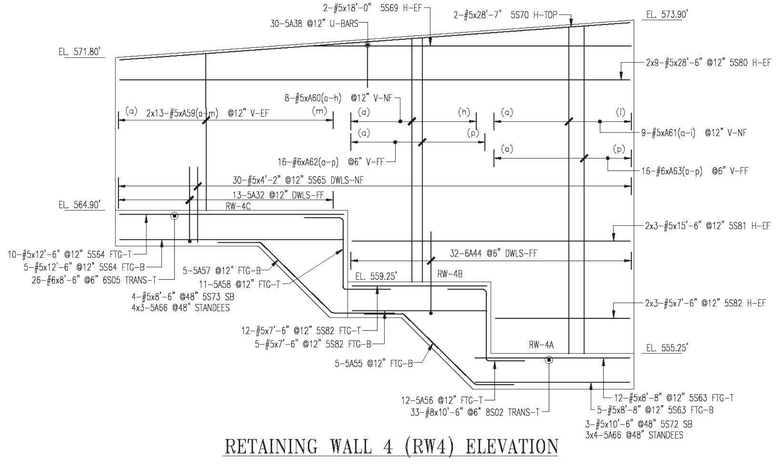


RETAINING WALL 4 (RW4) ELEVATION

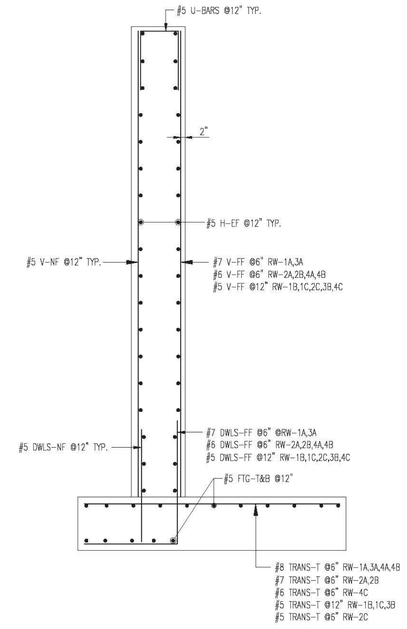


TYYPICAL RETAINING WALL REINFORCEMENT SECTION

| LAP CHART-U.N.O. | | |
|---|---|---|
| #11 | | |
| #10 | | |
| #9 | | |
| #8 | 54" | 54" |
| #7 | 41" | 41" |
| #6 | 31" | 31" |
| #5 | 26" | 26" |
| #4 | | |
| #3 | | |
| SIZE | TOP BARS ★ | OTHER BARS |

★ -Top bars are horiz. bars with more than 12" of concrete cast below the bars.

SEE SHEET R06S FOR BAR LISTS
3" CLR COVER U.N.O.

ALL MATERIAL ON THIS DRAWING SHALL BE AASHTO M31 U.N.O.

Vermont Agency of Transportation
RECEIVED
CK'D BY RK/GL OK'D BY WL
March 9, 2015
RESUBMIT NO Approved
BY KH DATE 3-12-2015

| No. | Description | Date | By |
|---|---|---|---|
| 2 | FINAL APPROVAL PRINT | 03/09/15 | CPS |
| 1 | APPROVAL PRINT | 02/13/15 | CPS |

Revisions and Issue Record

The full intent and purpose of this drawing is the placing of reinforcing steel bars ONLY. It is NOT to be used as a means of communication between the Architect, Engineer, Contractor or any other Sub-trades.

THIS DRAWING IS NOT TO BE SCALED.

HarrisRebar Barker Steel
National Strength. Local Service.

DETAILED AT:
CANAAN
NEW HAMPSHIRE

Project: BRIDGE 43 S REPLACEMENT
I-91 HARTFORD VT

Drawing: I-91 SOUTHBOUND
RETAINING WALLS 1-4

Customer: PCL CIVIL CONSTRUCTORS

Engineer: G LAROCHE

Refer to Release:

| Date | Drawn | Chkd. | JOB No. | Dwg. No. |
|---|---|---|---|---|
| 02/09/15 | CPS | | 33505535 | R03S |

W:\csample\Projects\33505535\Placing Drawings\DWGs\R01S.dwg

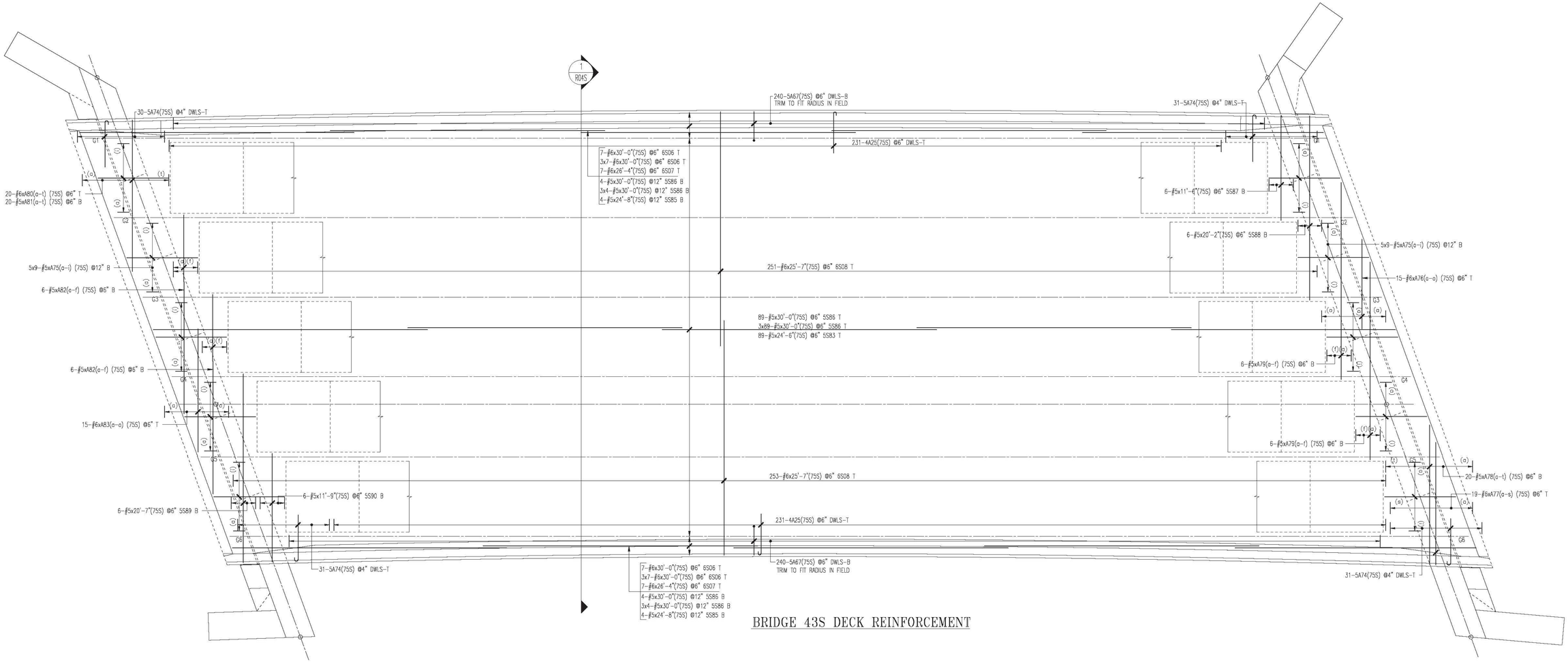


## BRIDGE 43S DECK REINFORCEMENT

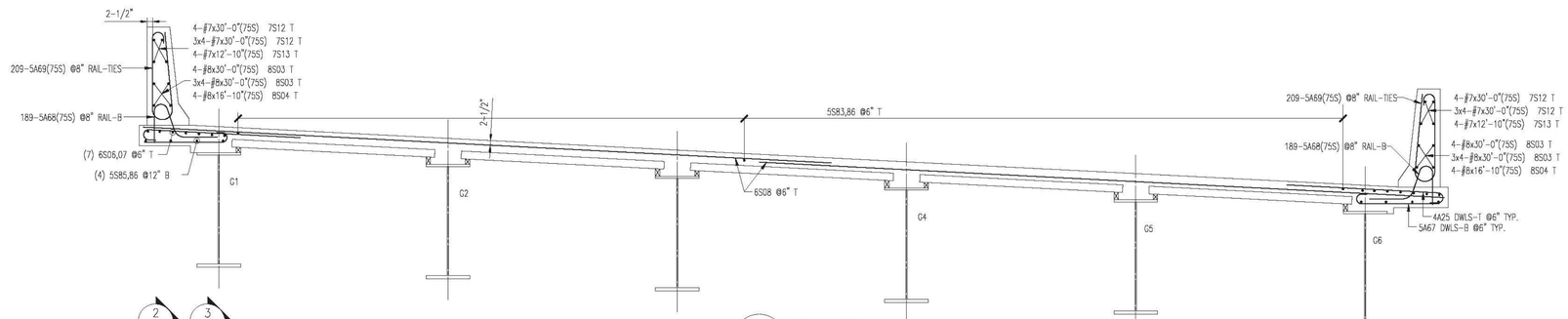


1 R04S SECTION
SCALE: N.T.S.

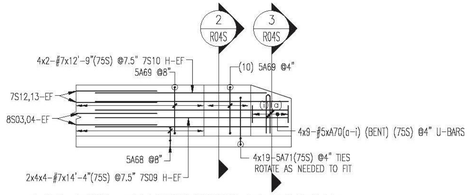


## RAIL END TRANSITIONS ELEVATION

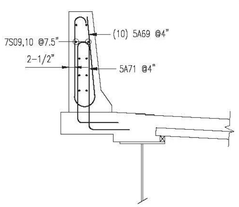


2 R04S SECTION
SCALE: N.T.S.

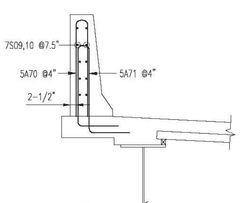


3 R04S SECTION
SCALE: N.T.S.

## LAP CHART-U.N.O.

| | | |
|---|---|---|
| #11 | | |
| #10 | | |
| #9 | | |
| #8 | 54" | 54" |
| #7 | 41" | 41" |
| #6 | 31" | 31" |
| #5 | 26" | 26" |
| #4 | | |
| #3 | | |
| SIZE | TOP BARS ★ | OTHER BARS |

★ -Top bars are horiz. bars with more than 12" of concrete cast below the bars.

SEE SHEET R06S FOR BAR LISTS
3" CLR COVER U.N.O.

ALL MATERIAL ON THIS DRAWING NOTED AS (75S) SHALL BE ASTM "ASTM A955" STAINLESS STEEL

| No. | Description | Date | By |
|---|---|---|---|
| | | | |
| | | | |
| | | | |
| 2 | FINAL APPROVAL PRINT | 03/09/15 | CPS |
| 1 | APPROVAL PRINT | 02/13/15 | CPS |

Revisions and Issue Record

The full intent and purpose of this drawing is the placing of reinforcing steel bars ONLY. It is NOT to be used as a means of communication between the Architect, Engineer, Contractor or any other Sub-trades.

THIS DRAWING IS NOT TO BE SCALED.

HarrisRebar Barker Steel
National Strength. Local Service.

DETAILED AT:
CANAAN
NEW HAMPSHIRE

Project: BRIDGE 43 S REPLACEMENT
I-91 HARTFORD VT

Drawing: I-91 SOUTHBOUND
DECK REINFORCEMENT

Customer: PCL CIVIL CONSTRUCTORS

Engineer: G LAROCHE

Refer to Release:

| Date | Drawn | Chkd. | JOB No. | Dwg. No. |
|---|---|---|---|---|
| 02/09/15 | CPS | | 33505535 | R04S |

Vermont Agency of Transportation
RECEIVED
CK'D BY RK/GL OK'D BY WL
March 9, 2015
RESUBMIT NO Approved
BY KH DATE 3-12-2015

W:\csample\Projects\33505535\Placing Drawings\DWGs\R01S.dwg

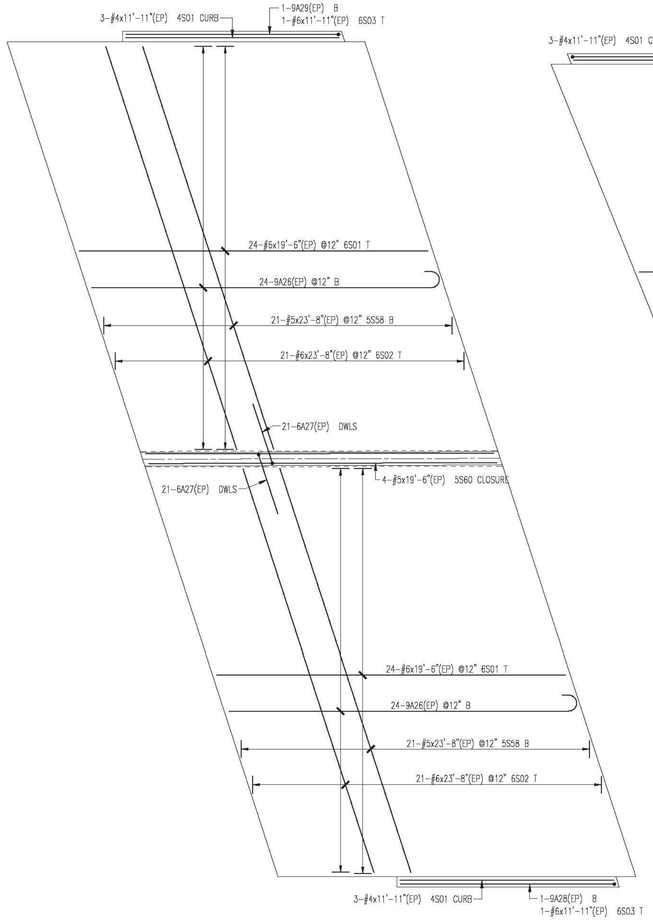


ABUTMENT 1 APPROACH SLAB

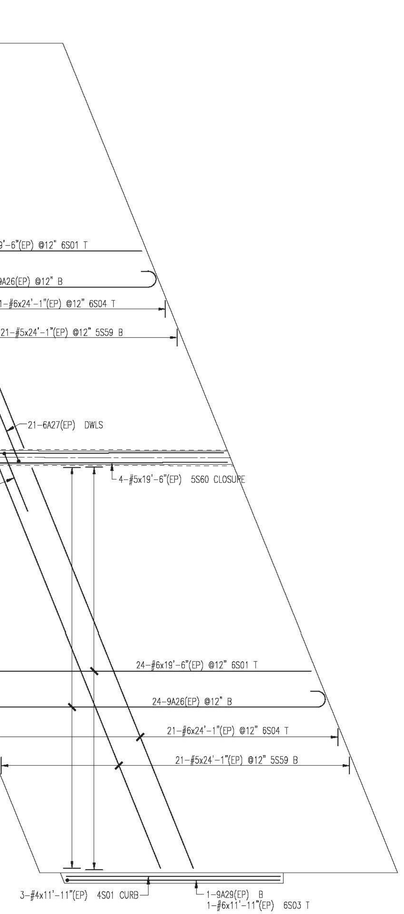


ABUTMENT 2 APPROACH SLAB

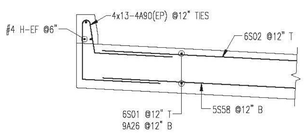


TYPICAL APPROACH SLAB @ CURB

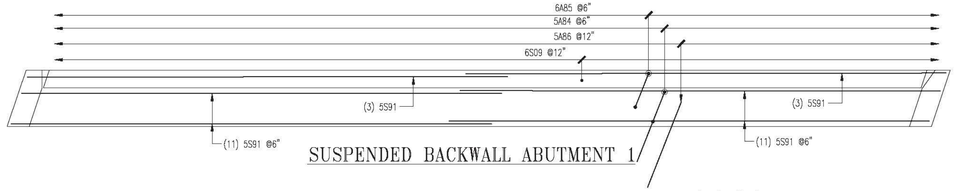


SUSPENDED BACKWALL ABUTMENT 1

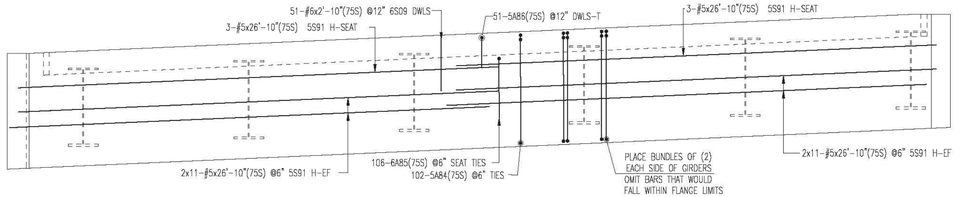


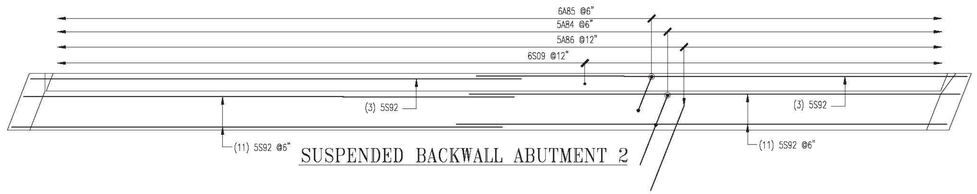


SUSPENDED BACKWALL ABUTMENT 2

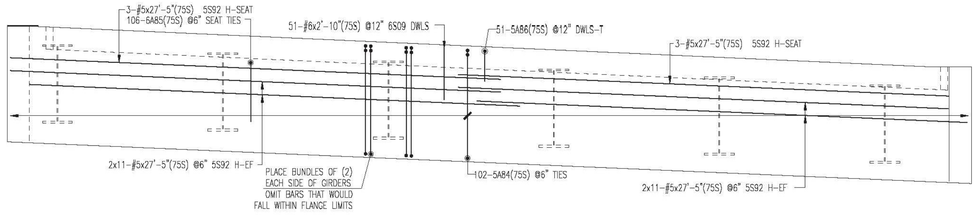


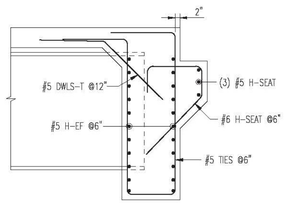


TYPICAL SUSPENDED BACKWALL SECTION

ALL MATERIAL NOTED AS (75S) SHALL BE "ASTM A955" STAINLESS STEEL

ALL MATERIAL NOTED AS "EP" SHALL BE ASTM A1055 GRADE 60 "DUAL COATED"

SEE SHEET R06S FOR BAR LISTS
3" CLR COVER U.N.O.

**LAP CHART-U.N.O.**

| SIZE | TOP BARS ★ | OTHER BARS |
|---|---|---|
| #11 | | |
| #10 | | |
| #9 | | |
| #8 | 54" | 54" |
| #7 | 41" | 41" |
| #6 | 31" | 31" |
| #5 | 26" | 26" |
| #4 | | |
| #3 | | |

★ -Top bars are horiz. bars with more than 12" of concrete cast below the bars.

Vermont Agency of Transportation

**RECEIVED**

CK'D BY RK/GL OK'D BY WL

March 9, 2015

RESUBMIT NO Approved

BY KH DATE 3-12-2015

| No. | Description | Date | By |
|---|---|---|---|
| 2 | FINAL APPROVAL PRINT | 03/09/15 | CPS |
| 1 | APPROVAL PRINT | 02/13/15 | CPS |

Revisions and Issue Record

The full intent and purpose of this drawing is the placing of reinforcing steel bars ONLY. It is NOT to be used as a means of communication between the Architect, Engineer, Contractor or any other Sub-trades.

THIS DRAWING IS NOT TO BE SCALED.

HarrisRebar Barker Steel — National Strength. Local Service.

DETAILED AT: CANAAN NEW HAMPSHIRE

Project: BRIDGE 43 S REPLACEMENT I-91 HARTFORD VT

Drawing: I-91 SOUTHBOUND APPROACH SLABS AND SUSPENDED BACKWALLS

Customer: PCL CIVIL CONSTRUCTORS

Engineer: G LAROCHE

Refer to Release:

| Date | Drawn | Chkd. | JOB No. | Dwg. No. |
|---|---|---|---|---|
| 02/09/15 | CPS | | 33505535 | R05S |

W:\csample\Projects\33505535\Placing Drawings\DWGs\R01S.dwg

Drawing Sheet : R01S

BAR LIST

| | Bar Mark | Qty | Size | Total Length | Type | 'A' | 'B' | 'C' | 'D' | 'E' | 'F' | 'G' | 'H' | 'J' | 'K' | 'O' | 'R' |
|---|---|---|---|---|---|---|---|---|---|---|---|---|---|---|---|---|---|
| 75S | A14a | 1 | #5 | 4'-7" | | | 4'-7" | | | | | | | | | | |
| | Varies To | | | | | | | | | | | | | | | | |
| 75S | A14k | 1 | #5 | 7'-5" | | | 7'-5" | | | | | | | | | | |
| 75S | SA08 | 23 | #5 | 7'-5" | 17 | | 2'-5" | 2'-7" | 2'-5" | | | | | | | | |
| 75S | SA09 | 14 | #5 | 5'-4" | H91 | | 2'-8 K" | 2'-8" | | | | | | | 2'-7 K" | | 9 K" |
| 75S | SA10 | 2 | #5 | 7'-1" | 3 | | 2'-5" | 4'-8" | | | | | | | 2'-7" | | 3'-10 K" 6'-3 K" |
| 75S | SA12 | 8 | #5 | 12'-5" | 3 | | 7'-8" | 4'-9" | | | | | | | 3'-4 K" | | 3'-3 K" 10'-11 K" |
| 75S | SA13 | 14 | #5 | 6'-5" | 17 | | 2'-5" | 1'-7" | 2'-5" | | | | | | | | |
| 75S | SA15 | 1 | #5 | 11'-K" | 3 | | 7'-5 K" | 3'-7 K" | | | | | | | 1'-5 K" | | 3'-4" 10'-9 K" |
| 75S | SA16 | 1 | #5 | 7'-11" | 3 | | 7'-5 K" | 5 K" | | | | | | | 2 K" | | 5" 7'-10 K" |
| 75S | SA64 | 22 | #5 | 4'-10" | 3 | | 2'-5" | 2'-5" | | | | | | | 1'-7" | | 1'-9 K" 4'-2 K" |
| 75S | SS18 | 7 | #5 | 5'-3" | | | 5'-3" | | | | | | | | | | |
| 75S | SS19 | 2 | #5 | 3'-11" | | | 3'-11" | | | | | | | | | | |
| 75S | SS20 | 12 | #5 | 9'-2" | | | 9'-2" | | | | | | | | | | |
| 75S | SS22 | 11 | #5 | 3'-1" | | | 3'-1" | | | | | | | | | | |
| 75S | SS23 | 7 | #5 | 7'-4" | | | 7'-4" | | | | | | | | | | |
| 75S | SS24 | 1 | #5 | 5'-6" | | | 5'-6" | | | | | | | | | | |
| 75S | SS25 | 1 | #5 | 8'-5" | | | 8'-5" | | | | | | | | | | |
| 75S | SS46 | 14 | #5 | 7'-10" | | | 7'-10" | | | | | | | | | | |
| 75S | SS50 | 11 | #5 | 5'-7" | | | 5'-7" | | | | | | | | | | |
| 75S | SS57 | 23 | #5 | 7'-0" | | | 7'-0" | | | | | | | | | | |
| 75S | SS76 | 7 | #5 | 5'-5" | | | 5'-5" | | | | | | | | | | |
| 75S | SS84 | 1 | #5 | 3'-8" | | | 3'-8" | | | | | | | | | | |
| 75S | SS83 | 7 | #5 | 10'-5" | | | 10'-5" | | | | | | | | | | |
| 75S | SS94 | 1 | #5 | 6'-11" | | | 6'-11" | | | | | | | | | | |
| | SA02 | 101 | #5 | 7'-5" | 17 | | 2'-5" | 2'-7" | 2'-5" | | | | | | | | |
| | SA03 | 28 | #5 | 5'-4" | H91 | | 2'-8 K" | 2'-8" | | | | | | | 2'-7 K" | | 9 K" |
| | SA04 | 29 | #5 | 4'-10" | 3 | | 2'-5" | 2'-5" | | | | | | | 1'-7" | | 1'-9 K" 4'-2 K" |
| | SA05 | 58 | #5 | 11'-0" | 3 | | 5'-6" | 5'-6 K" | | | | | | | 3'-7" | | 4'-2 K" 9'-8 K" |
| | SA11 | 14 | #5 | 12'-11" | 16 | 2'-5" | 4'-7" | 1'-7" | 4'-9" | | | | | | 3'-4 K" | | 3'-4 K" 4'-6 K" |
| | SA65 | 78 | #5 | 8'-4 K" | 25 | | 1'-6" | 2'-3 K" | 10" | 2'-3 K" | 1'-6" | | | | 2'-2 K" | | 1'-1 K" |
| | SS01 | 24 | #5 | 5'-8" | | | 5'-8" | | | | | | | | | | |
| | SS02 | 24 | #5 | 13'-1" | | | 13'-1" | | | | | | | | | | |
| | SS03 | 25 | #5 | 33'-10" | | | 33'-10" | | | | | | | | | | |
| | SS24 | 25 | #5 | 34'-8" | | | 34'-8" | | | | | | | | | | |
| | SS25 | 2 | #5 | 8'-8" | | | 8'-8" | | | | | | | | | | |
| | SS26 | 54 | #5 | 30'-8" | | | 30'-8" | | | | | | | | | | |
| | SS27 | 2 | #5 | 18'-9" | | | 18'-9" | | | | | | | | | | |
| | SS28 | 23 | #5 | 18'-6" | | | 18'-6" | | | | | | | | | | |
| | SS29 | 12 | #5 | 19'-4" | | | 19'-4" | | | | | | | | | | |
| | SS30 | 13 | #5 | 19'-9" | | | 19'-9" | | | | | | | | | | |
| | SS31 | 12 | #5 | 20'-2" | | | 20'-2" | | | | | | | | | | |
| | SS12 | 12 | #5 | 18'-10" | | | 18'-10" | | | | | | | | | | |
| | SS13 | 54 | #5 | 12'-0" | | | 12'-0" | | | | | | | | | | |
| | SS14 | 11 | #5 | 19'-8" | | | 19'-8" | | | | | | | | | | |
| | SS15 | 25 | #5 | 11'-0" | | | 11'-0" | | | | | | | | | | |
| | SS16 | 25 | #5 | 10'-2" | | | 10'-2" | | | | | | | | | | |
| | SS17 | 23 | #5 | 18'-3" | | | 18'-3" | | | | | | | | | | |
| | SS21 | 2 | #5 | 7'-5" | | | 7'-5" | | | | | | | | | | |
| | SS28 | 2 | #5 | 3'-5" | | | 3'-5" | | | | | | | | | | |
| | SS27 | 48 | #5 | 30'-0" | | | 30'-0" | | | | | | | | | | |
| | SS40 | 3 | #5 | 18'-5" | | | 18'-5" | | | | | | | | | | |
| | SS44 | 113 | #5 | 5'-2" | | | 5'-2" | | | | | | | | | | |
| | SS85 | 14 | #5 | 20'-8" | | | 20'-8" | | | | | | | | | | |
| | SS71 | 2 | #5 | 9'-6" | | | 9'-6" | | | | | | | | | | |
| | SS72 | 19 | #5 | 10'-6" | | | 10'-6" | | | | | | | | | | |
| | 7S01 | 11 | #7 | 11'-0" | | | 11'-0" | | | | | | | | | | |
| | 7S02 | 37 | #7 | 14'-1" | | | 14'-1" | | | | | | | | | | |
| | 7S03 | 23 | #7 | 19'-8" | | | 19'-8" | | | | | | | | | | |
| | 7S04 | 218 | #7 | 10'-6" | | | 10'-6" | | | | | | | | | | |
| | 7S07 | 43 | #7 | 12'-10" | | | 12'-10" | | | | | | | | | | |
| | BA07 | 23 | #8 | 14'-3" | 17 | | 5'-6" | 8'-9" | | | | | | | | | |
| | SA01 | 80 | #3 | 14'-4" | 17 | | 5'-7" | 8'-9" | | | | | | | | | |
| | SS21 | 80 | #3 | 10'-0" | | | 10'-0" | | | | | | | | | | |
| 75S | SS93 | 1 | #5 | 1'-11" | | | 1'-11" | | | | | | | | | | |
| 75S | SS96 | 1 | #5 | 5'-1" | | | 5'-1" | | | | | | | | | | |
| 75S | SS97 | 3 | #5 | 7'-6" | | | 7'-6" | | | | | | | | | | |
| 75S | A87a | 1 | #5 | 4'-8" | | | 4'-8" | | | | | | | | | | |
| | Varies To | | | | | | | | | | | | | | | | |
| 75S | A87n | 1 | #5 | 7'-4" | | | 7'-4" | | | | | | | | | | |
| | SA91 | 28 | #5 | 13'-5" | 3 | | | 2'-5" | 8'-7" | 2'-5" | | | | 1'-11 K" | | 1'-4 K" | 11'-4" |

# ABUTMENT 1 AND WINGWALLS 1 & 2

Drawing Sheet : R02SS

BAR LIST

| | Bar Mark | Qty | Size | Total Length | Type | 'A' | 'B' | 'C' | 'D' | 'E' | 'F' | 'G' | 'H' | 'J' | 'K' | 'O' | 'R' |
|---|---|---|---|---|---|---|---|---|---|---|---|---|---|---|---|---|---|
| EP | 4S21 | 12 | #4 | 11'-11" | | | 11'-11" | | | | | | | | | | |
| 75S | SA84 | 204 | #5 | 16'-7" | H66 | | 7'-5" | 8'-1" | 1'-10" | 5'-10" | 2'-5" | | | | | | |
| 75S | SA86 | 102 | #5 | 5'-8" | 3 | | 3'-1" | 2'-5" | | | | | | | 1'-8 K" | | 1'-8 K" 4'-9 K" |
| EP | SS58 | 42 | #5 | 23'-8" | | | 23'-8" | | | | | | | | | | |
| EP | SS56 | 42 | #5 | 24'-1" | | | 24'-1" | | | | | | | | | | |
| EP | SS60 | 8 | #5 | 19'-6" | | | 19'-6" | | | | | | | | | | |
| 75S | SS91 | 50 | #5 | 26'-10" | | | 26'-10" | | | | | | | | | | |
| 75S | SS92 | 50 | #5 | 27'-5" | | | 27'-5" | | | | | | | | | | |
| EP | 6A27 | 84 | #6 | 7'-2 K" | S11 | | 7'-2 K" | | | | | | | | | | |
| 75S | 6A85 | 212 | #6 | 7'-3" | 16 | 1'-0" | 2'-1" | 1'-2" | 3'-0" | | | | | | 2'-1 K" | | 2'-1 K" 3'-3 K" |
| EP | 6S01 | 98 | #6 | 19'-6" | | | 19'-6" | | | | | | | | | | |
| EP | 6S02 | 42 | #6 | 23'-8" | | | 23'-8" | | | | | | | | | | |
| EP | 6S03 | 4 | #6 | 11'-11" | | | 11'-11" | | | | | | | | | | |
| EP | 6S04 | 42 | #6 | 24'-1" | | | 24'-1" | | | | | | | | | | |
| 75S | 6S05 | 102 | #6 | 2'-10" | | | 2'-10" | | | | | | | | | | |
| EP | 9A26 | 98 | #9 | 20'-8 K" | 1 | 1'-3" | 19'-5 K" | | | | | | | | | | |
| EP | 9A28 | 2 | #9 | 13'-3" | 1 | 1'-3" | 12'-0" | | | | | | | | 11 K" | | |
| EP | 9A29 | 2 | #9 | 13'-3" | 1 | 1'-3" | 11'-11" | | | | | | | | 11 K" | | |
| EP | 4A90 | 52 | #4 | 7'-0" | H4 | | 2'-2" | 1'-6 K" | 3 K" | 10" | 2'-2" | | | | | | 1 K" |

# APPROACH SLABS & SUSPENDED BACKWALLS

Drawing Sheet : R04S

BAR LIST

| | Bar Mark | Qty | Size | Total Length | Type | 'A' | 'B' | 'C' | 'D' | 'E' | 'F' | 'G' | 'H' | 'J' | 'K' | 'O' | 'R' |
|---|---|---|---|---|---|---|---|---|---|---|---|---|---|---|---|---|---|
| 75S | 4A25 | 452 | #4 | 5'-0" | 1 | 5" | 4'-8" | | | | | | | 4" | | | |
| 75S | A70a | 4 | #5 | 5'-8" | 17 | | 2'-7" | 6" | 2'-7" | | | | | | | | |
| | Varies To | | | | | | | | | | | | | | | | |
| 75S | A70 | 4 | #5 | 7'-6" | 17 | | 3'-8" | 6" | 3'-6" | | | | | | | | |
| 75S | A70n | 10 | #5 | 6'-5" | | | 6'-5" | | | | | | | | | | |
| | Varies To | | | | | | | | | | | | | | | | |
| 75S | A75l | 10 | #5 | 9'-1" | | | 9'-1" | | | | | | | | | | |
| 75S | A78a | 1 | #5 | 2'-5" | | | 2'-5" | | | | | | | | | | |
| | Varies To | | | | | | | | | | | | | | | | |
| 75S | A78l | 1 | #5 | 28'-6" | | | 28'-8" | | | | | | | | | | |
| 75S | A79a | 2 | #5 | 11'-9" | | | 11'-9" | | | | | | | | | | |
| | Varies To | | | | | | | | | | | | | | | | |
| 75S | A79f | 2 | #5 | 19'-1" | | | 19'-1" | | | | | | | | | | |
| 75S | A81a | 1 | #5 | 1'-6" | | | 1'-8" | | | | | | | | | | |
| | Varies To | | | | | | | | | | | | | | | | |
| 75S | A81l | 1 | #5 | 27'-8" | | | 27'-8" | | | | | | | | | | |
| 75S | A82a | 2 | #5 | 18'-7" | | | 18'-7" | | | | | | | | | | |
| | Varies To | | | | | | | | | | | | | | | | |
| 75S | A82f | 2 | #5 | 25'-11" | | | 25'-11" | | | | | | | | | | |
| 75S | SA67 | 480 | #5 | 3'-5" | 1 | 7" | 3'-2" | | | | | | | | | | |
| 75S | SA68 | 378 | #5 | 4'-10" | H1 | | 1'-3" | 8 K" | 1'-1" | 6 K" | 1'-3" | | | | 5" | | |
| 75S | SA69 | 418 | #5 | 7'-9" | H2 | | 10 K" | 2'-9" | 1'-2 K" | 2'-11" | | | | | 2 K" | | 5 K" 4 K" |
| 75S | SA71 | 76 | #5 | 9'-7" | H3 | | 1'-8" | 3'-2 K" | 5" | 2'-11 K" | 1'-4" | | | | | | |
| 75S | SA74 | 123 | #5 | 5'-8" | 1 | 7" | 5'-1" | | | | | | | | 5" | | |
| 75S | SS83 | 88 | #5 | 24'-6" | | | 24'-6" | | | | | | | | | | |
| 75S | SS85 | 8 | #5 | 24'-8" | | | 24'-8" | | | | | | | | | | |
| 75S | SS86 | 388 | #5 | 30'-0" | | | 30'-0" | | | | | | | | | | |
| 75S | SS87 | 6 | #5 | 11'-6" | | | 11'-6" | | | | | | | | | | |
| 75S | SS88 | 6 | #5 | 20'-2" | | | 20'-2" | | | | | | | | | | |
| 75S | SS89 | 6 | #5 | 20'-7" | | | 20'-7" | | | | | | | | | | |
| 75S | SS93 | 6 | #5 | 11'-9" | | | 11'-9" | | | | | | | | | | |
| 75S | SS95 | 1 | #5 | 2'-5" | | | 2'-8" | | | | | | | | | | |
| | Varies To | | | | | | | | | | | | | | | | |
| 75S | A78o | 1 | #6 | 21'-11" | | | 21'-11" | | | | | | | | | | |
| 75S | A77a | 1 | #6 | 2'-5" | | | 2'-5" | | | | | | | | | | |
| | Varies To | | | | | | | | | | | | | | | | |
| 75S | A77k | 1 | #6 | 26'-10" | | | 26'-10" | | | | | | | | | | |
| 75S | A80a | 1 | #6 | 1'-6" | | | 1'-8" | | | | | | | | | | |
| | Varies To | | | | | | | | | | | | | | | | |
| 75S | A80l | 1 | #6 | 27'-8" | | | 27'-8" | | | | | | | | | | |
| 75S | A83a | 1 | #6 | 3'-6" | | | 3'-5" | | | | | | | | | | |
| | Varies To | | | | | | | | | | | | | | | | |
| 75S | A83o | 1 | #6 | 22'-10" | | | 22'-10" | | | | | | | | | | |
| 75S | 6S05 | 56 | #6 | 30'-0" | | | 30'-0" | | | | | | | | | | |
| 75S | 6S07 | 14 | #6 | 26'-4" | | | 26'-4" | | | | | | | | | | |
| 75S | 6S08 | 504 | #6 | 25'-7" | | | 25'-7" | | | | | | | | | | |
| 75S | 7S09 | 32 | #7 | 14'-4" | | | 14'-4" | | | | | | | | | | |
| 75S | 7S10 | 8 | #7 | 12'-5" | | | 12'-9" | | | | | | | | | | |
| 75S | 7S12 | 32 | #7 | 30'-0" | | | 30'-0" | | | | | | | | | | |
| 75S | 7S13 | 8 | #7 | 12'-10" | | | 12'-10" | | | | | | | | | | |
| 75S | 8S03 | 32 | #8 | 30'-0" | | | 30'-0" | | | | | | | | | | |
| 75S | 8S04 | 8 | #8 | 16'-10" | | | 16'-10" | | | | | | | | | | |

# DECK AND RAILS

Drawing Sheet : R02S

BAR LIST

| | Bar Mark | Qty | Size | Total Length | Type | 'A' | 'B' | 'C' | 'D' | 'E' | 'F' | 'G' | 'H' | 'J' | 'K' | 'O' | 'R' |
|---|---|---|---|---|---|---|---|---|---|---|---|---|---|---|---|---|---|
| 75S | A24a | 1 | #5 | 3'-1" | | | 3'-1" | | | | | | | | | | |
| | Varies To | | | | | | | | | | | | | | | | |
| 75S | A24j | 1 | #5 | 7'-4" | | | 7'-4" | | | | | | | | | | |
| 75S | SA08 | 28 | #5 | 7'-5" | 17 | | 2'-5" | 2'-7" | 2'-5" | | | | | | | | |
| 75S | SA13 | 17 | #5 | 6'-5" | 17 | | 2'-5" | 1'-7" | 2'-5" | | | | | | | | |
| 75S | SA22 | 2 | #5 | 9'-1 K" | 3 | | 8'-1 K" | 1'-0" | | | | | | | | | |
| 75S | SA23 | 20 | #5 | 4'-8" | 3 | | 2'-4" | 2'-4" | | | | | | | 1'-11 K" | | 1'-3 K" 3'-7 K" |
| 75S | SA50 | 14 | #5 | 4'-8" | 3 | | 2'-4" | 2'-4" | | | | | | | 2'-1 K" | | 11 K" 3'-3 K" |
| 75S | SA73 | 2 | #5 | 6'-K" | 3 | | 3'-9 K" | 2'-3" | | | | | | | 1'-2 K" | | 1'-10 K" 5'-8 K" |
| 75S | SA89 | 8 | #5 | 12'-3 K" | 3 | | 7'-8" | 4'-9 K" | | | | | | | 3'-4 K" | | 3'-4 K" 11'-K" |
| 75S | SS20 | 7 | #5 | 9'-2" | | | 9'-2" | | | | | | | | | | |
| 75S | SS47 | 2 | #5 | 6'-7" | | | 6'-7" | | | | | | | | | | |
| 75S | SS48 | 5 | #5 | 4'-3" | | | 4'-3" | | | | | | | | | | |
| 75S | SS49 | 5 | #5 | 3'-0" | | | 3'-0" | | | | | | | | | | |
| 75S | SS51 | 11 | #5 | 4'-1" | | | 4'-1" | | | | | | | | | | |
| 75S | SS52 | 14 | #5 | 7'-11" | | | 7'-11" | | | | | | | | | | |
| 75S | SS55 | 7 | #5 | 7'-8" | | | 7'-8" | | | | | | | | | | |
| 75S | SS26 | 7 | #5 | 5'-0" | | | 5'-0" | | | | | | | | | | |
| 75S | SS57 | 24 | #5 | 7'-0" | | | 7'-0" | | | | | | | | | | |
| 75S | SS75 | 10 | #5 | 7'-9" | | | 7'-9" | | | | | | | | | | |
| 75S | SS76 | 5 | #5 | 5'-5" | | | 5'-5" | | | | | | | | | | |
| 75S | SS77 | 11 | #5 | 5'-6" | | | 5'-6" | | | | | | | | | | |
| 75S | SS84 | 2 | #5 | 3'-8" | | | 3'-8" | | | | | | | | | | |
| 75S | SS97 | 3 | #5 | 7'-6" | | | 7'-6" | | | | | | | | | | |
| | SA02 | 80 | #5 | 7'-5" | 17 | | 2'-5" | 2'-7" | 2'-5" | | | | | | | | |
| | SA11 | 15 | #5 | 12'-11" | 16 | 2'-5" | 4'-7" | 1'-7" | 4'-9" | | | | | | 3'-4 K" | | 3'-4 K" 4'-6 K" |
| | SA19 | 25 | #5 | 4'-8" | 3 | | 2'-4" | 2'-4" | | | | | | | 2'-1 K" | | 11 K" 3'-3 K" |
| | SA21 | 28 | #5 | 4'-8" | 3 | | 2'-4" | 2'-4" | | | | | | | 1'-11 K" | | 1'-3 K" 3'-7 K" |
| | SA65 | 78 | #5 | 8'-4 K" | 25 | | 1'-6" | 2'-3 K" | 10" | 2'-3 K" | 1'-6" | | | | 2'-2 K" | | 1'-1 K" |
| | SS27 | 24 | #5 | 30'-0" | | | 30'-0" | | | | | | | | | | |
| | SS28 | 24 | #5 | 30'-4" | | | 30'-4" | | | | | | | | | | |
| | SS29 | 24 | #5 | 13'-0" | | | 13'-0" | | | | | | | | | | |
| | SS30 | 12 | #5 | 18'-7" | | | 18'-7" | | | | | | | | | | |
| | SS31 | 13 | #5 | 19'-0" | | | 19'-0" | | | | | | | | | | |
| | SS32 | 13 | #5 | 19'-6" | | | 19'-6" | | | | | | | | | | |
| | SS33 | 13 | #5 | 20'-5" | | | 20'-5" | | | | | | | | | | |
| | SS34 | 12 | #5 | 19'-11" | | | 19'-11" | | | | | | | | | | |
| | SS35 | 50 | #5 | 33'-9" | | | 33'-9" | | | | | | | | | | |
| | SS36 | 52 | #5 | 31'-4" | | | 31'-4" | | | | | | | | | | |
| | SS37 | 2 | #5 | 8'-10" | | | 8'-10" | | | | | | | | | | |
| | SS38 | 2 | #5 | 28'-8" | | | 28'-8" | | | | | | | | | | |
| | SS39 | 2 | #5 | 10'-2" | | | 10'-2" | | | | | | | | | | |
| | SS41 | 3 | #5 | 19'-5" | | | 19'-5" | | | | | | | | | | |
| | SS42 | 54 | #5 | 11'-5" | | | 11'-5" | | | | | | | | | | |
| | SS43 | 50 | #5 | 11'-3" | | | 11'-3" | | | | | | | | | | |
| | SS44 | 125 | #5 | 5'-2" | | | 5'-2" | | | | | | | | | | |
| | SS45 | 28 | #5 | 18'-2" | | | 18'-2" | | | | | | | | | | |
| | SS53 | 2 | #5 | 4'-1" | | | 4'-1" | | | | | | | | | | |
| | SS54 | 2 | #5 | 5'-1" | | | 5'-1" | | | | | | | | | | |
| | SS72 | 19 | #5 | 10'-6" | | | 10'-6" | | | | | | | | | | |
| | SS74 | 24 | #5 | 18'-1" | | | 18'-1" | | | | | | | | | | |
| | SS78 | 12 | #5 | 19'-4" | | | 19'-4" | | | | | | | | | | |
| | 7S04 | 224 | #7 | 10'-6" | | | 10'-6" | | | | | | | | | | |
| | 7S05 | 38 | #7 | 13'-9" | | | 13'-9" | | | | | | | | | | |
| | 7S06 | 44 | #7 | 12'-6" | | | 12'-6" | | | | | | | | | | |
| | 7S11 | 21 | #7 | 19'-4" | | | 19'-4" | | | | | | | | | | |
| | BA07 | 21 | #8 | 14'-3" | 17 | | 5'-6" | 8'-9" | | | | | | | | | |
| | BA17 | 82 | #9 | 14'-3" | 17 | | 5'-6" | 8'-9" | | | | | | | | | |
| | SS01 | 82 | #9 | 10'-0" | | | 10'-0" | | | | | | | | | | |
| 75S | A88a | 1 | #5 | 3'-2" | | | 3'-2" | | | | | | | | | | |
| | Varies To | | | | | | | | | | | | | | | | |
| 75S | A88n | 1 | #5 | 7'-6" | | | 7'-6" | | | | | | | | | | |
| 75S | SA92 | 27 | #5 | 18'-10 K" | 3 | | | 2'-3" | 14'-4 K" | 2'-3" | | | | 1'-1" | | 1'-11 K" | 18'-4 K" |
| | SA93 | 25 | #5 | 17'-2 K" | 3 | | | 2'-3" | 12'-8 K" | 2'-3" | | | | 1'-3" | | 1'-10 K" | 16'-5 K" |

# ABUTMENT 2 AND WINGWALLS 3 & 4

MATERIAL/COATING CODE TO THE LEFT OF BAR MARK ADDED BY PCL

Drawing Sheet : R03S

BAR LIST

| | Bar Mark | Qty | Size | Total Length | Type | 'A' | 'B' | 'C' | 'D' | 'E' | 'F' | 'G' | 'H' | 'J' | 'K' | 'O' | 'R' |
|---|---|---|---|---|---|---|---|---|---|---|---|---|---|---|---|---|---|
| | A34a | 2 | #5 | 2'-0" | | | 2'-0" | | | | | | | | | | |
| | Varies To | | | | | | | | | | | | | | | | |
| | A34h | 2 | #5 | 22'-9" | | | 22'-9" | | | | | | | | | | |
| | A35a | 1 | #5 | 6'-0" | | | 6'-0" | | | | | | | | | | |
| | Varies To | | | | | | | | | | | | | | | | |
| | A35l | 1 | #5 | 8'-9" | | | 8'-9" | | | | | | | | | | |
| | A37a | 1 | #5 | 17'-6" | | | 17'-6" | | | | | | | | | | |
| | Varies To | | | | | | | | | | | | | | | | |
| | A37l | 1 | #5 | 19'-10" | | | 19'-10" | | | | | | | | | | |
| | A46a | 1 | #5 | 12'-5" | | | 12'-5" | | | | | | | | | | |
| | Varies To | | | | | | | | | | | | | | | | |
| | A48h | 1 | #5 | 12'-7" | | | 12'-7" | | | | | | | | | | |
| | A49a | 1 | #5 | 17'-1" | | | 17'-1" | | | | | | | | | | |
| | Varies To | | | | | | | | | | | | | | | | |
| | A49l | 1 | #5 | 17'-3" | | | 17'-3" | | | | | | | | | | |
| | A51a | 2 | #5 | 3'-2" | | | 3'-2" | | | | | | | | | | |
| | Varies To | | | | | | | | | | | | | | | | |
| | A51h | 2 | #5 | 19'-8" | | | 19'-8" | | | | | | | | | | |
| | A52a | 1 | #5 | 15'-4" | | | 16'-4" | | | | | | | | | | |
| | Varies To | | | | | | | | | | | | | | | | |
| | A52l | 1 | #5 | 19'-8" | | | 19'-8" | | | | | | | | | | |
| | A54a | 2 | #5 | 7'-8" | | | 7'-8" | | | | | | | | | | |
| | Varies To | | | | | | | | | | | | | | | | |
| | A54m | 2 | #5 | 12'-10" | | | 12'-10" | | | | | | | | | | |
| | A60a | 1 | #5 | 13'-3" | | | 13'-3" | | | | | | | | | | |
| | Varies To | | | | | | | | | | | | | | | | |
| | A60h | 1 | #5 | 13'-8" | | | 13'-8" | | | | | | | | | | |
| | A61a | 1 | #5 | 17'-10" | | | 17'-10" | | | | | | | | | | |
| | Varies To | | | | | | | | | | | | | | | | |
| | A61l | 1 | #5 | 18'-4" | | | 18'-4" | | | | | | | | | | |
| | 5A30 | 15 | #5 | 9'-6 K" | 3 | | 3'-3 K" | 4'-4" | 2'-2" | | | | 3'-0" | | 3'-0" | | 8'-5 K" |
| | 5A31 | 27 | #5 | 7'-10 K" | 20 | | 2'-5" | 3'-K" | 2'-2" | | | | | | | | |
| | 5A32 | 57 | #5 | 7'-9" | 17 | | 3'-7" | 4'-2" | | | | | | | | | |
| | 5A38 | 111 | #5 | 6'-5" | 17 | | 2'-5" | 1'-7" | 2'-5" | | | | | | | | |
| | 5A40 | 5 | #5 | 10'-10 K" | 3 | | 2'-2" | 6'-4 K" | 2'-4 K" | | | | 4'-6" | | 4'-6" | | 5'-4" |
| | 5A41 | 11 | #5 | 8'-10 K" | 20 | | 2'-2" | 4'-6 K" | 2'-2" | | | | | | | | |
| | 5A42 | 5 | #5 | 12'-2 K" | 3 | | 3'-5" | 5'-4 K" | 2'-4 K" | | | | 4'-6" | | 4'-6" | | 10'-4 K" |
| | 5A43 | 11 | #5 | 8'-4 K" | 20 | | 2'-6" | 4'-6 K" | 2'-2" | | | | | | | | |
| | 5A55 | 5 | #5 | 10'-0" | 3 | | 2'-2" | 5'-8" | 2'-2" | | | | 4'-0" | | 4'-0" | | 8'-4" |
| | 5A56 | 12 | #5 | 8'-4 K" | 20 | | 2'-2" | 4'-K" | 2'-2" | | | | | | | | |
| | 5A57 | 5 | #5 | 11'-6" | 3 | | 3'-5" | 5'-6" | 2'-4 K" | | | | 4'-0" | | 4'-0" | | 9'-10 K" |
| | 5A58 | 11 | #5 | 8'-10 K" | 20 | | 2'-8" | 4'-K" | 2'-2" | | | | | | | | |
| | 5A65 | 102 | #5 | 6'-8" | 25 | | 1'-6" | 1'-4" | 10" | 1'-4" | 1'-8" | | 1'-3 K" | | 7 K" | | |
| | SS51 | 14 | #5 | 25'-8" | | | 25'-6" | | | | | | | | | | |
| | SS52 | 2 | #5 | 26'-10" | | | 26'-10" | | | | | | | | | | |
| | SS53 | 47 | #5 | 8'-8" | | | 8'-8" | | | | | | | | | | |
| | SS54 | 43 | #5 | 12'-6" | | | 12'-8" | | | | | | | | | | |
| | SS55 | 1098 | #5 | 4'-2" | | | 4'-2" | | | | | | | | | | |
| | SS57 | 2 | #5 | 22'-5" | | | 22'-5" | | | | | | | | | | |
| | SS58 | 6 | #5 | 7'-8" | | | 7'-8" | | | | | | | | | | |
| | SS59 | 2 | #5 | 18'-0" | | | 18'-0" | | | | | | | | | | |
| | SS70 | 2 | #5 | 28'-7" | | | 28'-7" | | | | | | | | | | |
| | SS71 | 23 | #5 | 9'-6" | | | 9'-6" | | | | | | | | | | |
| | SS72 | 3 | #5 | 10'-6" | | | 10'-6" | | | | | | | | | | |
| | SS73 | 4 | #5 | 8'-6" | | | 8'-6" | | | | | | | | | | |
| | SS79 | 16 | #5 | 20'-6" | | | 20'-6" | | | | | | | | | | |
| | SS80 | 36 | #5 | 28'-6" | | | 28'-6" | | | | | | | | | | |
| | SS81 | 22 | #5 | 15'-8" | | | 15'-8" | | | | | | | | | | |
| | SS82 | 193 | #5 | 7'-6" | | | 7'-6" | | | | | | | | | | |
| | A47a | 1 | #6 | 12'-5" | | | 12'-5" | | | | | | | | | | |
| | Varies To | | | | | | | | | | | | | | | | |
| | A47p | 1 | #6 | 12'-7" | | | 12'-7" | | | | | | | | | | |
| | A52a | 1 | #6 | 13'-3" | | | 13'-3" | | | | | | | | | | |
| | Varies To | | | | | | | | | | | | | | | | |
| | A52o | 1 | #6 | 13'-9" | | | 13'-9" | | | | | | | | | | |
| | A53a | 1 | #6 | 17'-10" | | | 17'-10" | | | | | | | | | | |
| | Varies To | | | | | | | | | | | | | | | | |
| | A53p | 1 | #6 | 18'-4" | | | 18'-4" | | | | | | | | | | |
| | 9A44 | 64 | #6 | 8'-2" | 17 | | 3'-7" | 4'-7" | | | | | | | | | |
| | 6S00 | 28 | #6 | 8'-8" | | | 8'-8" | | | | | | | | | | |
| | A39a | 1 | #7 | 17'-8" | | | 17'-8" | | | | | | | | | | |
| | Varies To | | | | | | | | | | | | | | | | |
| | A39p | 1 | #7 | 19'-10" | | | 19'-10" | | | | | | | | | | |
| | A53a | 1 | #7 | 16'-4" | | | 16'-4" | | | | | | | | | | |
| | Varies To | | | | | | | | | | | | | | | | |
| | A53o | 1 | #7 | 19'-8" | | | 19'-8" | | | | | | | | | | |
| | 7A33 | 32 | #7 | 9'-0" | 17 | | 3'-7" | 5'-5" | | | | | | | | | |
| | 7S08 | 33 | #7 | 9'-8" | | | 9'-6" | | | | | | | | | | |
| | 8S01 | 32 | #8 | 9'-8" | | | 9'-6" | | | | | | | | | | |
| | 8S02 | 33 | #8 | 10'-8" | | | 10'-6" | | | | | | | | | | |
| | A36a | 2 | #5 | 12'-1" | | | 12'-1" | | | | | | | | | | |
| | Varies To | | | | | | | | | | | | | | | | |
| | A36h | 2 | #5 | 14'-2" | | | 14'-2" | | | | | | | | | | |
| | A43a | 2 | #5 | 7'-8" | | | 7'-8" | | | | | | | | | | |
| | Varies To | | | | | | | | | | | | | | | | |
| | A45m | 2 | #5 | 7'-11" | | | 7'-11" | | | | | | | | | | |
| | A48a | 1 | #6 | 17'-1" | | | 17'-1" | | | | | | | | | | |
| | Varies To | | | | | | | | | | | | | | | | |
| | A48p | 1 | #6 | 17'-3" | | | 17'-3" | | | | | | | | | | |
| | A58a | 2 | #5 | 8'-2" | | | 8'-2" | | | | | | | | | | |
| | Varies To | | | | | | | | | | | | | | | | |
| | A58m | 2 | #5 | 9'-2" | | | 9'-2" | | | | | | | | | | |

# RETAINING WALLS 1 THRU 4

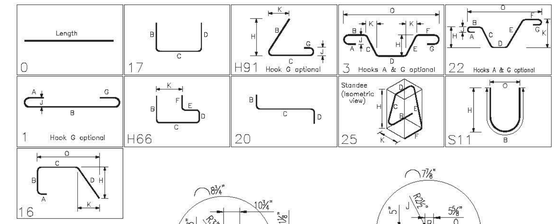


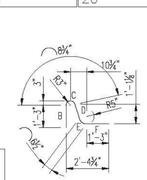


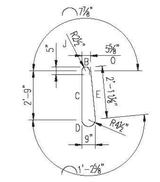


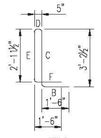


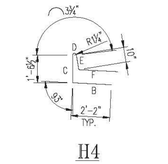


Legend:

| | |
|---|---|
| IF | Inside Face |
| OF | Outside Face |
| NF | Near Face |
| FF | Far Face |
| EF | Each Face |
| V | Vertical |
| H | Horizontal |
| EW | Each Way |
| T | Top |
| SB | Support Bars |
| B/Bot | Bottom |
| BB | Bond Beam |
| MV | Masonry Vert. |
| MD | Masonry Dwls |

# SPECIAL BEND DETAILS

Vermont Agency of Transportation
RECEIVED
CK'D BY RK/GL OK'D BY WL
March 9, 2015
RESUBMIT NO Approved AsNoted
BY KH DATE 3-12-2015

| No. | Description | Date | By |
|---|---|---|---|
| 2 | FINAL APPROVAL PRINT | 03/09/15 | CPS |
| 1 | APPROVAL PRINT | 02/13/15 | CPS |

Revisions and Issue Record

The full intent and purpose of this drawing is the placing of reinforcing steel bars ONLY. It is NOT to be used as a means of communication between the Architect, Engineer, Contractor or any other Sub-trades.

THIS DRAWING IS NOT TO BE SCALED.

HarrisRebar Barker Steel
National Strength. Local Service.

DETAILED AT:
CANAAN
NEW HAMPSHIRE

Project: BRIDGE 43 S REPLACEMENT
I-91 HARTFORD VT

Drawing: I-91 SOUTHBOUND
BAR SCHEDULES

Customer: PCL CIVIL CONSTRUCTORS
Engineer: G LAROCHE
Refer to Release:

| Date | Drawn | Chkd. | JOB No. | Dwg. No. |
|---|---|---|---|---|
| 02/09/15 | CPS | | 33505535 | R06S |

W:\csample\Projects\33505535\Placing Drawings\DWGs\R01S.dwg

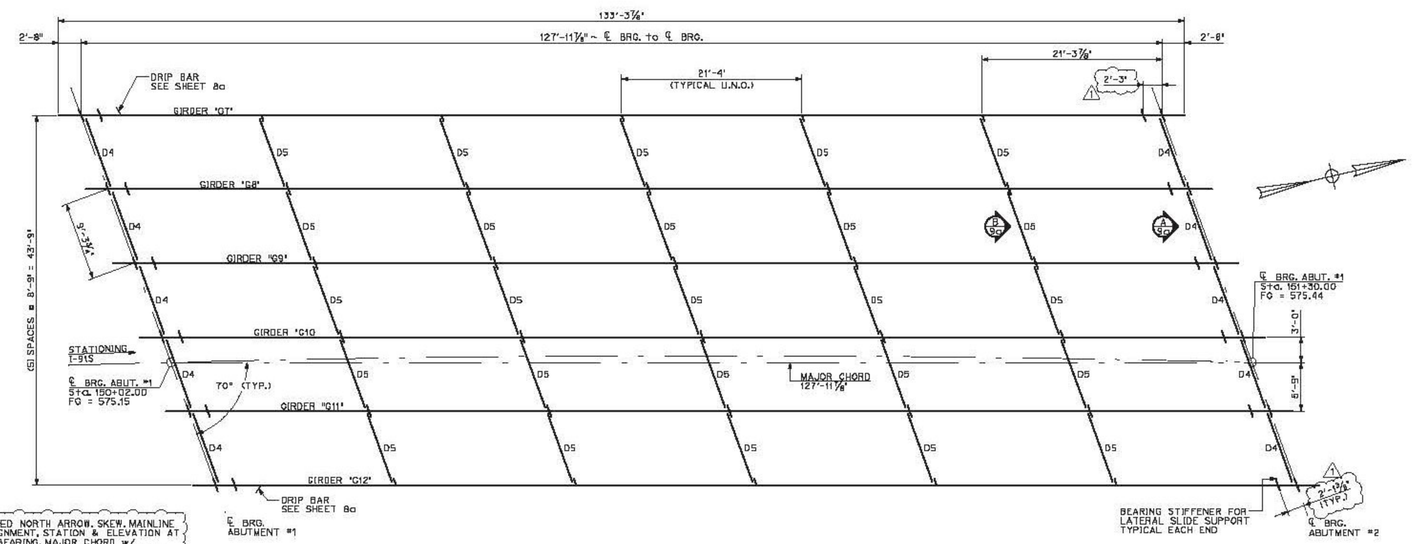


**SOUTHBOUND FRAMING PLAN (BRIDGE 43S)**
SCALE: ¼" = 1'-0"

2/ ADDED NORTH ARROW, SKEW, MAINLINE ALIGNMENT, STATION & ELEVATION AT ℄ BEARING, MAJOR CHORD w/ DIMENSIONS TO ADJACENT GIRDERS

2/ IT IS VERIFIED THAT THE ℄ DIAPHRAGMS ARE SHOWN ON THE CORRECT SIDE OF THE BEARING STIFFENERS. THE NOTE ON SHEET 9a HAS BEEN REMOVED.

2/ THE SHIP MARKS ON THE SOUTHBOUND BRIDGE HAVE BEEN CHANGED SO THAT THEY ARE DIFFERENT FROM THE NORTHBOUND BRIDGE.

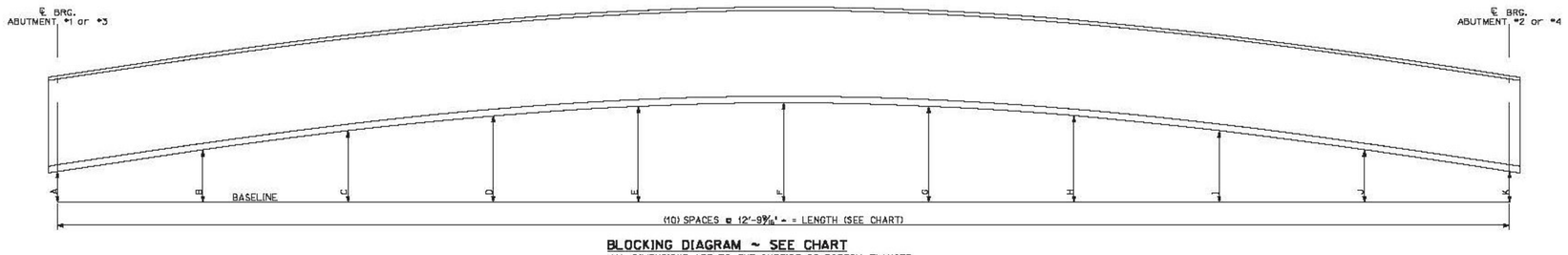


**BLOCKING DIAGRAM ~ SEE CHART**
ALL DIMENSIONS ARE TO THE OUTSIDE OF BOTTOM FLANGES
NOT TO SCALE

| GIRDER LINE | LENGTH | ABUT. 1 ℄ BRG. 'A' | 'B' | 'C' | 'D' | 'E' | 'F' | 'G' | 'H' | 2/ 'I' | 'J' | ABUT. 2 ℄ BRG. 'K' |
|---|---|---|---|---|---|---|---|---|---|---|---|---|
| SOUTHBOUND GIRDERS BRIDGE 43S | 127'-11⅞" | 6" | 9" | 11'-1⅛" | 13¾" | 15⅛" | 15½" | 15⅛" | 13¾" | (11'-1⅛") | 9" | 6" |
| NORTHBOUND GIRDER BRIDGE 43N | 127'-11¹³⁄₁₆" | 6" | 10⅝" | 14" | 17" | 18⅞" | 19½" | 18⅞" | 17" | 14" | 10⅝" | 6" |

## GENERAL FABRICATION NOTES

MATERIAL SPECIFICATIONS

1.) ALL MATERIAL SHALL BE ASTM A709 GRADE 50W (UNO). THE BOTTOM FLANGES OF THE GIRDERS FOR BRIDGE 43N SHALL CONFORM TO ASTM A709 HPS 70W.

2/ 2.) ALL A709 GRADE 50W MATERIAL DENOTED "CVN" SHALL MEET THE CHARPY V-NOTCH TESTING REQUIREMENTS OF ZONE 2, H FREQUENCY: 15 FT-LB AT 40° (UP TO 2" WELDED)

ALL A709 GRADE HPS 70W MATERIAL DENOTED "CVN" SHALL MEET THE CHARPY V-NOTCH TESTING REQUIREMENTS OF ZONE 2, H FREQUENCY: 25 FT-LB AT -10° (UP TO 4" WELDED)

ITEMS SHALL CALL OUT "CVN" FOR EACH APPLICABLE ITEM IN THE BILL OF MATERIALS

3.) BOLTS SHALL BE HIGH STRENGTH BOLTS ASTM A325, TYPE 3
NUTS SHALL BE A563 GRADE DH OR DH3
WASHERS SHALL BE ASTM F436, TYPE 3

BOLTS AND NUTS SHALL BE ROTATIONAL CAPACITY TESTED. DO NOT MIX NUTS AND BOLTS FROM DIFFERENT CONTAINERS UNLESS ALL NUTS AND BOLTS HAVE THE SAME LOT NUMBER.

2/ 4.) DIRECT TENSION INDICATORS SHALL BE INSTALLED WITH ALL HIGH STRENGTH BOLTS

FABRICATION

1.) DIE STAMPING IS ALLOWED IN SPECIFIC LOCATIONS WITH THE APPROVAL OF THE ENGINEER.

2.) ALL EDGES OF FLAME CUT MATERIAL SUBJECTED TO CALCULATED STRESSES SHALL BE ROUNDED TO A MINIMUM RADIUS OF 1/16", OR AN EQUIVALENT FLAT SURFACE AT A SUITABLE ANGLE.

2/ 3.) ALL PLATES FLAME CUT FROM LARGER PLATES, SHALL BE CUT SO THAT THE PRIMARY DIRECTION OF ROLLING IS PARALLEL TO THE MAIN TENSILE OR COMPRESSIVE STRESS. STANDARD SPEC. 506.08

4.) FLANGE PLATE MATERIAL SHALL HAVE AN EDGE HARDNESS NOT GREATER THAN HRC 30, ALLOWED per STANDARD SPEC. 506.09.

WELDING

1.) ALL WELDING PROCEDURES SHALL BE IN ACCORDANCE WITH THE PROVISIONS OF SUBSECTION 506.10.

2.) NON DESTRUCTIVE TESTING OF WELDS SHALL BE IN ACCORDANCE WITH ANSI/AASHTO/AWS D1.5 – SECTION 6. FLANGE WELDS WILL BE CALLED OUT AS BEING IN EITHER COMPRESSION OR TENSION. WEB WELDS WILL LABEL EITHER TOP OR BOTTOM AS BEING IN COMPRESSION, OR BE LABELED AS BEING IN A STRESS REVERSAL AREA.

FLANGE SPLICES SHALL BE TESTED AS FOLLOWS:
FLANGE SPLICES IN TENSION ~ TESTED 100%
FLANGE SPLICES IN STRESS REVERSAL AREAS ~ TESTED 100%
FLANGE SPLICES IN COMPRESSION ~ TESTED 25%

WEB SPLICES SHALL BE TESTED AS FOLLOWS:
FOR 1/6 THE DEPTH OF THE WEB (TENSION AREA) ~ TESTED 100%
FOR THE REMAINING DEPTH OF WEB (COMPRESSION AREA) ~ TESTED 25 %

FOR 1/6 DEPTH OF THE WEB @ TOP & BTM. (STRESS REVERSAL) ~ TESTED 100%
THE REMAINING 2/3 OF THE WEB ~ TESTED 25%

2/ 3.) TERMINATE CONNECTION ℄ & STIFFENER WELDS AS SHOWN IN THE "WELD TERMINATION DETAIL" ON SHEET 8a.

FIELD CONNECTIONS

2/ 1.) FIELD BOLTS SHALL HAVE A HEAVY HEX NUT, HEX HEAD, ONE HARD WASHER, AND ONE DIRECT TENSION INDICATOR (DTI) EACH. DTI's SHALL BE INSTALLED ACCORDING TO SUBSECTION 506.19.

2.) PIECE MARKS WILL BE LOCATED AS SHOWN ON ERECTION DRAWINGS. ALL ERECTION MARKS, MATCH MARKS, AND WEIGHT MARKS MUST NOT BE EXPOSED IN THE FINISHED STRUCTURE.

CLEANING AND PAINTING

2/ 1.) UNPAINTED STEEL SHALL BE BLAST CLEANED TO SSPC SP-10 TO ACHIEVE A UNIFORM WEATHERED APPEARANCE.

Vermont Agency of Transportation
**RECEIVED**
CK'D BY RK/JC OK'D BY WL
February 17, 2015
RESUBMIT NO Approved
BY KH DATE 2-19-2015

**PROJECT No. IM 091-2(79)**
**ITEM No. 506.55**

| | | | | | |
|---|---|---|---|---|---|
| FINISH | N/A | | | | |
| MATERIAL | SEE DETAIL SHEETS | | | | |
| HOLES | | | | | |
| ELECTRODES | PER WELD PROCEDURE | | | | |
| WELDS | PER WELD PROCEDURE | 2 | 2/17/14 | As noted | JJH |
| SURFACE PREP | | 1 | 2/5/14 | Lateral slide support | JJH |
| | | NO | DATE | DESCRIPTION | BY |
| | | REVISIONS | | | |

ARC ENTERPRISES, INC.
ADVANCED RESOURCES & CONST. ENTERPRISES, INCORPORATED
P.O. BOX 120 KINGFIELD, ME. 04947
PHONE: (207) 265-2646 – FAX: (207) 265-4054

| | | | |
|---|---|---|---|
| DRAFTER | JJH | SOUTHBOUND FRAMING PLAN | PROJECT NO. 14-180 |
| DATE | JAN. 2015 | HARTFORD, VT I-91 SB OVER US RTE 5 PROJECT NUMBER IM 091-2(79) | DWG. NO. 1a |
| CHECKED | GNM | SC: PCL CIVIL CONSTRUCTORS | |
| DATE | JAN. 2015 | | |

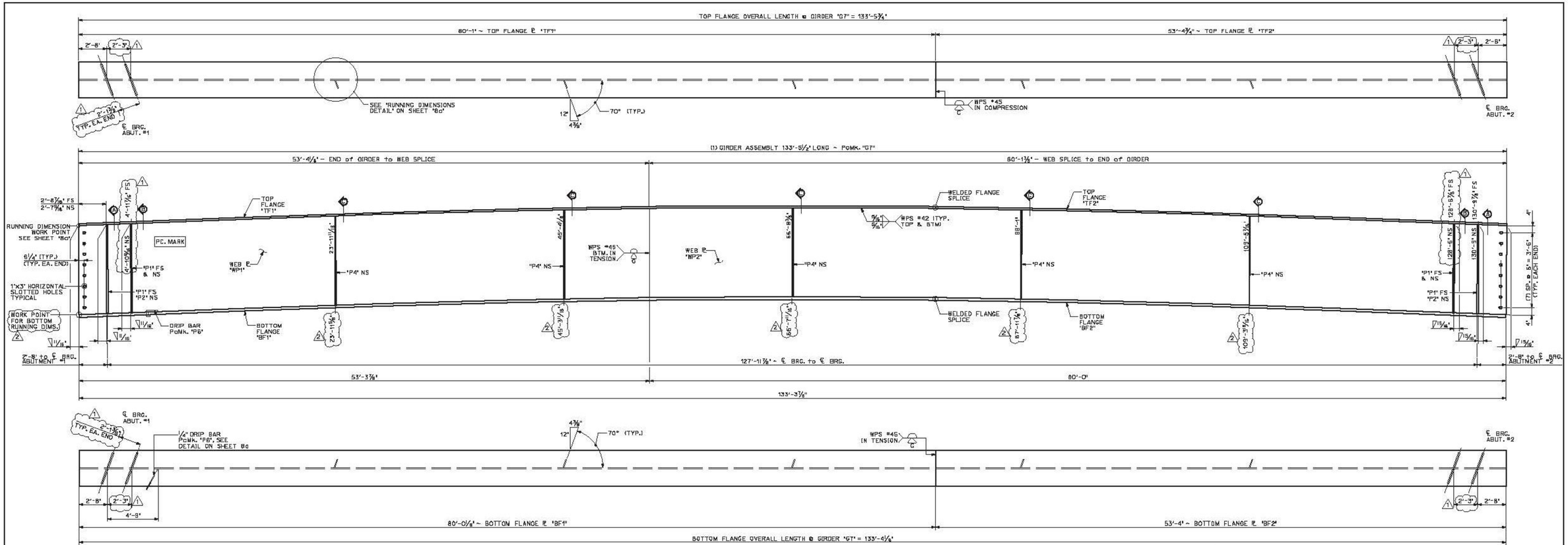


2 SHIP MARK CHANGED FROM "G1" TO "G7". (TYPICAL ALL APPLICABLE DETAILS

**1 / 2g DIMENSIONAL PLANS & ELEVATIONS ~ GIRDER "G7"**
HORIZONTAL SCALE: 1/4" = 1'-0"
VERTICAL SCALE EXAGGERATED 2:1

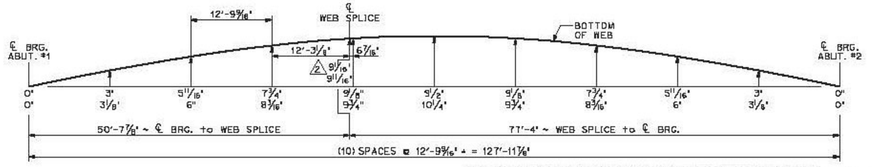


**GIRDER "G1" CAMBER**

THE TWO CAMBER DIMENSIONS SHOWN REPRESENT THE FOLLOWING:
TOP DIMENSION ~ TOTAL CAMBER IN FINISHED BEAM IN A NO-LOAD POSITION
BTM. DIMENSION ~ TOTAL CAMBER IN BEAM @ TIME OF FABRICATION

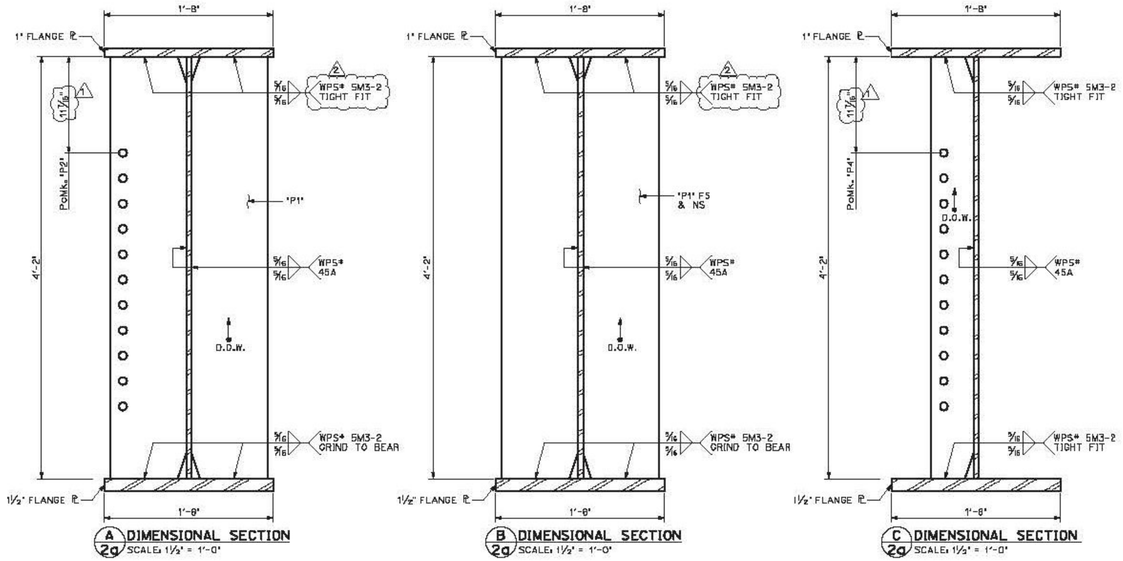


**A / 2g DIMENSIONAL SECTION**
SCALE: 1½" = 1'-0"

**B / 2g DIMENSIONAL SECTION**
SCALE: 1½" = 1'-0"

**C / 2g DIMENSIONAL SECTION**
SCALE: 1½" = 1'-0"

## BILL OF MATERIALS

| SHIP | SHIP MARK | NO. PCS. | PIECE MARK | DESCRIPTION | LENGTH | REMARKS | MAT'L | |
|---|---|---|---|---|---|---|---|---|
| 1 | G7 | | | BRIDGE GIRDER ASSEMBLY | 133'-5½" | 38,100# | | |
| | | 1 | WP1 | ℙ 5/8" x 50" | 53'-4¼" | 5700# | CVN | 2 LENGTH VERIFIED |
| | | 1 | WP2 | ℙ 5/8" x 50" | 80'-1⅜" | 8550# | CVN | |
| | | 1 | TF1 | ℙ 1" x 20" | 80'-1" | 5475# | CVN | |
| | | 1 | TF2 | ℙ 1" x 20 | 53'-4¾" | 3650# | CVN | |
| | | 1 | BF1 | ℙ 1½" x 20" | 80'-0⅛" | 8200# | CVN | |
| | | 1 | BF2 | ℙ 1½" x 20" | 53'-4" | 5450# | CVN | |
| | | | | | | | | |
| | | 6 | P1 | SEE SHEET 8a 2 | | | | |
| | | 2 | P2 | SEE SHEET 8a | | | | |
| | | 5 | P4 | SEE SHEET 8a | | | | |
| | | | | | | | | |
| | | 1 | P6 | ℙ 1/4" x 3½" DRIP BAR | | | | |

Vermont Agency of Transportation
**RECEIVED**
CK'D BY RKJC OK'D BY WL
February 17, 2015
RESUBMIT NO Approved
BY KH DATE 2-19-2015

PROJECT No. IM 091-2(79)
ITEM No. 506.55

| | | | | |
|---|---|---|---|---|
| FINISH | 1 SSPC SP10 | | | |
| MATERIAL | AASHTO M270 (ASTM A709) GRADE 50W | | | |
| HOLES | 15/16 " Ø U.N.O. | | | |
| ELECTRODES | PER WELD PROCEDURE | | | |
| WELDS | PER WELD PROCEDURE | 2 | 2/17/14 | As noted JJH |
| SURFACE PREP | SSPC SP6 | 1 | 2/5/15 | HOLE & PLATE LOCATION JJH |
| | | NO | DATE | DESCRIPTION BY |

REVISIONS

ARC BRIDGE, INC.
ADVANCED RESOURCES & CONST. ENTERPRISES, INCORPORATED
P.O. BOX 120 KINGFIELD, ME. 04947
PHONE: (207) 265-2646 – FAX: (207) 265-4034

| | | | |
|---|---|---|---|
| DRAFTER | JJH | SOUTHBOUND GIRDER "G7" 2 | PROJECT NO. 14-180 |
| DATE | JAN. 2015 | HARTFORD, VT I-91 SB OVER US RTE 5 PROJECT NUMBER IM 091-2(79) | |
| CHECKED | GNM | PCL CIVIL CONSTRUCTORS | DWG. NO. 2a |
| DATE | JAN. 2015 | | |

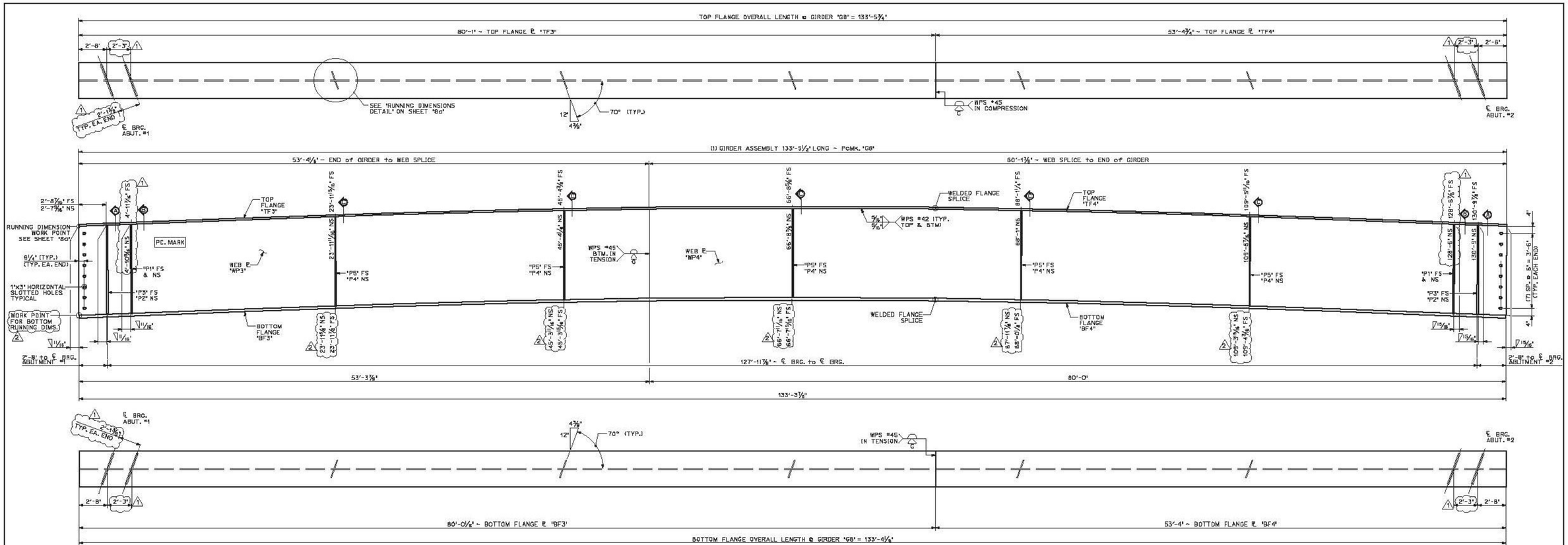


2 SHIP MARK CHANGED FROM "G2" TO "G8". TYPICAL ALL APPLICABLE DETAILS.

## 1 / 3a DIMENSIONAL PLANS & ELEVATIONS ~ GIRDER "G8"

HORIZONTAL SCALE: 1/4" = 1'-0"
VERTICAL SCALE EXAGGERATED 2:1

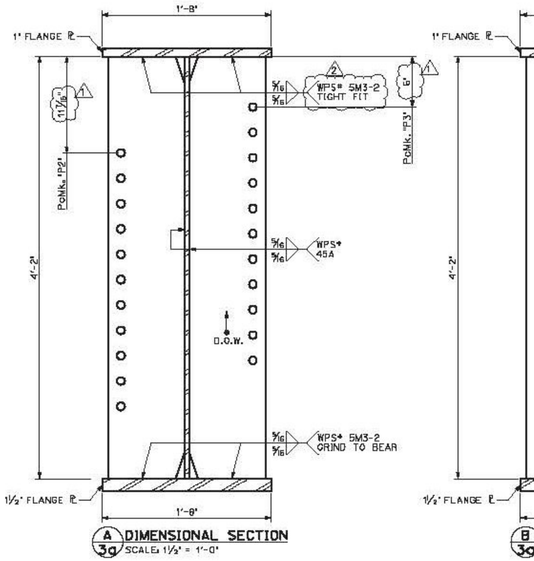


## A 3a DIMENSIONAL SECTION

SCALE: 1½" = 1'-0"

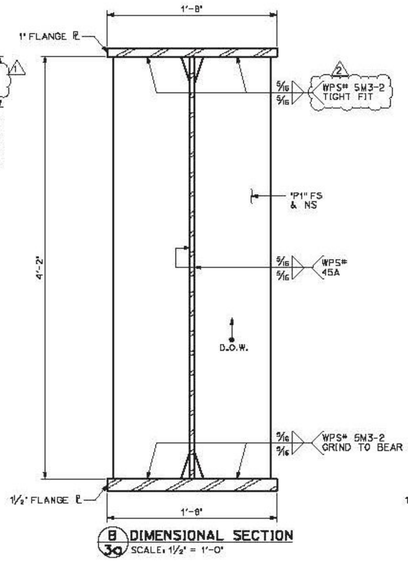


## B 3a DIMENSIONAL SECTION

SCALE: 1½" = 1'-0"

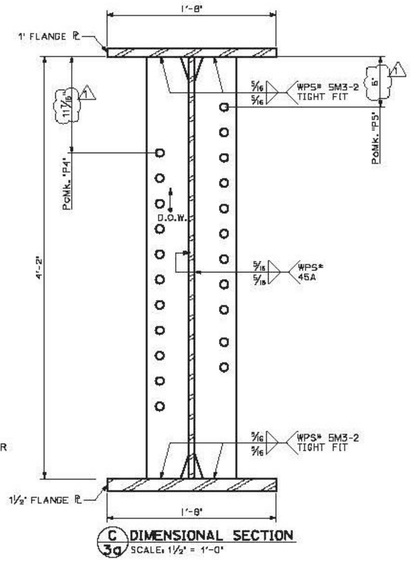


## C 3a DIMENSIONAL SECTION

SCALE: 1½" = 1'-0"

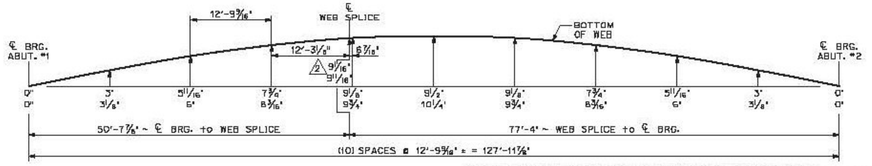


## GIRDER "G8" CAMBER

THE TWO CAMBER DIMENSIONS SHOWN REPRESENT THE FOLLOWING:
TOP DIMENSION ~ TOTAL CAMBER IN FINISHED BEAM IN A NO-LOAD POSITION
BTM. DIMENSION ~ TOTAL CAMBER IN BEAM @ TIME OF FABRICATION

## BILL OF MATERIALS

| SHIP | SHIP MARK | NO. PCS. | PIECE MARK | DESCRIPTION | LENGTH | REMARKS | MAT'L | |
|---|---|---|---|---|---|---|---|---|
| 1 | G8 | | | BRIDGE GIRDER ASSEMBLY | 133'-5½" | 38,225# | | |
| | | 1 | WP3 | ℄ 5/8" x 50" | 53'-4¼" | 5700# | CVN | 2 LENGTH VERIFIED |
| | | 1 | WP4 | ℄ 5/8" x 50" | 80'-1⅜" | 8550# | CVN | |
| | | 1 | TF3 | ℄ 1" x 20" | 80'-1" | 5475# | CVN | |
| | | 1 | TF4 | ℄ 1" x 20 | 53'-4¾" | 3650# | CVN | |
| | | 1 | BF3 | ℄ 1½" x 20" | 80'-0⅛" | 8200# | CVN | |
| | | 1 | BF4 | ℄ 1½" x 20" | 53'-4" | 5450# | CVN | |
| | | | | | | | | |
| | | 4 | P1 | SEE SHEET 8a 2 | | | | |
| | | 2 | P2 | SEE SHEET 8a | | | | |
| | | 2 | P3 | SEE SHEET 8a | | | | |
| | | 5 | P4 | SEE SHEET 8a | | | | |
| | | 6 | P5 | SEE SHEET 8a | | | | |
| | | | | | | | | |
| | | | | | | | | |
| | | | | | | | | |

Vermont Agency of Transportation
**RECEIVED**
CK'D BY RKJC OK'D BY WL
February 17, 2015
RESUBMIT NO Approved
BY KH DATE 2-19-2015

**PROJECT No. IM 091-2(79)**
**ITEM No. 506.55**

| | | | | |
|---|---|---|---|---|
| FINISH | 1 SSPC SP10 | | | |
| MATERIAL | AASHTO M270 (ASTM A709) GRADE 50W | | | |
| HOLES | 15/16 " Ø U.N.O. | | | |
| ELECTRODES | PER WELD PROCEDURE | | | |
| WELDS | PER WELD PROCEDURE | 2 | 2/17/14 | As noted JJH |
| SURFACE PREP | SSPC SP6 | 1 | 2/5/15 | HOLE & PLATE LOCATION JJH |
| | | NO | DATE | DESCRIPTION BY |

REVISIONS

ARC BRIDGE, PE
ADVANCED RESOURCES & CONST. ENTERPRISES, INCORPORATED
P.O. BOX 120 KINGFIELD, ME. 04947
PHONE: (207) 265-2646 – FAX: (207) 265-4054

| | | | |
|---|---|---|---|
| DRAFTER | JJH | SOUTHBOUND GIRDER "G8" 2 | PROJECT NO. 14-180 |
| DATE | JAN. 2015 | HARTFORD, VT I-91 SB OVER US RTE 5 PROJECT NUMBER IM 091-2(79) | |
| CHECKED | GNM | PC: PCL CIVIL CONSTRUCTORS | DWG. NO. 3a |
| DATE | JAN. 2015 | | |

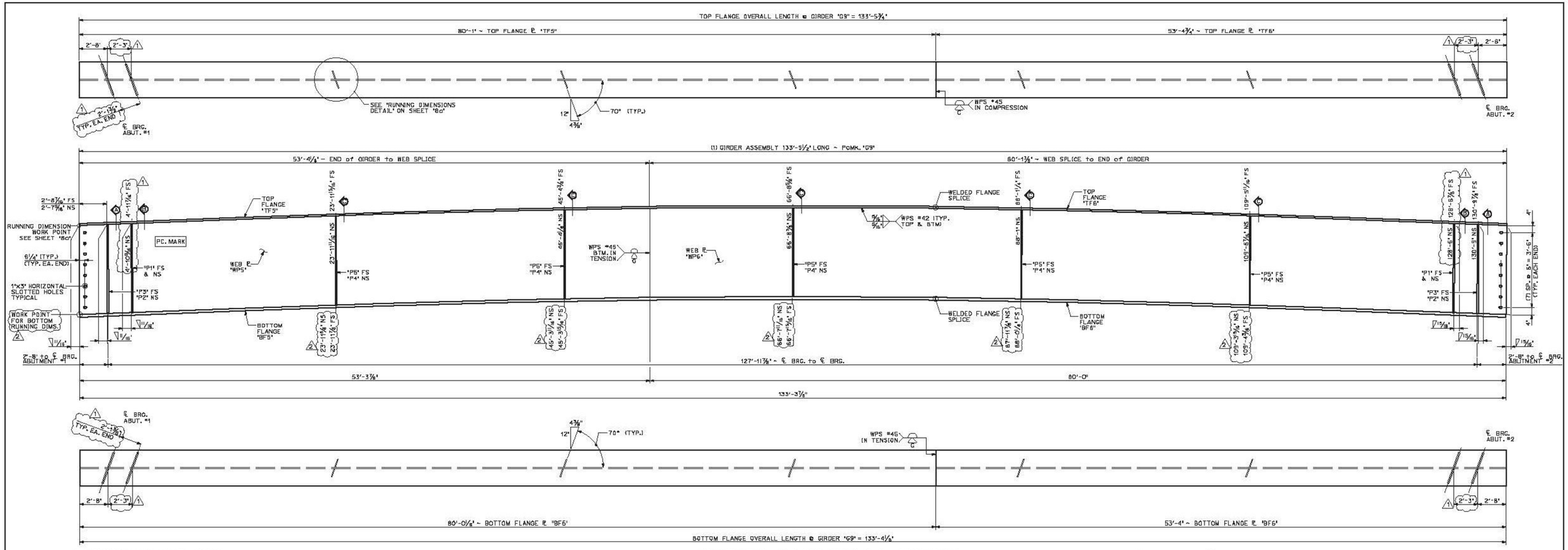


2 SHIP MARK CHANGED FROM "G3" TO "G9". TYPICAL ALL APPLICABLE DETAILS

## 1 / 4a DIMENSIONAL PLANS & ELEVATIONS ~ GIRDER 'G9'

HORIZONTAL SCALE: 1/4" = 1'-0"
VERTICAL SCALE EXAGGERATED 2:1

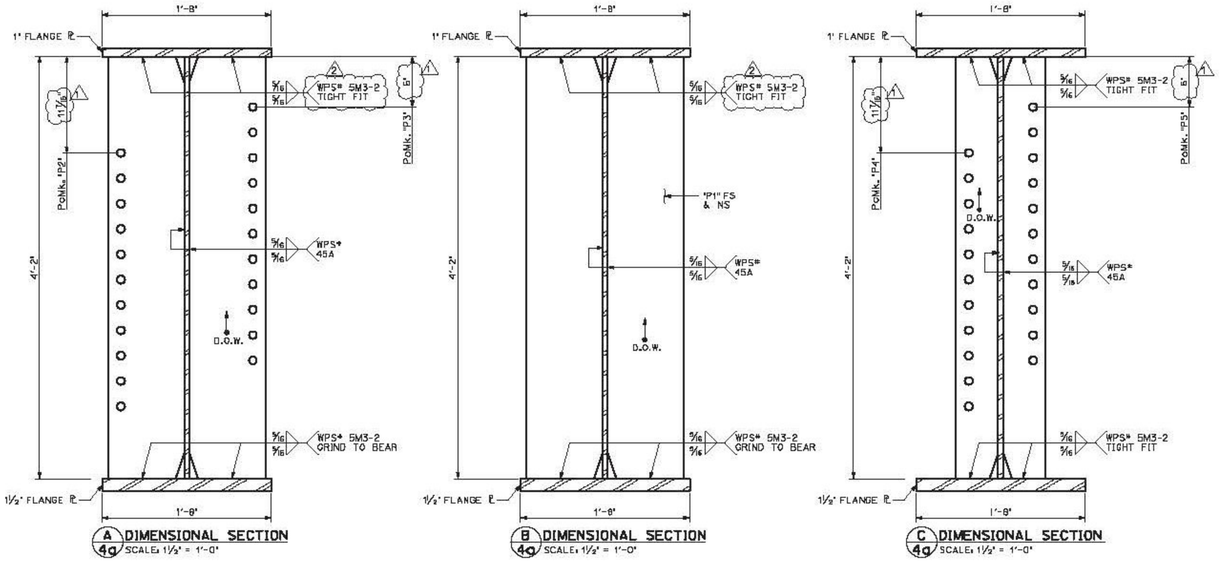


A / 4a DIMENSIONAL SECTION
SCALE: 1½" = 1'-0"

B / 4a DIMENSIONAL SECTION
SCALE: 1½" = 1'-0"

C / 4a DIMENSIONAL SECTION
SCALE: 1½" = 1'-0"

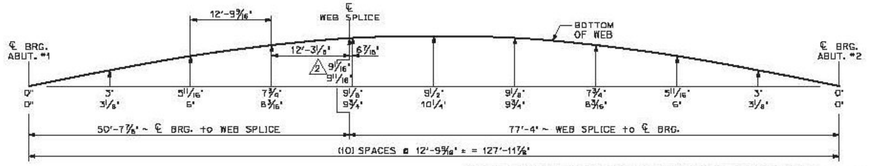


## GIRDER 'G9' CAMBER

THE TWO CAMBER DIMENSIONS SHOWN REPRESENT THE FOLLOWING:
TOP DIMENSION ~ TOTAL CAMBER IN FINISHED BEAM IN A NO-LOAD POSITION
BTM. DIMENSION ~ TOTAL CAMBER IN BEAM @ TIME OF FABRICATION

## BILL OF MATERIALS

| SHIP | SHIP MARK | NO. PCS. | PIECE MARK | DESCRIPTION | LENGTH | REMARKS | MAT'L | |
|---|---|---|---|---|---|---|---|---|
| 1 | G9 | | | BRIDGE GIRDER ASSEMBLY | 133'-5½" | 38,225# | | |
| | | 1 | WP5 | ℄ 5/8" x 50" | 53'-4¼" | 5700# | CVN | 2 LENGTH VERIFIED |
| | | 1 | WP6 | ℄ 5/8" x 50" | 80'-1⅜" | 8550# | CVN | |
| | | 1 | TF5 | ℄ 1" x 20" | 80'-1" | 5475# | CVN | |
| | | 1 | TF6 | ℄ 1" x 20 | 53'-4¾" | 3650# | CVN | |
| | | 1 | BF5 | ℄ 1½" x 20" | 80'-0⅛" | 8200# | CVN | |
| | | 1 | BF6 | ℄ 1½" x 20" | 53'-4" | 5450# | CVN | |
| | | | | | | | | |
| | | 4 | P1 | SEE SHEET 8a 2 | | | | |
| | | 2 | P2 | SEE SHEET 8a | | | | |
| | | 2 | P3 | SEE SHEET 8a | | | | |
| | | 5 | P4 | SEE SHEET 8a | | | | |
| | | 5 | P5 | SEE SHEET 8a | | | | |
| | | | | | | | | |
| | | | | | | | | |
| | | | | | | | | |

Vermont Agency of Transportation
RECEIVED
CK'D BY RKJC OK'D BY WL
February 17, 2015
RESUBMIT NO Approved
BY KH DATE 2-19-2015

PROJECT No. IM 091-2(79)
ITEM No. 506.55

| | | | | |
|---|---|---|---|---|
| FINISH | 4 SSPC SP10 | | | |
| MATERIAL | AASHTO M270 (ASTM A709) GRADE 50W | | | |
| HOLES | 15/16 " Ø U.N.O. | | | |
| ELECTRODES | PER WELD PROCEDURE | | | |
| WELDS | PER WELD PROCEDURE | 2 | 2/17/14 | As noted JJH |
| SURFACE PREP | SSPC SP6 | 1 | 2/5/15 | HOLE & PLATE LOCATION JJH |
| | | NO | DATE | DESCRIPTION BY |

REVISIONS

ARC BRIDGES, INC.
ADVANCED RESOURCES & CONST. ENTERPRISES, INCORPORATED
P.O. BOX 120 KINGFIELD, ME. 04947
PHONE: (207) 265-2646 – FAX: (207) 265-4054

| | | | |
|---|---|---|---|
| DRAFTER | JJH | SOUTHBOUND GIRDER "G9" 1 2 | PROJECT NO. 14-180 |
| DATE | JAN. 2015 | HARTFORD, VT I-91 SB OVER US RTE 5 PROJECT NUMBER IM 091-2(79) | |
| CHECKED | GNM | PCL CIVIL CONSTRUCTORS | DWG. NO. 4a |
| DATE | JAN. 2015 | | |

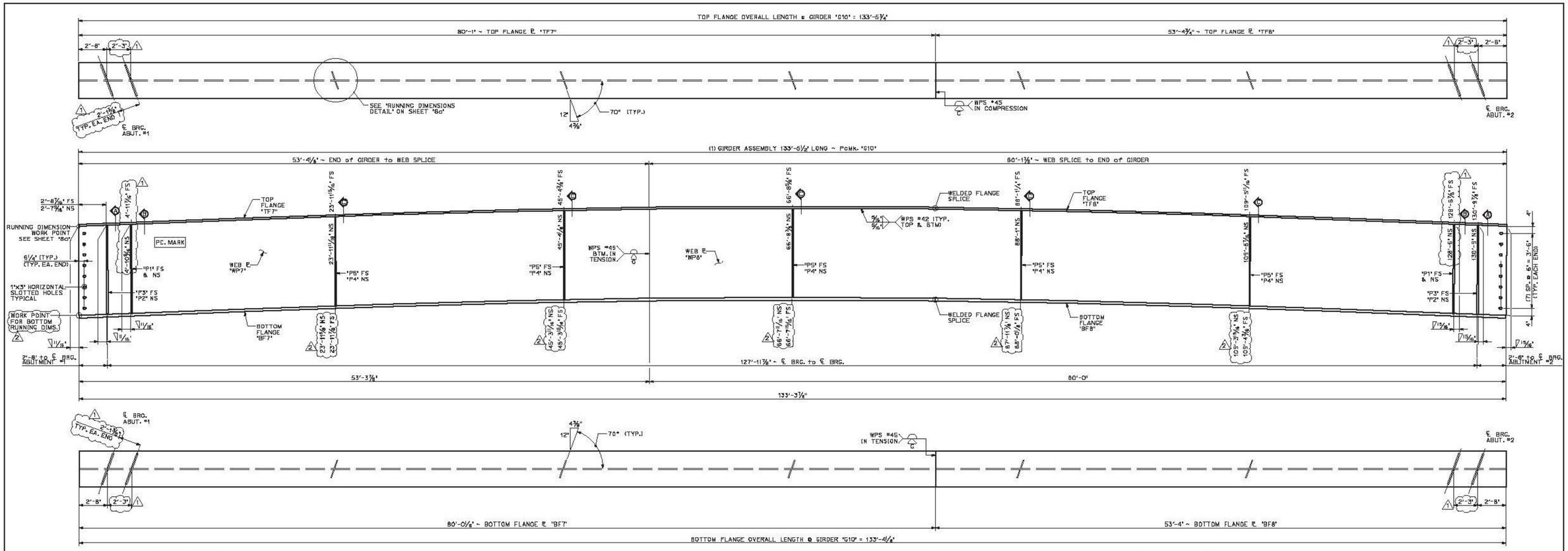


2 SHIP MARK CHANGED FROM "04" TO "G10". TYPICAL ALL APPLICABLE DETAILS

**1 5a DIMENSIONAL PLANS & ELEVATIONS ~ GIRDER 'G10'**
HORIZONTAL SCALE: 1/4" = 1'-0"
VERTICAL SCALE EXAGGERATED 2:1

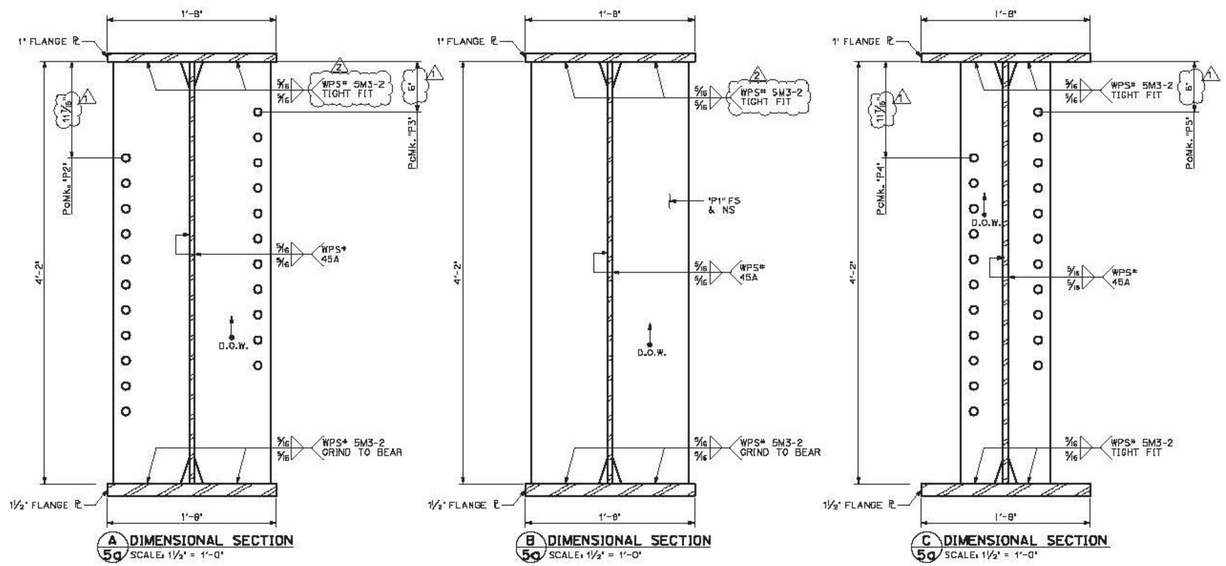


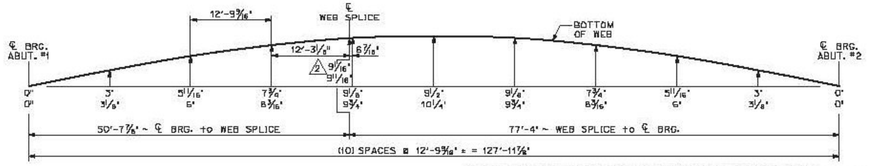


**GIRDER 'G10' CAMBER**

THE TWO CAMBER DIMENSIONS SHOWN REPRESENT THE FOLLOWING:
TOP DIMENSION ~ TOTAL CAMBER IN FINISHED BEAM IN A NO-LOAD POSITION
BTM. DIMENSION ~ TOTAL CAMBER IN BEAM @ TIME OF FABRICATION

## BILL OF MATERIALS

| SHIP | SHIP MARK | NO. PCS. | PIECE MARK | DESCRIPTION | LENGTH | REMARKS | MAT'L | |
|---|---|---|---|---|---|---|---|---|
| 1 | G10 | | | BRIDGE GIRDER ASSEMBLY | 133'-5½" | 38,225# | | |
| | | 1 | WP7 | ℄ 5/8" x 50" | 53'-4¼" | 5700# | CVN | 2 LENGTH VERIFIED |
| | | 1 | WP8 | ℄ 5/8" x 50" | 80'-1⅜" | 8550# | CVN | |
| | | 1 | TF7 | ℄ 1" x 20" | 80'-1" | 5475# | CVN | |
| | | 1 | TF8 | ℄ 1" x 20 | 53'-4¾" | 3650# | CVN | |
| | | 1 | BF7 | ℄ 1½" x 20" | 80'-0⅛" | 8200# | CVN | |
| | | 1 | BF8 | ℄ 1½" x 20" | 53'-4" | 5450# | CVN | |
| | | | | | | | | |
| | | 4 | P1 | SEE SHEET 8a 2 | | | | |
| | | 2 | P2 | SEE SHEET 8a | | | | |
| | | 2 | P3 | SEE SHEET 8a | | | | |
| | | 5 | P4 | SEE SHEET 8a | | | | |
| | | 5 | P5 | SEE SHEET 8a | | | | |
| | | | | | | | | |
| | | | | | | | | |
| | | | | | | | | |

Vermont Agency of Transportation
**RECEIVED**
CK'D BY RKJC OK'D BY WL
February 17, 2015
RESUBMIT NO Approved
BY KH DATE 2-19-2015

PROJECT No. IM 091-2(79)
ITEM No. 506.55

| | | | | |
|---|---|---|---|---|
| FINISH | 1 SSPC SP10 | | | |
| MATERIAL | AASHTO M270 (ASTM A709) GRADE 50W | | | |
| HOLES | 15/16 " Ø U.N.O. | | | |
| ELECTRODES | PER WELD PROCEDURE | | | |
| WELDS | PER WELD PROCEDURE | 2 2/17/14 | As noted | JJH |
| SURFACE PREP | SSPC SP6 | 1 2/5/15 | HOLE & PLATE LOCATION | JJH |
| | | NO DATE | DESCRIPTION | BY |

REVISIONS

ARC STEEL, PE
ADVANCED RESOURCES & CONST. ENTERPRISES, INCORPORATED
P.O. BOX 120 KINGFIELD, ME. 04947
PHONE: (207) 265-2646 – FAX: (207) 265-4054

| | | | |
|---|---|---|---|
| DRAFTER | JJH | SOUTHBOUND GIRDER 'G10' 1 2 | PROJECT NO. 14-180 |
| DATE | JAN. 2015 | HARTFORD, VT I-91 SB OVER US RTE 5 PROJECT NUMBER IM 091-2(79) | |
| CHECKED | GNM | PCL CIVIL CONSTRUCTORS | DWG. NO. 5a |
| DATE | JAN. 2015 | | |

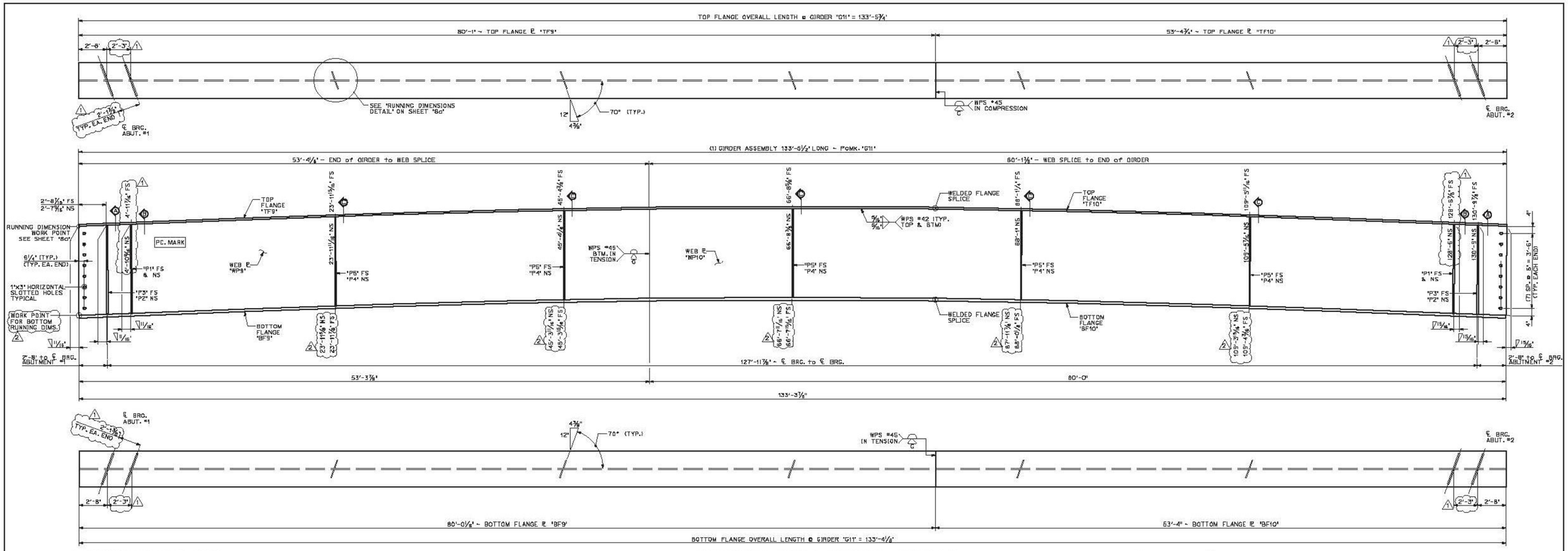


2 SHIP MARK CHANGED FROM "G5" TO "G11". TYPICAL ALL APPLICABLE DETAILS

## 1 / 6a DIMENSIONAL PLANS & ELEVATIONS ~ GIRDER "G11"

HORIZONTAL SCALE: ⅛" = 1'-0"
VERTICAL SCALE EXAGGERATED 2:1

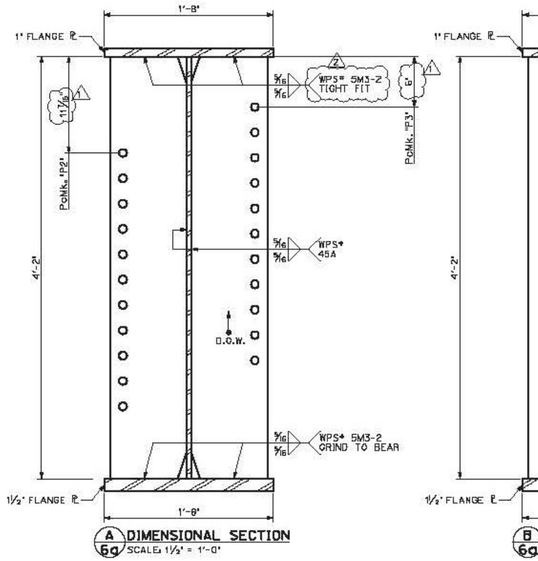


A / 6a DIMENSIONAL SECTION
SCALE: 1½" = 1'-0"

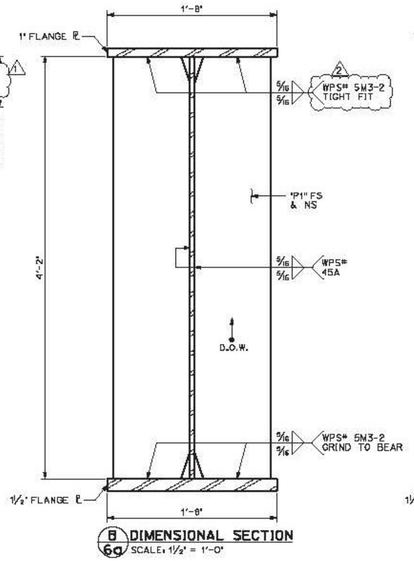


B / 6a DIMENSIONAL SECTION
SCALE: 1½" = 1'-0"

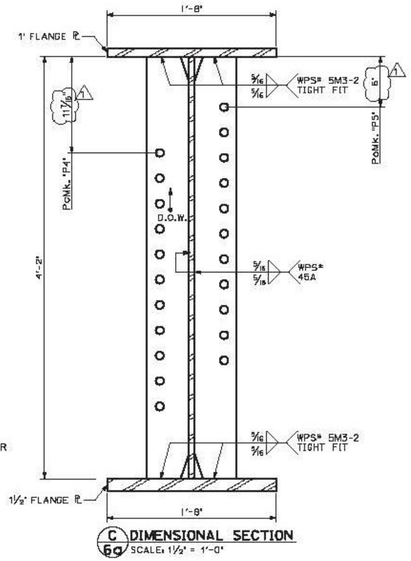


C / 6a DIMENSIONAL SECTION
SCALE: 1½" = 1'-0"

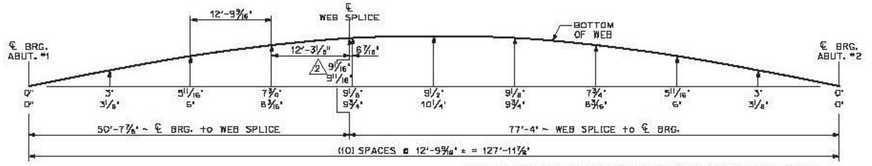


GIRDER "G11" CAMBER

THE TWO CAMBER DIMENSIONS SHOWN REPRESENT THE FOLLOWING:
TOP DIMENSION ~ TOTAL CAMBER IN FINISHED BEAM IN A NO-LOAD POSITION
BTM. DIMENSION ~ TOTAL CAMBER IN BEAM @ TIME OF FABRICATION

## BILL OF MATERIALS

| SHIP | SHIP MARK | NO. PCS. | PIECE MARK | DESCRIPTION | LENGTH | REMARKS | MAT'L | |
|---|---|---|---|---|---|---|---|---|
| 1 | G11 | | | BRIDGE GIRDER ASSEMBLY | 133'-5½" | 38,225# | | |
| | | 1 | WP9 | ℄ ⅝" x 50" | 53'-4¼" | 5700# | CVN | 2 LENGTH VERIFIED |
| | | 1 | WP10 | ℄ ⅝" x 50" | 80'-1⅜" | 8550# | CVN | |
| | | 1 | TF9 | ℄ 1" x 20" | 80'-1" | 5475# | CVN | |
| | | 1 | TF10 | ℄ 1" x 20 | 53'-4¾" | 3650# | CVN | |
| | | 1 | BF9 | ℄ 1½" x 20" | 80'-0⅛" | 8200# | CVN | |
| | | 1 | BF10 | ℄ 1½" x 20" | 53'-4" | 5450# | CVN | |
| | | | | | | | | |
| | | 4 | P1 | SEE SHEET 8a 2 | | | | |
| | | 2 | P2 | SEE SHEET 8a | | | | |
| | | 2 | P3 | SEE SHEET 8a | | | | |
| | | 5 | P4 | SEE SHEET 8a | | | | |
| | | 5 | P5 | SEE SHEET 8a | | | | |
| | | | | | | | | |
| | | | | | | | | |
| | | | | | | | | |

Vermont Agency of Transportation
RECEIVED
CK'D BY RK/JC OK'D BY WL
February 17, 2015
RESUBMIT NO Approved
BY KH DATE 2-19-2015

PROJECT No. IM 091-2(79)
ITEM No. 506.55

| | | | | |
|---|---|---|---|---|
| FINISH | SSPC SP10 | | | |
| MATERIAL | AASHTO M270 (ASTM A709) GRADE 50W | | | |
| HOLES | 15/16 " Ø U.N.O. | | | |
| ELECTRODES | PER WELD PROCEDURE | | | |
| WELDS | PER WELD PROCEDURE | 2 | 2/17/14 | As noted JJH |
| SURFACE PREP | SSPC SP6 | 1 | 2/5/15 | HOLE & PLATE LOCATION JJH |
| | | NO | DATE | DESCRIPTION BY |

REVISIONS

ARC
ADVANCED RESOURCES & CONST. ENTERPRISES, INCORPORATED
P.O. BOX 120 KINGFIELD, ME. 04947
PHONE: (207) 265-2646 – FAX: (207) 265-4054

| | | | |
|---|---|---|---|
| DRAFTER | JJH | SOUTHBOUND GIRDER "G11" 2 | PROJECT NO. 14-180 |
| DATE | JAN. 2015 | HARTFORD, VT I-91 SB OVER US RTE 5 PROJECT NUMBER IM 091-2(79) | |
| CHECKED | GNM | | DWG. NO. 6a |
| DATE | JAN. 2015 | PCL CIVIL CONSTRUCTORS | |

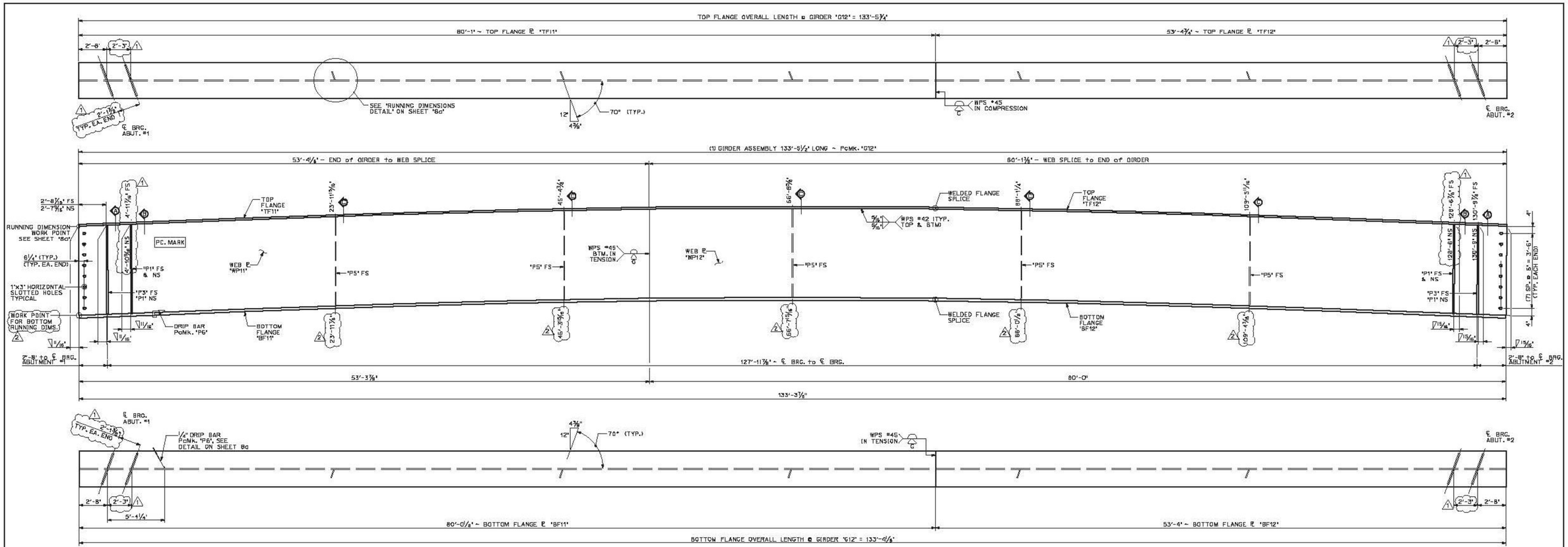


2 SHIP MARK CHANGED FROM 'G6' TO 'G12'. TYPICAL ALL APPLICABLE DETAILS

## 1 7a DIMENSIONAL PLANS & ELEVATIONS ~ GIRDER 'G12'

HORIZONTAL SCALE: 1/4" = 1'-0"
VERTICAL SCALE EXAGGERATED 2:1

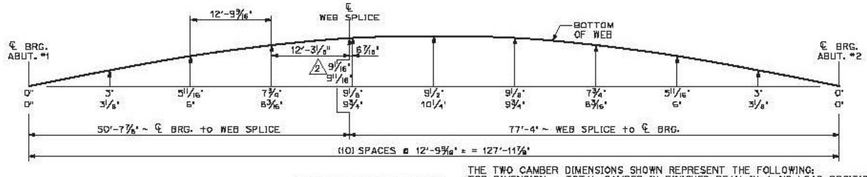


**GIRDER 'G12' CAMBER**

THE TWO CAMBER DIMENSIONS SHOWN REPRESENT THE FOLLOWING:
TOP DIMENSION ~ TOTAL CAMBER IN FINISHED BEAM IN A NO-LOAD POSITION
BTM. DIMENSION ~ TOTAL CAMBER IN BEAM @ TIME OF FABRICATION

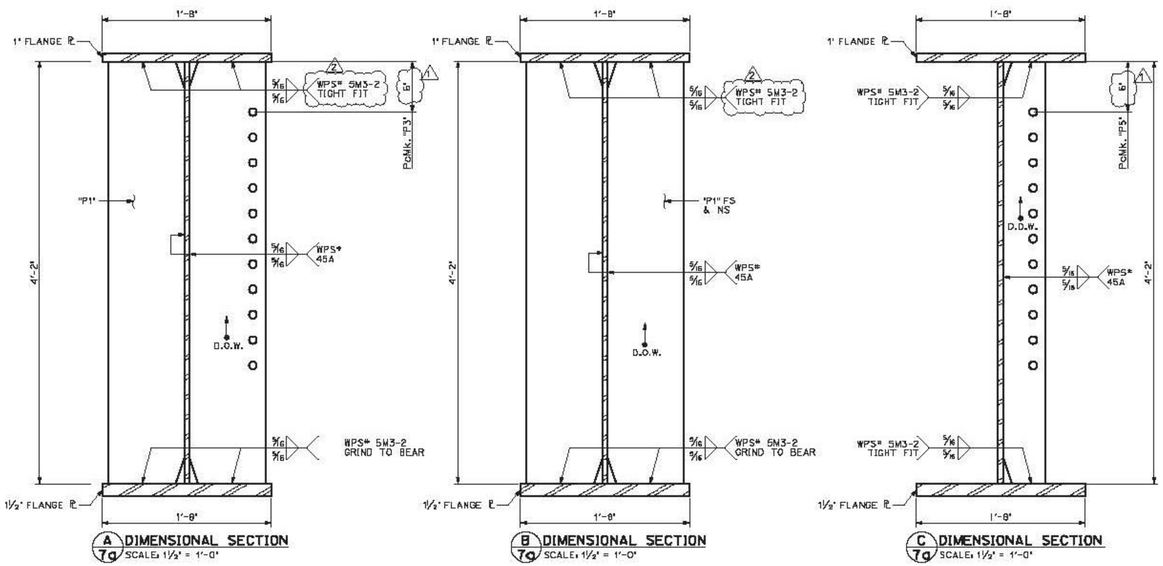


## BILL OF MATERIALS

| SHIP | SHIP MARK | NO. PCS. | PIECE MARK | DESCRIPTION | LENGTH | REMARKS | MAT'L | |
|---|---|---|---|---|---|---|---|---|
| 1 | G12 | | | BRIDGE GIRDER ASSEMBLY | 133'-5½" | 38,100# | | |
| | | 1 | WP11 | ℄ 5/8" x 50" | 53'-4¼" | 5700# | CVN | 2 LENGTH VERIFIED |
| | | 1 | WP12 | ℄ 5/8" x 50" | 80'-1⅜" | 8550# | CVN | |
| | | 1 | TF11 | ℄ 1" x 20" | 80'-1" | 5475# | CVN | |
| | | 1 | TF12 | ℄ 1" x 20 | 53'-4¾" | 3650# | CVN | |
| | | 1 | BF11 | ℄ 1½" x 20" | 80'-0⅛" | 8200# | CVN | |
| | | 1 | BF12 | ℄ 1½" x 20" | 53'-4" | 5450# | CVN | |
| | | | | | | | | |
| | | 6 | P1 | SEE SHEET 8a 2 | | | | |
| | | 2 | P3 | SEE SHEET 8a | | | | |
| | | 5 | P5 | SEE SHEET 8a | | | | |
| | | | | | | | | |
| | | 1 | P6 | ℄ ¼" x 3½" DRIP BAR | | | | |

Vermont Agency of Transportation

**RECEIVED**

CK'D BY RKJC OK'D BY WL

February 17, 2015

RESUBMIT NO Approved

BY KH DATE 2-19-2015

PROJECT No. IM 091-2(79)
ITEM No. 506.55

| | | | | |
|---|---|---|---|---|
| FINISH | 1 SSPC SP10 | | | |
| MATERIAL | AASHTO M270 (ASTM A709) GRADE 50W | | | |
| HOLES | 15/16 " Ø U.N.O. | | | |
| ELECTRODES | PER WELD PROCEDURE | | | |
| WELDS | PER WELD PROCEDURE | 2 2/17/14 | As noted | JJH |
| SURFACE PREP | SSPC SP6 | 1 2/5/15 | HOLE & PLATE LOCATION | JJH |
| | | NO DATE | DESCRIPTION | BY |

REVISIONS

ARC BRIDGES, INC.
ADVANCED RESOURCES & CONST. ENTERPRISES, INCORPORATED
P.O. BOX 120 KINGFIELD, ME. 04947
PHONE: (207) 265-2646 – FAX: (207) 265-4054

| | |
|---|---|
| DRAFTER JJH | SOUTHBOUND GIRDER 'G12' 2 |
| DATE JAN. 2015 | HARTFORD, VT I-91 SB OVER US RTE 5 |
| CHECKED GNM | PROJECT NUMBER IM 091-2(79) |
| DATE JAN. 2015 | PCL CIVIL CONSTRUCTORS |

PROJECT NO. 14-180

DWG. NO. 7a

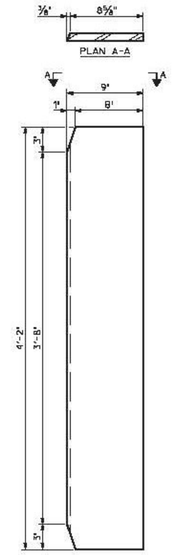


**1" BEARING ℄, PcMk. "P1"**
SCALE: 1½" = 1'-0"
FOR USE ON FASCIA GIRDERS @ ABUTMENTS & AS LATERAL SLIDE BEARING STIFFENER

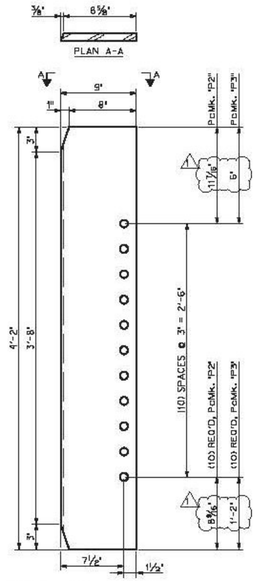


**1" BEARING ℄, PcMk. VARIES**
SCALE: 1½" = 1'-0"
FOR USE @ ABUTMENTS

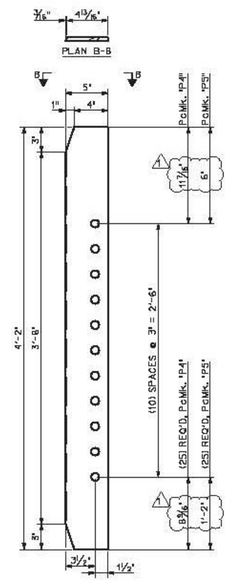


**½" CONNECTION ℄, PcMk. VARIES**
SCALE: 1½" = 1'-0"
FOR USE @ INTERMEDIATE DIAPHRAGM CONNECTIONS

## SOUTHBOUND BOLT SCHEDULE

| NO. BOLTS | PIECE MARK | LENGTH | DESCRIPTION | LOCATION |
|---|---|---|---|---|
| 220 | FB1 | 3" | ⅞"ϕ BOLT w/N&W and DTI (WEATHERING) ASTM A325, TYPE 3 | ABUTMENT DIAPHRAGMS |
| 550 | FB2 | 2½" | ⅞"ϕ BOLT w/N&W and DTI (WEATHERING) ASTM A325, TYPE 3 | INTERMEDIATE DIAPHRAGMS |

2 FABRICATOR SHALL SUPPLY (3) TEST ASSEMBLIES OF EACH BOLT LENGTH per SPECIFICATIONS.

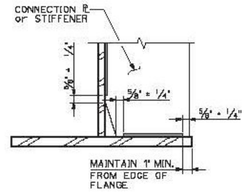


**TYPICAL CONNECTION ℄ WELD TERMINATION DETAIL**
N.T.S.

## BILL OF MATERIALS

| SHIP | SHIP MARK | NO. PCS. | PIECE MARK | DESCRIPTION | LENGTH | WEIGHT | MATERIAL |
|---|---|---|---|---|---|---|---|
| 28 | P1 | | | ℄ 1" x 9" | 4'-2" | 130# EACH | |
| 10 | P2 | | | ℄ 1" x 9" | 4'-2" | 130# EACH | |
| 10 | P3 | | | ℄ 1" x 9" | 4'-2" | 130# EACH | |
| 25 | P4 | | | ℄ ½" x 5" | 4'-2" | 40# EACH | |
| 25 | P5 | | | ℄ ½" x 5" | 4'-2" | 40# EACH | |
| 2 | P6 | | | ℄ ¼" x 3½" DRIP BARS | 1'-1 3/16" | 5# EACH | |

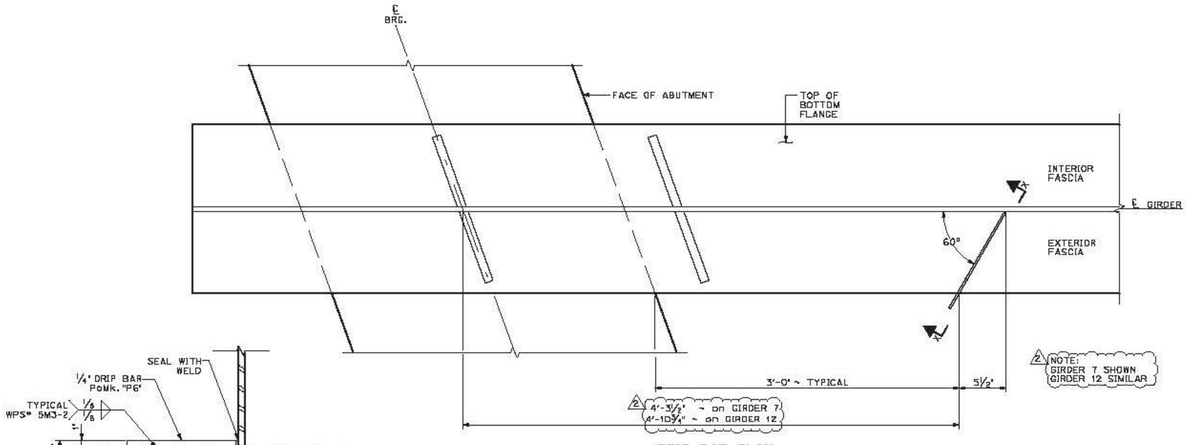


**DRIP BAR PLAN**




**X 8a DRIP BAR SECTION**
SCALE: 1½" = 1'-0"

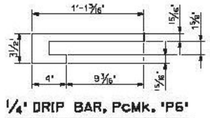


**¼" DRIP BAR, PcMk. "P6"**
SCALE: 1½" = 1'-0"

2 DIMENSIONS FOR PcMk. "P6" HAVE NOT BEEN REVISED. THE ℄ USED FOR THE DRIP BAR INCLUDE A 1/16" TOLERANCE ON THE TOP AND THE BOTTOM OF THE FLANGE TO FACILITATE INSTALLATION.

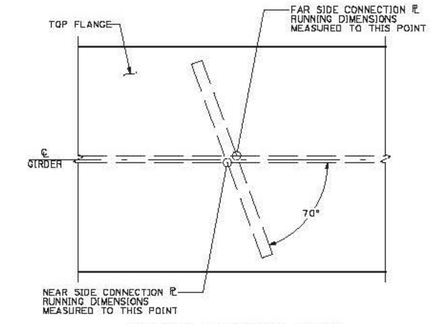


**RUNNING DIMENSIONS DETAIL**
SCALE: 2"= 1'-0"

Vermont Agency of Transportation
**RECEIVED**
CK'D BY RKJC OK'D BY WL
February 17, 2015
RESUBMIT NO Approved
BY KH DATE 2-19-2015

**PROJECT No. IM 091-2(79)**
**ITEM No. 506.55**

| | | | | | |
|---|---|---|---|---|---|
| FINISH | 1 SSPC SP10 | | | | |
| MATERIAL | AASHTO M270 (ASTM A709) GRADE 50W | | | | |
| HOLES | 15/16 " Ø U.N.O. | | | | |
| ELECTRODES | PER WELD PROCEDURE | | | | |
| WELDS | PER WELD PROCEDURE | 2 | 2/17/14 | As noted | JJH |
| SURFACE PREP | SSPC SP6 | 1 | 2/5/15 | HOLE LOCATION | JJH |
| | | NO | DATE | DESCRIPTION | BY |
| | | REVISIONS | | | |

ARC STAFFORD, PE
ADVANCED RESOURCES & CONST. ENTERPRISES, INCORPORATED
P.O. BOX 120 KINGFIELD, ME. 04947
PHONE: (207) 265-2646 – FAX: (207) 265-4034

| | |
|---|---|
| DRAFTER | JJH |
| DATE | JAN. 2015 |
| CHECKED | GNM |
| DATE | JAN. 2015 |

**SOUTHBOUND MISCELLANEOUS DETAILS**
HARTFORD, VT I-91 SB OVER US RTE 5
PROJECT NUMBER IM 091-2(79)
SC: **PCL CIVIL CONSTRUCTORS**

PROJECT NO. 14-180
DWG. NO. 8a

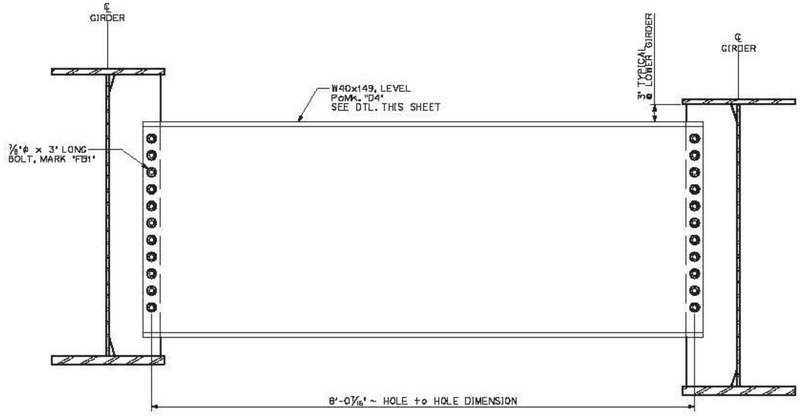


A 9a **'D4' TYPE DIAPHRAGMS**
SCALE: 1" = 1'-0"
FOR USE @ ABUTMENT LOCATIONS

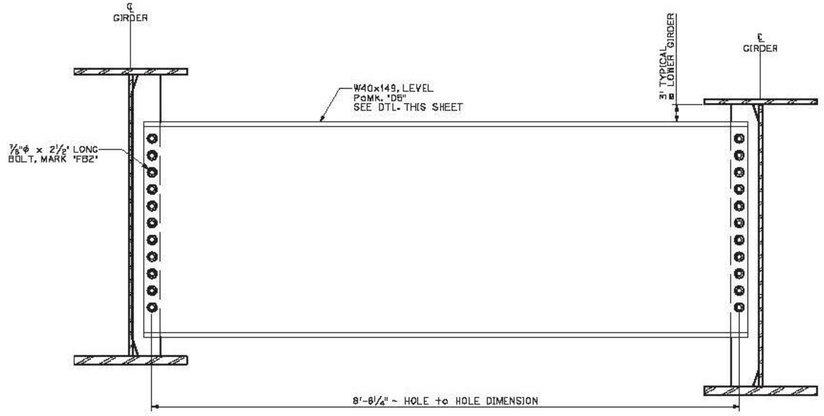


B 9a **'D5' TYPE DIAPHRAGMS**
SCALE: 1" = 1'-0"
FOR USE @ INTERMEDIATE LOCATIONS

**BILL OF MATERIALS**

| SHIP | SHIP MARK | NO. PCS. | PIECE MARK | DESCRIPTION | LENGTH | WEIGHT | MATERIAL |
|---|---|---|---|---|---|---|---|
| 10 | D4 | | | ABUTMENT DIAPHRAGM | | | |
| | | 10 | -- | W140x149 | 8'-3⁷⁄₁₆" | 1240# EACH | |
| | | | | | | | |
| 25 | D5 | | | INTERMEDIATE DIAPHRAGM | | | |
| | | 25 | -- | W140x149 | 8'-11¼" | 1340# EACH | |

2 PIECE MARK "D1" CHANGED TO "D4". TYPICAL ALL APPLICABLE DETAILS.

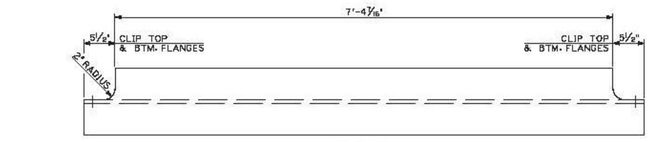


PLAN A-A

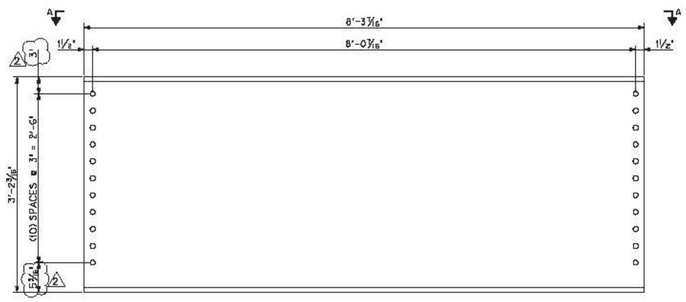


**W40x149 DIAPHRAGM, PcMk. "D4"**
SCALE: 1"=1'-0"

2 PIECE MARK "D2" CHANGED TO "D5". TYPICAL ALL APPLICABLE DETAILS.

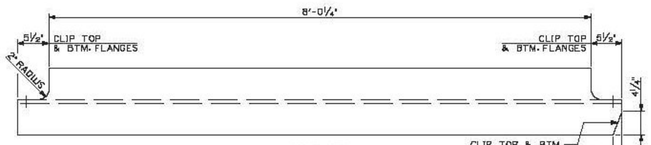


PLAN B-B

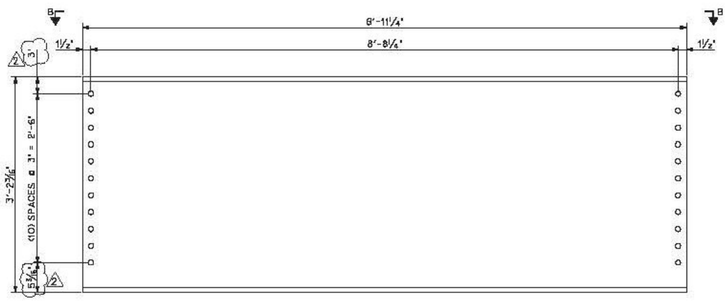


**W40x149 DIAPHRAGM, PcMk. "D5"**
SCALE: 1"=1'-0"

Vermont Agency of Transportation
**RECEIVED**
CK'D BY RK/JC OK'D BY WL
February 17, 2015
RESUBMIT NO Approved
BY KH DATE 2-19-2015

PROJECT No. IM 091-2(79)
ITEM No. 506.50

| | | | | |
|---|---|---|---|---|
| FINISH | 1 SSPC SP10 | | | |
| MATERIAL | AASHTO M270 (ASTM A709) GRADE 50W | | | |
| HOLES | 15/16 " Ø U.N.O. | | | |
| ELECTRODES | PER WELD PROCEDURE | | | |
| WELDS | PER WELD PROCEDURE | 2 | 2/17/14 | As noted JJH |
| SURFACE PREP | SSPC SP6 | 1 | 2/5/15 | HOLE LOCATION JJH |
| | | NO | DATE | DESCRIPTION BY |

REVISIONS

ARC ENGINEERS, INC.
ADVANCED RESOURCES & CONST. ENTERPRISES, INCORPORATED
P.O. BOX 120 KINGFIELD, ME. 04947
PHONE: (207) 265-2646 – FAX: (207) 265-4054

| | | | |
|---|---|---|---|
| DRAFTER | JJH | SOUTHBOUND DIAPHRAGM DETAILS | PROJECT NO. 14-180 |
| DATE | JAN. 2015 | HARTFORD, VT I-91 SB OVER US RTE 5 PROJECT NUMBER IM 091-2(79) | DWG. NO. 9a |
| CHECKED | GNM | PCL CIVIL CONSTRUCTORS | |
| DATE | JAN. 2015 | | |

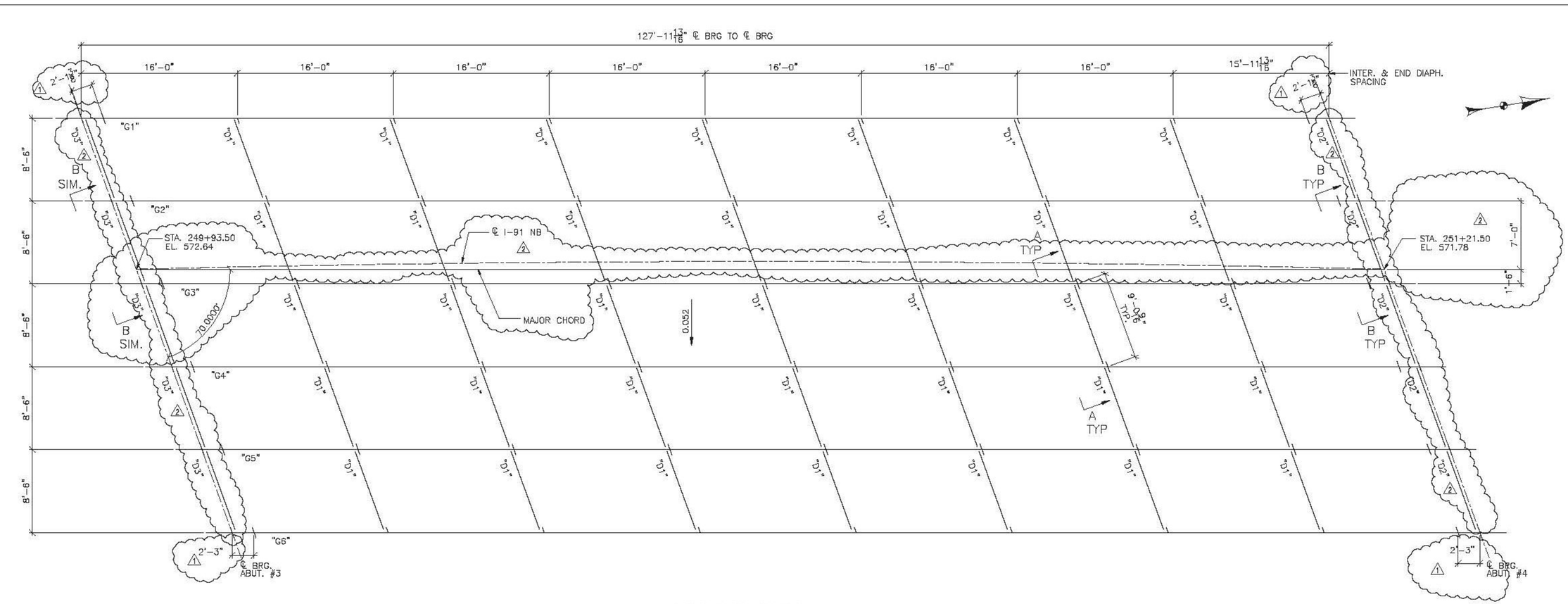


## FRAMING PLAN

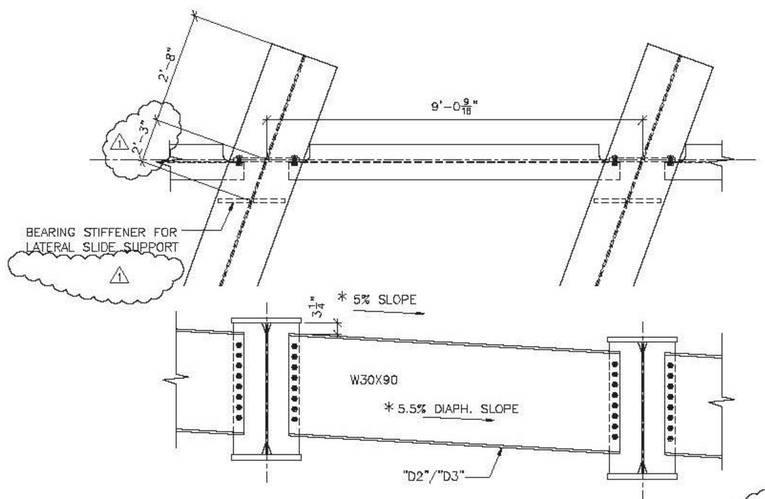


SECTION B–B

ABUT. #4 SHOWN, ABUT. #3 SIMILAR

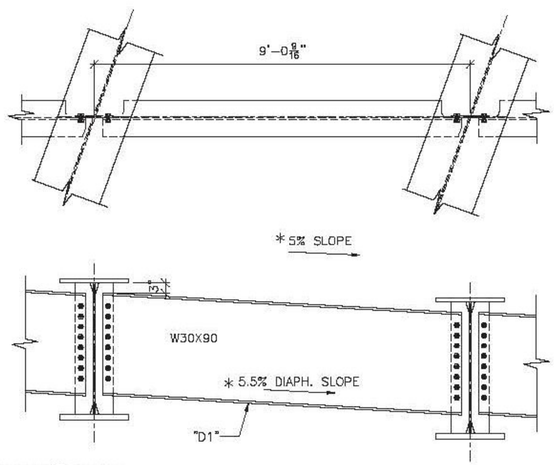


SECTION A–A

* NOTE:
DIAPHRAGM SLOPE IS CALCULATED BY USING CONNECTION HOLE LOCATIONS IN CONNECTION PLATE

FIELD BOLT LIST

| MARK | QTY. | DESCRIPTION | LOCATION |
|---|---|---|---|
| FB6 | 160 | 7/8"øX3 | END DIAPH. TO CONN./STIFF. PL |
| FB4 | 560 | 7/8"øX2 1/2 | INTER. DIAPH. TO CONN. PL |
| | 720 | DIRECT TENSION INDICATORS + THREE (3) TEST ASSEMBLIES | |

Vermont Agency of Transportation
RECEIVED
CK'D BY RKJC OK'D BY WL
February 17, 2015
RESUBMIT NO Approved
BY KH DATE 2-19-2015

| | | | | |
|---|---|---|---|---|
| FINISH | | | | |
| MATERIAL | SEE DETAIL SHEETS | | | |
| HOLES | | | | |
| ELECTRODES | | | | |
| WELDS | PER WPS | 2 | 2/13/15 | AS NOTED JAC |
| SURFACE PREP | | 1 | 1/29/15 | AS NOTED JAC |
| | | NO | DATE | DESCRIPTION BY |

REVISIONS

ARC ENTERPRISES, INC.

ADVANCED RESOURCES & CONST. ENTERPRISES, INCORPORATED
P.O. BOX 120 KINGFIELD, ME. 04947
PHONE: (207) 265-2646 – FAX: (207) 265-4054

| | | | |
|---|---|---|---|
| DRAFTER JAC | FRAMING PLAN | | PROJECT NO. 14-180 |
| DATE 1/05/15 | HARTFORD, VT I-91 NB OVER US RTE. 5 PROJECT NUMBER IM 091-2(79) | | |
| CHECKED CNM | GC: PCL CIVIL CONSTRUCTORS | | DWG. NO. 1 |
| DATE 1/14/15 | | | |

J.A.C. DRAFTING/S45B14/1

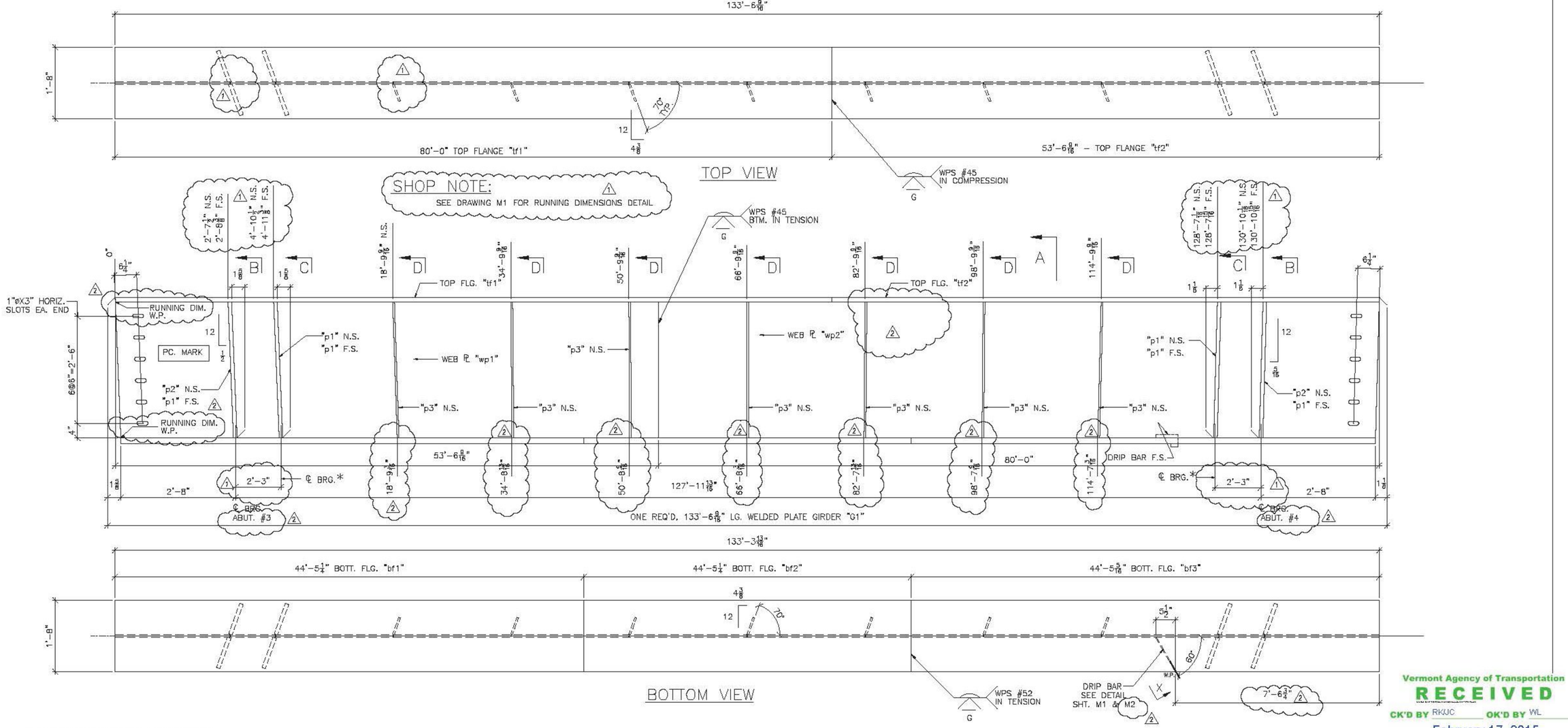





* STIFFENER FOR LATERAL SLIDE SUPPORT

## BILL OF MATERIAL

| SHIP | SHIP MARK | NO. PCS. | PIECE MARK | DESCRIPTION | LENGTH | REMARKS | WT. |
|---|---|---|---|---|---|---|---|
| 1 | G1 | | | WELDED PLATE GIRDER | | | 37866 |
| | | 1 | wp1 | ℄ 5/8X38 | 53'-6 9/16 | CVN | 4328 |
| | | 1 | wp2 | ℄ 5/8X38 | 80'-0 | CVN | 6466 |
| | | 1 | tf1 | ℄ 1 1/2X20 | 80'-0 | CVN | 6806 |
| | | 1 | tf2 | ℄ 1 1/2X20 | 53'-6 9/16 | CVN | 4556 |
| | | 1 | bf1 | ℄ 1 3/4X20 | 44'-5 1/4 | CVN | 4915 |
| | | 1 | bf2 | ℄ 1 3/4X20 | 44'-5 1/4 | CVN | 4915 |
| | | 1 | bf3 | ℄ 1 3/4X20 | 44'-5 5/16 | CVN | 4915 |
| | | 2 | | | | | |
| | | 6 | p1 | SEE SHT. M2 | | | |
| | | 2 | p2 | SEE SHT. M2 | | | |
| | | 7 | p3 | SEE SHT. M2 | | | |
| | | 1 | dp1 | 1/4" THK. DRIP BAR SEE SHT. M1 & M2 | | | |

BOTTOM FLANGE ℄ MATERIAL SHALL BE ASTM A709 GR. HPS 70W

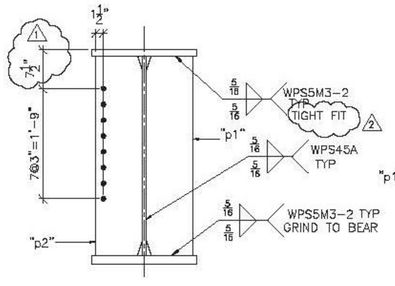


SECTION B

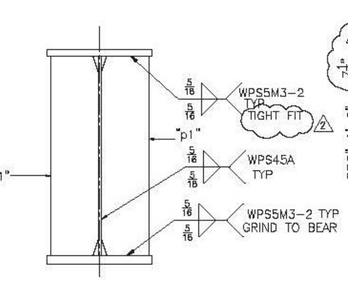


SECTION C

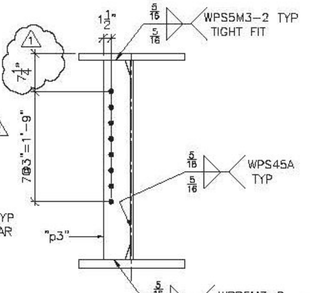


SECTION D

SEE SHEET M1 FOR CAMBER AND SECTIONS & DETAILS NOT SHOWN

Vermont Agency of Transportation
RECEIVED
CK'D BY RKJC OK'D BY WL
February 17, 2015
RESUBMIT NO Approved
BY KH DATE 2-19-2015

SHOP NOTE:
ENTIRE TOP FLANGE IS IN COMPRESSION
ENTIRE BOTT FLANGE IS IN TENSION

| | | | | |
|---|---|---|---|---|
| FINISH SSPC SP10 1 | | | | |
| MATERIAL AASHTO M270 (ASTM A709) GR. 50W U.O.N. | | | | |
| HOLES 15/16"ø U.O.N. | | | | |
| ELECTRODES | | | | |
| WELDS PER WPS | 2 | 2/13/15 | AS NOTED | JAC |
| SURFACE PREP | 1 | 1/29/15 | AS NOTED | JAC |
| | NO | DATE | DESCRIPTION | BY |
| | REVISIONS | | | |


ARC ENTERPRISES, INC.
ADVANCED RESOURCES & CONST. ENTERPRISES, INCORPORATED
P.O. BOX 120 KINGFIELD, ME. 04947
PHONE: (207) 265-2646 - FAX: (207) 265-4054


| | |
|---|---|
| DRAFTER JAC | STRINGER DETAILS, G1 |
| DATE 1/6/15 | HARTFORD, VT I-91 NB OVER US RTE. 5 |
| CHECKED JS | PROJECT NUMBER IM 091-2(79) |
| DATE 1/14/15 | G.C. PCL CIVIL CONSTRUCTORS |
| | PROJECT NO. 14-180 |
| | DWG. NO. 2 |

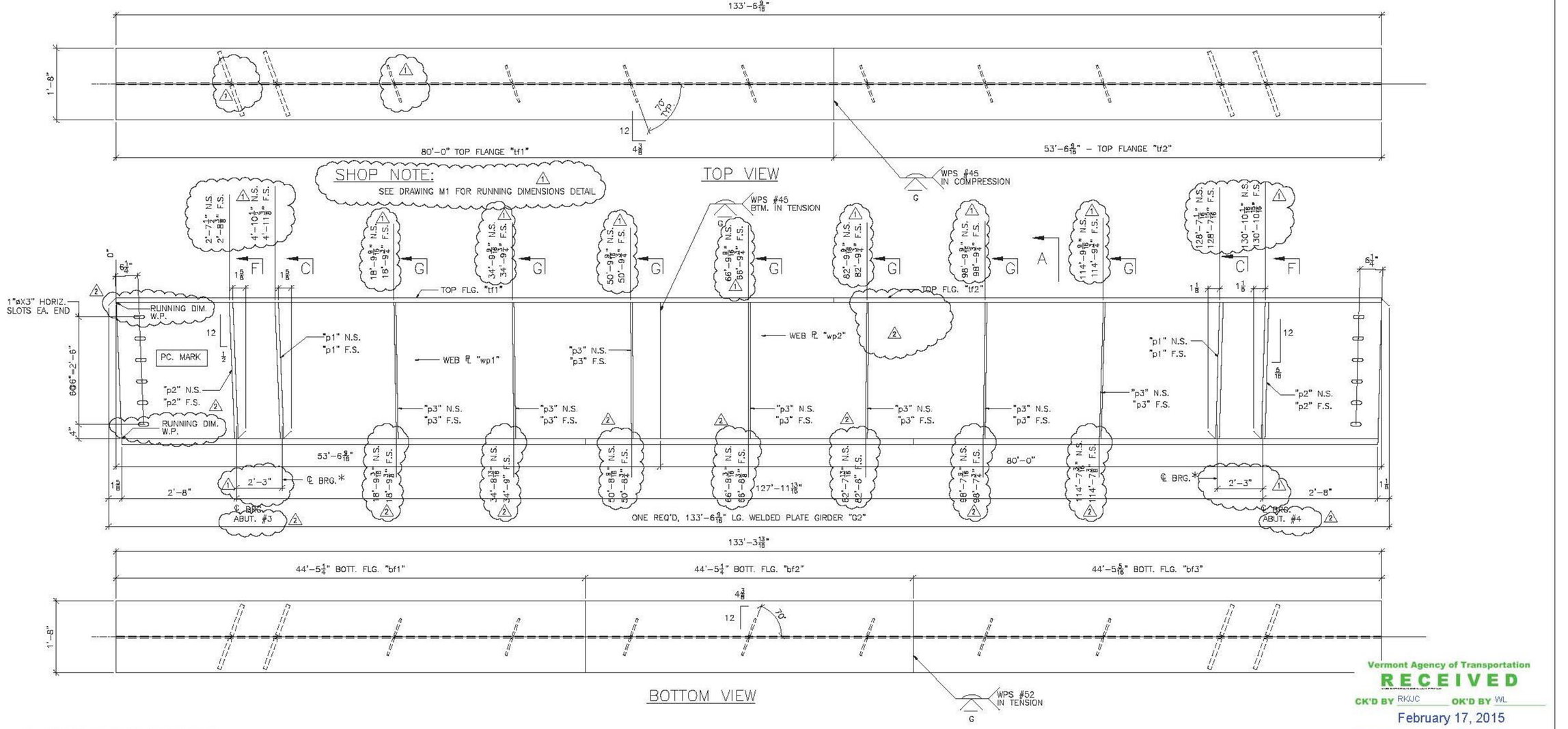


* STIFFENER FOR LATERAL SLIDE SUPPORT

## BILL OF MATERIAL

| SHIP | SHIP MARK | NO. PCS. | PIECE MARK | DESCRIPTION | LENGTH | REMARKS | WT. | |
|---|---|---|---|---|---|---|---|---|
| 1 | G2 | | | WELDED PLATE GIRDER | | | 38055 | |
| | | 1 | wp1 | ℄ 9/16X38 | 53'-6 9/16 | CVN | 4328 | |
| | | 1 | wp2 | ℄ 9/16X38 | 80'-0 | CVN | 6466 | |
| | | 1 | tf1 | ℄ 1 1/2X20 | 80'-0 | CVN | 6806 | BOTTOM FLANGE ℄ MATERIAL SHALL BE ASTM A709 GR. HPS 70W |
| | | 1 | tf2 | ℄ 1 1/2X20 | 53'-6 9/16 | CVN | 4556 | |
| | | 1 | bf1 | ℄ 1 5/8X20 | 44'-5 1/4 | CVN | 4915 | |
| | | 1 | bf2 | ℄ 1 5/8X20 | 44'-5 1/4 | CVN | 4915 | |
| | | 1 | bf3 | ℄ 1 5/8X20 | 44'-5 5/16 | CVN | 4915 | |
| | | 2 | | | | | | |
| | | 4 | p1 | SEE SHT. M2 | | | | |
| | | 4 | p2 | SEE SHT. M2 | | | | |
| | | 14 | p3 | SEE SHT. M2 | | | | |

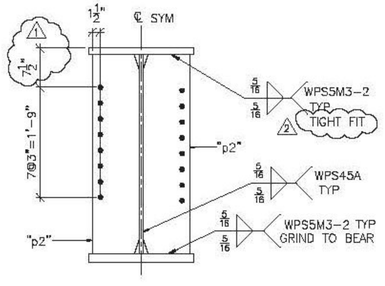


SECTION F

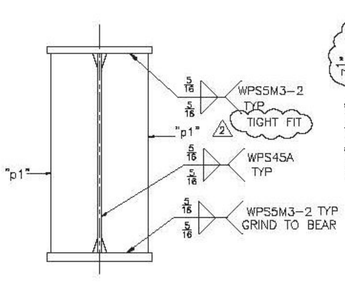


SECTION C

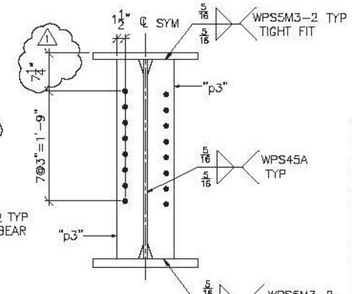


SECTION G

SEE SHEET M1 FOR CAMBER AND SECTIONS & DETAILS NOT SHOWN

Vermont Agency of Transportation
**RECEIVED**
CK'D BY RKJC OK'D BY WL
February 17, 2015
RESUBMIT NO Approved
BY KH DATE 2-19-2015

SHOP NOTE:
ENTIRE TOP FLANGE IS IN COMPRESSION
ENTIRE BOTT FLANGE IS IN TENSION

| | | | | |
|---|---|---|---|---|
| FINISH SSPC SP10 | 1 | | | |
| MATERIAL AASHTO M270 (ASTM A709) GR. 50W U.O.N. | | | | |
| HOLES 15/16"ø U.O.N. | | | | |
| ELECTRODES | | | | |
| WELDS PER WPS | 2 | 2/13/15 | AS NOTED | JAC |
| SURFACE PREP | 1 | 1/29/15 | AS NOTED | JAC |
| | NO | DATE | REVISIONS | BY |


ARC ENTERPRISES, INC.
ADVANCED RESOURCES & CONST. ENTERPRISES, INCORPORATED
P.O. BOX 120 KINGFIELD, ME. 04947
PHONE: (207) 265-2646 - FAX: (207) 265-4054


| | | | |
|---|---|---|---|
| DRAFTER JAC | STRINGER DETAILS, G2 | PROJECT NO. | |
| DATE 1/6/15 | HARTFORD, VT I-91 NB OVER US RTE. 5 PROJECT NUMBER IM 091-2(79) | 14-180 | |
| CHECKED JS | G.C. PCL CIVIL CONSTRUCTORS | DWG. NO. | |
| DATE 1/14/15 | | 3 | |

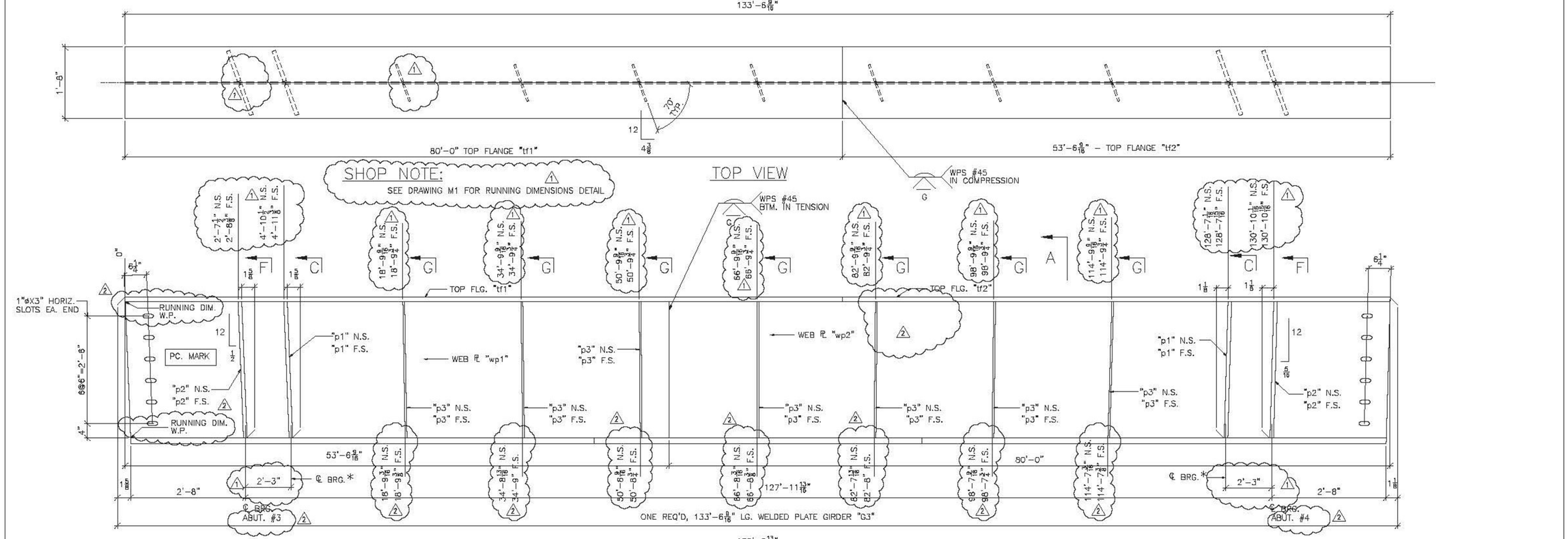


* STIFFENER FOR LATERAL SLIDE SUPPORT

## BILL OF MATERIAL

| SHIP | SHIP MARK | NO. PCS. | PIECE MARK | DESCRIPTION | LENGTH | REMARKS | WT. | |
|---|---|---|---|---|---|---|---|---|
| 1 | G3 | | | WELDED PLATE GIRDER | | | 38055 | |
| | | 1 | wp1 | ℄ 5/16X38 | 53'-6 9/16 | CVN | 4328 | |
| | | 1 | wp2 | ℄ 5/16X38 | 80'-0 | CVN | 6466 | |
| | | 1 | tf1 | ℄ 1 1/2X20 | 80'-0 | CVN | 6806 | |
| | | 1 | tf2 | ℄ 1 1/2X20 | 53'-6 9/16 | CVN | 4556 | |
| | | 1 | bf1 | ℄ 1 5/8X20 | 44'-5 1/4 | CVN | 4915 | BOTTOM FLANGE ℄ MATERIAL SHALL BE ASTM A709 GR. HPS 70W |
| | | 1 | bf2 | ℄ 1 5/8X20 | 44'-5 1/4 | CVN | 4915 | |
| | | 1 | bf3 | ℄ 1 5/8X20 | 44'-5 5/16 | CVN | 4915 | |
| | | 2 | | | | | | |
| | | 4 | p1 | SEE SHT. M2 | | | | |
| | | 4 | p2 | SEE SHT. M2 | | | | |
| | | 14 | p3 | SEE SHT. M2 | | | | |

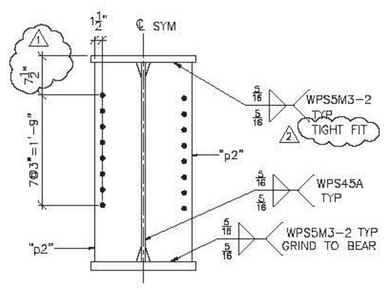


SECTION F

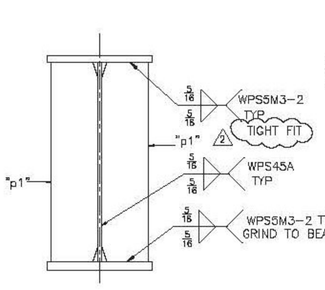


SECTION C

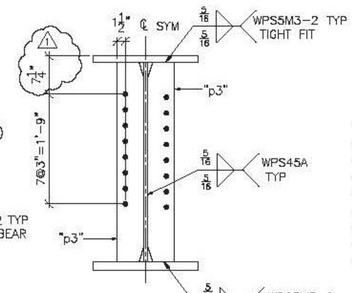


SECTION G

SEE SHEET M1 FOR CAMBER AND SECTIONS & DETAILS NOT SHOWN

Vermont Agency of Transportation
RECEIVED
CK'D BY RKJC OK'D BY WL
February 17, 2015
RESUBMIT NO Approved
BY KH DATE 2-19-2015

SHOP NOTE:
ENTIRE TOP FLANGE IS IN COMPRESSION
ENTIRE BOTT FLANGE IS IN TENSION

| | | | | |
|---|---|---|---|---|
| FINISH SSPC SP10 1 | | | | |
| MATERIAL AASHTO M270 (ASTM A709) GR. 50W U.O.N. | | | | |
| HOLES 15/16"ø U.O.N. | | | | |
| ELECTRODES | | | | |
| WELDS PER WPS | 2 | 2/13/15 | AS NOTED | JAC |
| SURFACE PREP | 1 | 1/29/15 | AS NOTED | JAC |
| | NO | DATE | DESCRIPTION | BY |
| | REVISIONS | | | |


ARC NORTHEASTERN, INC.
ADVANCED RESOURCES & CONST. ENTERPRISES, INCORPORATED
P.O. BOX 120 KINGFIELD, ME. 04947
PHONE: (207) 265-2646 – FAX: (207) 265-4054


| | | | |
|---|---|---|---|
| DRAFTER JAC | STRINGER DETAILS, G3 | | PROJECT NO. 14-180 |
| DATE 1/8/15 | HARTFORD, VT I-91 NB OVER US RTE. 5 PROJECT NUMBER IM 091-2(79) | | |
| CHECKED JS | G.C. | PCL CIVIL CONSTRUCTORS | DWG. NO. 4 |
| DATE 1/14/15 | | | |

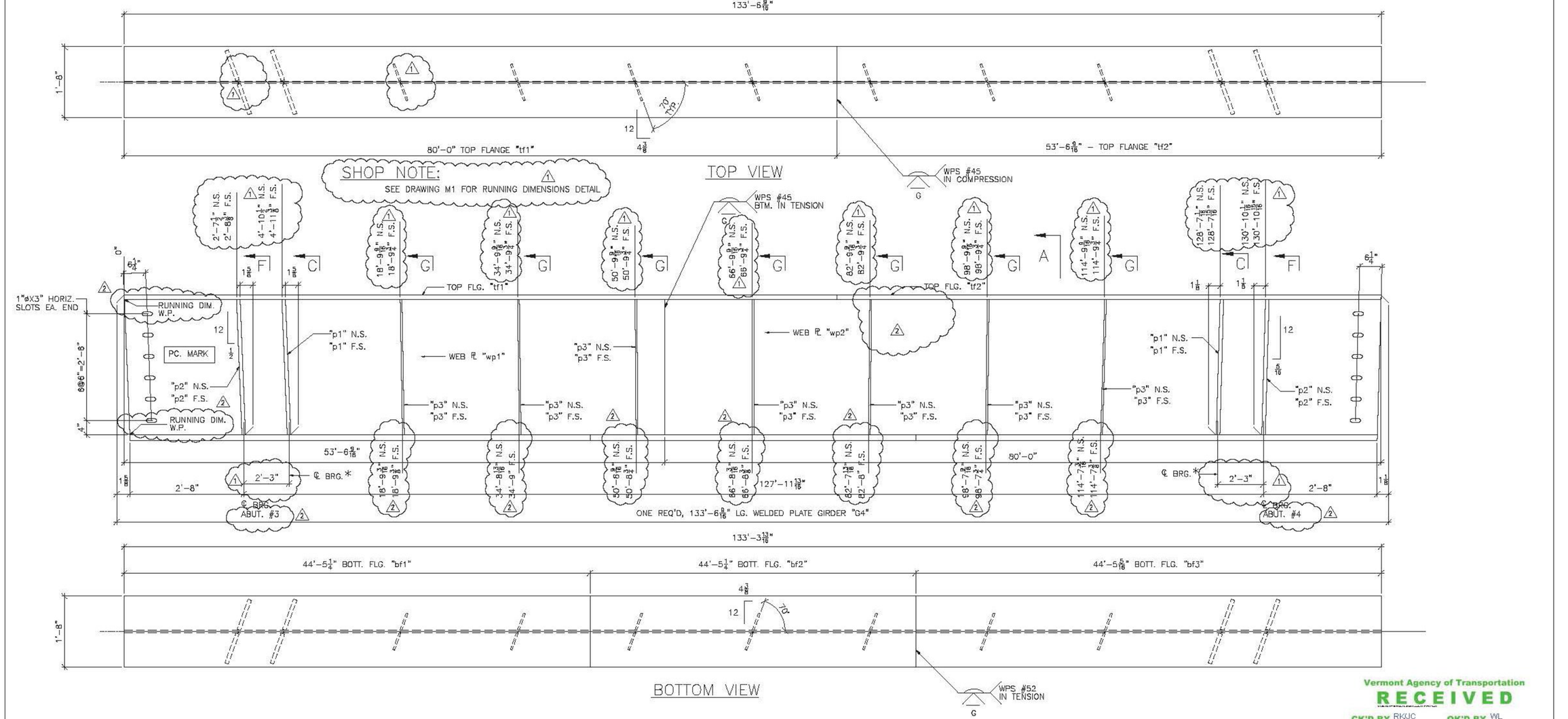


* STIFFENER FOR LATERAL SLIDE SUPPORT

## BILL OF MATERIAL

| SHIP | SHIP MARK | NO. PCS. | PIECE MARK | DESCRIPTION | LENGTH | REMARKS | WT. | |
|---|---|---|---|---|---|---|---|---|
| 1 | G4 | | | WELDED PLATE GIRDER | | | 38055 | |
| | | 1 | wp1 | PL 5/16X38 | 53'-6 9/16 | CVN | 4328 | BOTTOM FLANGE ℄ MATERIAL SHALL BE ASTM A709 GR. HPS 70W |
| | | 1 | wp2 | PL 5/16X38 | 80'-0 | CVN | 6466 | |
| | | 1 | tf1 | PL 1 1/2X20 | 80'-0 | CVN | 6806 | |
| | | 1 | tf2 | PL 1 1/2X20 | 53'-6 9/16 | CVN | 4556 | |
| | | 1 | bf1 | PL 1 5/8X20 | 44'-5 1/4 | CVN | 4915 | |
| | | 1 | bf2 | PL 1 5/8X20 | 44'-5 1/4 | CVN | 4915 | |
| | | 1 | bf3 | PL 1 5/8X20 | 44'-5 5/16 | CVN | 4915 | |
| | | 2 | | | | | | |
| | | 4 | p1 | SEE SHT. M2 | | | | |
| | | 4 | p2 | SEE SHT. M2 | | | | |
| | | 14 | p3 | SEE SHT. M2 | | | | |

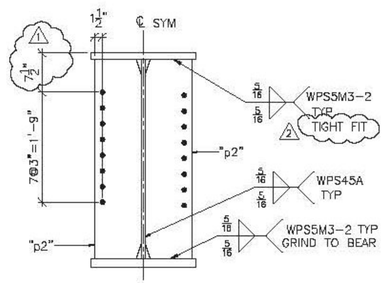


SECTION F

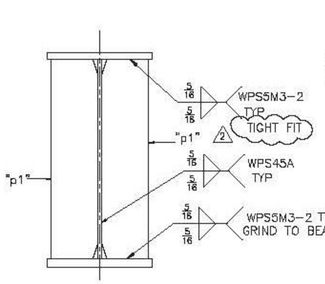


SECTION C

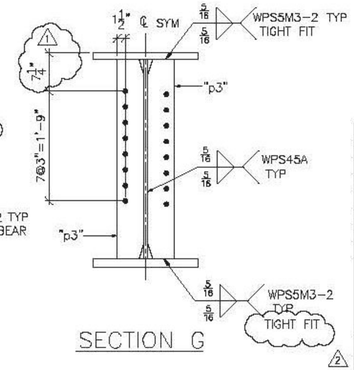


SECTION G

SEE SHEET M1 FOR CAMBER AND SECTIONS & DETAILS NOT SHOWN

Vermont Agency of Transportation
RECEIVED
CK'D BY RKJC OK'D BY WL
February 17, 2015
RESUBMIT NO Approved
BY KH DATE 2-19-2015

SHOP NOTE:
ENTIRE TOP FLANGE IS IN COMPRESSION
ENTIRE BOTT FLANGE IS IN TENSION

| | | | | |
|---|---|---|---|---|
| FINISH SSPC SP10 1 | | | | |
| MATERIAL AASHTO M270 (ASTM A709) GR. 50W U.O.N. | | | | |
| HOLES 15/16"ø U.O.N. | | | | |
| ELECTRODES | | | | |
| WELDS PER WPS | 2 | 2/13/15 | AS NOTED | JAC |
| SURFACE PREP | 1 | 1/29/15 | AS NOTED | JAC |
| | NO | DATE | DESCRIPTION | BY |
| | REVISIONS | | | |


ARC NORTHEASTERN, INC.
ADVANCED RESOURCES & CONST. ENTERPRISES, INCORPORATED
P.O. BOX 120 KINGFIELD, ME. 04947
PHONE: (207) 265-2646 – FAX: (207) 265-4054


| | | | |
|---|---|---|---|
| DRAFTER JAC | STRINGER DETAILS, G4 | | PROJECT NO. 14-180 |
| DATE 1/8/15 | HARTFORD, VT I-91 NB OVER US RTE. 5 PROJECT NUMBER IM 091-2(79) | | |
| CHECKED JS | G.C. PCL CIVIL CONSTRUCTORS | | DWG. NO. 5 |
| DATE 1/14/15 | | | |

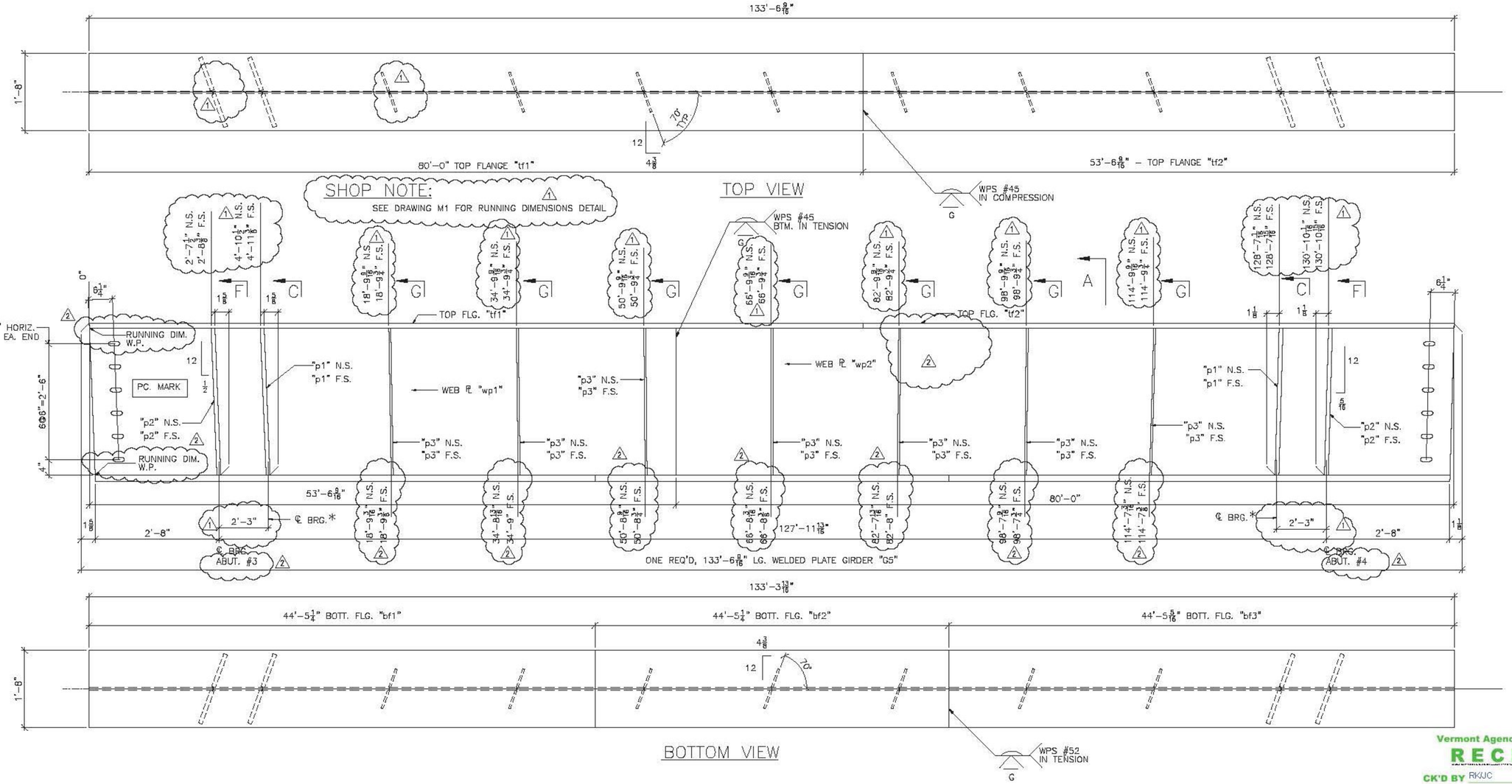


* STIFFENER FOR LATERAL SLIDE SUPPORT

## BILL OF MATERIAL

| SHIP | SHIP MARK | NO. PCS. | PIECE MARK | DESCRIPTION | LENGTH | REMARKS | WT. | |
|---|---|---|---|---|---|---|---|---|
| 1 | G5 | | | WELDED PLATE GIRDER | | | 38055 | |
| | | 1 | wp1 | PL 5/8 X38 | 53'-6 9/16 | CVN | 4328 | |
| | | 1 | wp2 | PL 5/8 X38 | 80'-0 | CVN | 6466 | |
| | | 1 | tf1 | PL 1 1/2 X20 | 80'-0 | CVN | 6806 | |
| | | 1 | tf2 | PL 1 1/2 X20 | 53'-6 9/16 | CVN | 4556 | |
| | | 1 | bf1 | PL 1 3/4 X20 | 44'-5 1/4 | CVN | 4915 | BOTTOM FLANGE PL MATERIAL SHALL BE ASTM A709 GR. HPS 70W |
| | | 1 | bf2 | PL 1 3/4 X20 | 44'-5 1/4 | CVN | 4915 | |
| | | 1 | bf3 | PL 1 3/4 X20 | 44'-5 5/16 | CVN | 4915 | |
| | | 2 | | | | | | |
| | | 4 | p1 | SEE SHT. M2 | | | | |
| | | 4 | p2 | SEE SHT. M2 | | | | |
| | | 14 | p3 | SEE SHT. M2 | | | | |

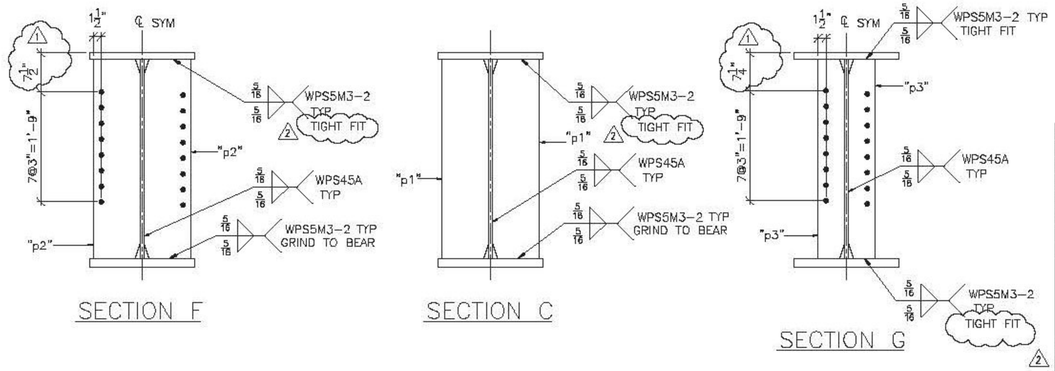


SEE SHEET M1 FOR CAMBER AND SECTIONS & DETAILS NOT SHOWN

Vermont Agency of Transportation
**RECEIVED**
CK'D BY RKJC OK'D BY WL
February 17, 2015
RESUBMIT NO Approved
BY KH DATE 2-19-2015

SHOP NOTE:
ENTIRE TOP FLANGE IS IN COMPRESSION
ENTIRE BOTT FLANGE IS IN TENSION

| | | | | | |
|---|---|---|---|---|---|
| FINISH | SSPC SP10 1 | | | | |
| MATERIAL | AASHTO M270 (ASTM A709) GR. 50W U.O.N. | | | | |
| HOLES | 15/16"ø U.O.N. | | | | |
| ELECTRODES | | | | | |
| WELDS | PER WPS | 2 | 2/13/15 | AS NOTED | JAC |
| SURFACE PREP | | 1 | 1/29/15 | AS NOTED | JAC |
| | | NO | DATE | DESCRIPTION | BY |
| | | REVISIONS | | | |

ARC ENTERPRISES, INC.


ADVANCED RESOURCES & CONST. ENTERPRISES, INCORPORATED
P.O. BOX 120 KINGFIELD, ME. 04947
PHONE: (207) 265-2546 - FAX: (207) 265-4054


| | | | |
|---|---|---|---|
| DRAFTER | JAC | STRINGER DETAILS, G5 | PROJECT NO. 14-180 |
| DATE | 1/6/15 | HARTFORD, VT I-91 NB OVER US RTE. 5 PROJECT NUMBER IM 091-2(79) | |
| CHECKED | JS | G.C. PCL CIVIL CONSTRUCTORS | DWG. NO. 6 |
| DATE | 1/14/15 | | |

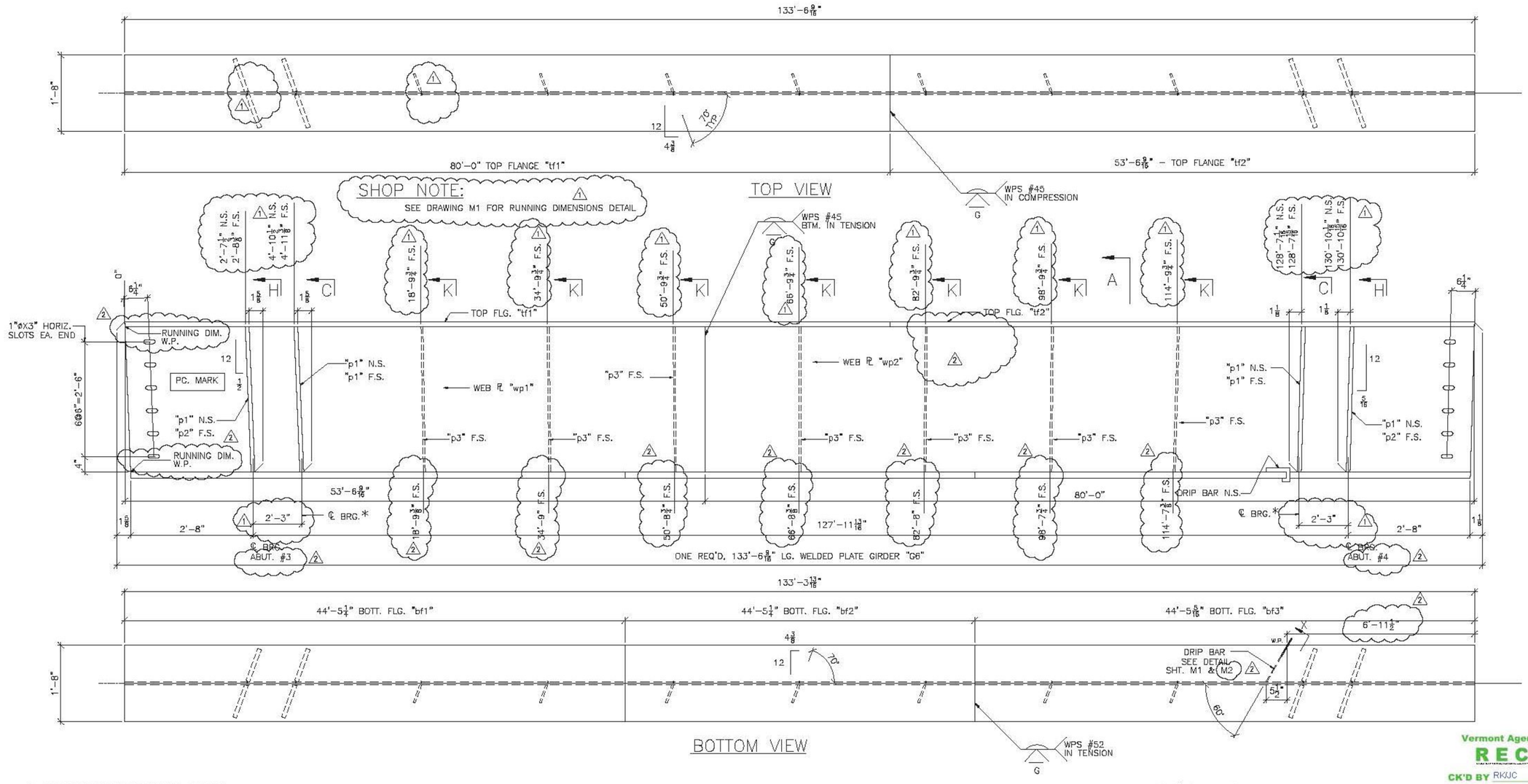


* STIFFENER FOR LATERAL SLIDE SUPPORT

## BILL OF MATERIAL

| SHIP | SHIP MARK | NO. PCS. | PIECE MARK | DESCRIPTION | LENGTH | REMARKS | WT. | |
|---|---|---|---|---|---|---|---|---|
| 1 | G6 | | | WELDED PLATE GIRDER | | | 37866 | |
| | | 1 | wp1 | PL 5/8X38 | 53'-6 9/16 | CVN | 4328 | |
| | | 1 | wp2 | PL 5/8X38 | 80'-0 | CVN | 6466 | |
| | | 1 | tf1 | PL 1 1/4X20 | 80'-0 | CVN | 6806 | |
| | | 1 | tf2 | PL 1 1/4X20 | 53'-6 9/16 | CVN | 4556 | |
| | | 1 | bf1 | PL 1 1/8X20 | 44'-5 1/4 | CVN | 4915 | BOTTOM FLANGE ℄ MATERIAL SHALL BE ASTM A709 GR. HPS 70W |
| | | 1 | bf2 | PL 1 1/8X20 | 44'-5 1/4 | CVN | 4915 | |
| | | 1 | bf3 | PL 1 1/8X20 | 44'-5 5/16 | CVN | 4915 | |
| | | 2 | | | | | | |
| | | 6 | p1 | SEE SHT. M2 | | | | |
| | | 2 | p2 | SEE SHT. M2 | | | | |
| | | 7 | p3 | SEE SHT. M2 | | | | |
| | | 2 | dp1 | 1/4" THK. DRIP BAR SEE SHT. M1 & M2 | | | | |

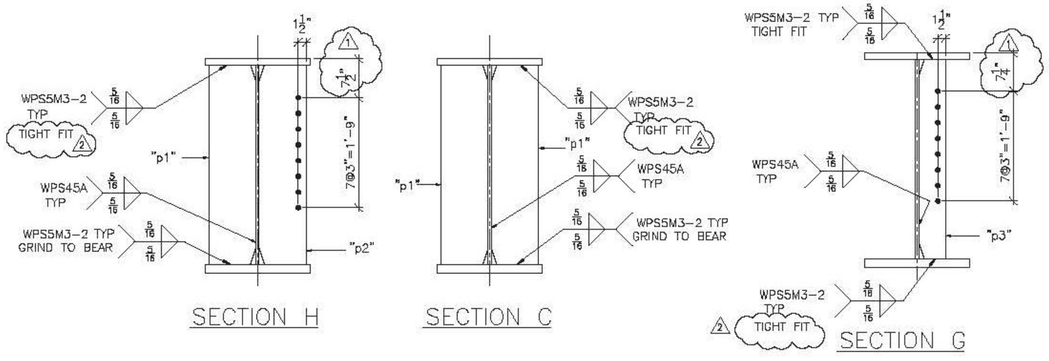


SEE SHEET M1 FOR CAMBER AND SECTIONS & DETAILS NOT SHOWN

Vermont Agency of Transportation
RECEIVED
CK'D BY RK/JC OK'D BY WL
February 17, 2015
RESUBMIT NO Approved
BY KH DATE 2-19-2015

SHOP NOTE:
ENTIRE TOP FLANGE IS IN COMPRESSION
ENTIRE BOTT FLANGE IS IN TENSION

| | | | | | |
|---|---|---|---|---|---|
| FINISH SSPC SP10 | 1 | | | | |
| MATERIAL AASHTO M270 (ASTM A709) GR. 50W U.O.N. | | | | | |
| HOLES 15/16"ø U.O.N. | | | | | |
| ELECTRODES | | | | | |
| WELDS PER WPS | 2 | 2/13/15 | AS NOTED | JAC | |
| SURFACE PREP | 1 | 1/29/15 | AS NOTED | JAC | |
| | NO | DATE | DESCRIPTION | BY | |
| | REVISIONS | | | | |


ARC ADVANCED RESOURCES & CONSTRUCTION, INC.
ADVANCED RESOURCES & CONST. ENTERPRISES, INCORPORATED
P.O. BOX 120 KINGFIELD, ME. 04947
PHONE: (207) 265-2646 - FAX: (207) 265-4054


| | | | |
|---|---|---|---|
| DRAFTER JAC | STRINGER DETAILS, G6 | PROJECT NO. | |
| DATE 1/5/15 | HARTFORD, VT I-91 NB OVER US RTE. 5 | 14-180 | |
| CHECKED JS | PROJECT NUMBER IM 091-2(79) | DWG. NO. | |
| DATE 1/14/15 | G.C. PCL CIVIL CONSTRUCTORS | 7 | |

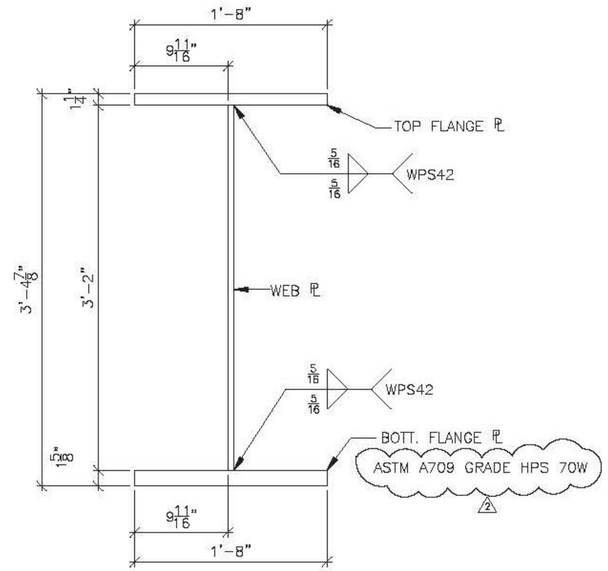


## SECTION A
(GIRDER ASS'Y)

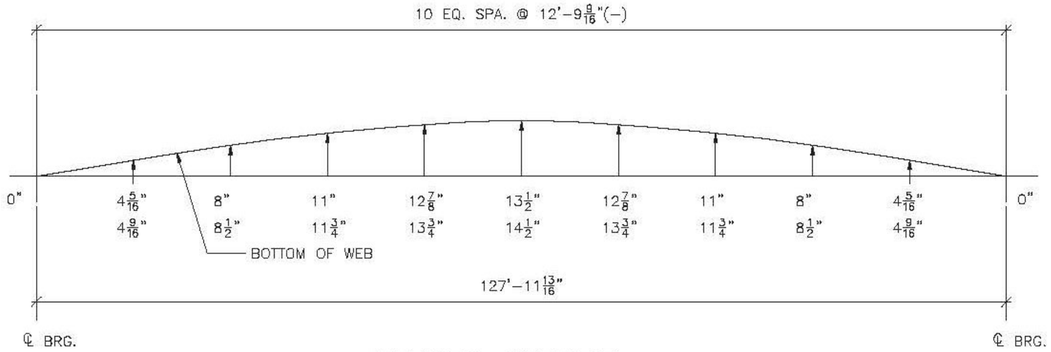


## CAMBER DIAGRAM

THE TWO CAMBER DIMENSIONS SHOWN REPRESENT THE FOLLOWING:
TOP DIMENSION – TOTAL CAMBER IN FINISHED BEAM IN A NO-LOAD POSITION
BTM. DIMENSION – TOTAL CAMBER OF WEB ℄ @ TIME OF FABRICATION

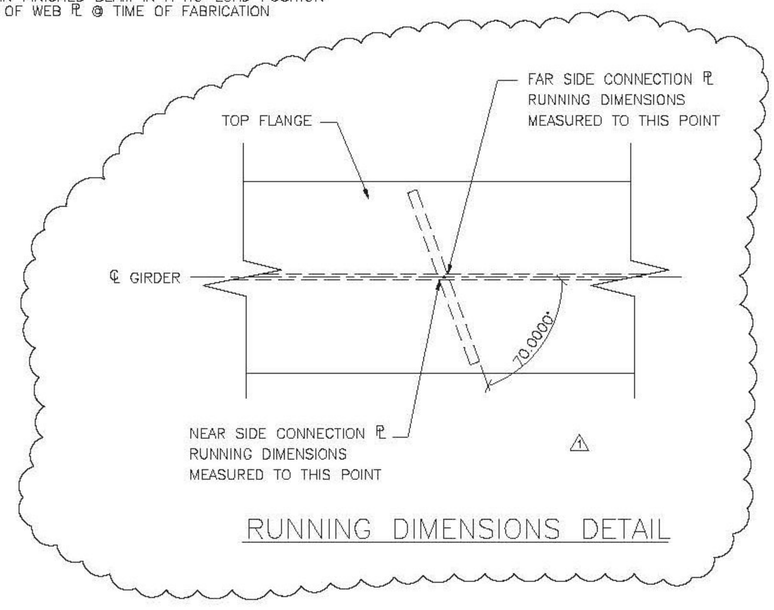


## RUNNING DIMENSIONS DETAIL

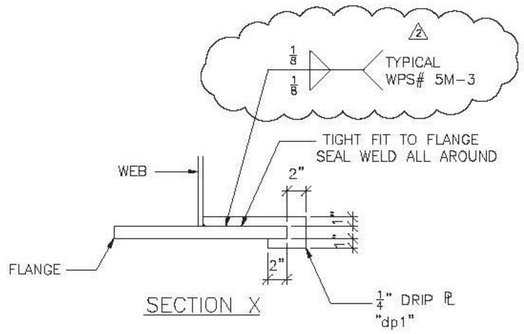


## SECTION X

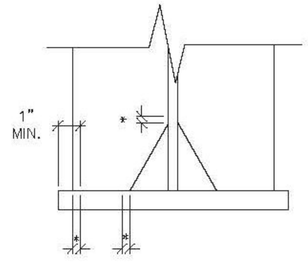


## WELD TERMINATION DETAIL

* NO WELD FOR 3/8" MIN. 7/8" MAX.

Vermont Agency of Transportation
**RECEIVED**
CK'D BY RKJJC OK'D BY WL
February 17, 2015
RESUBMIT NO Approved
BY KH DATE 2-19-2015

| | | | | | |
|---|---|---|---|---|---|
| FINISH | | | | | |
| MATERIAL | ASTM A709 GRADE 50W U.O.N. | | | | |
| HOLES | 15/16"ø U.O.N. | | | | |
| ELECTRODES | | | | | |
| WELDS | PER WPS | 2 | 2/13/15 | AS NOTED | JAC |
| SURFACE PREP | | 1 | 1/29/15 | AS NOTED | JAC |
| | | NO. | DATE | DESCRIPTION | BY |
| | | REVISIONS | | | |


ARC ENTERPRISES, INC.
ADVANCED RESOURCES & CONST. ENTERPRISES, INCORPORATED
P.O. BOX 120 KINGFIELD, ME. 04947
PHONE: (207) 265-2646 – FAX: (207) 265-4054


| | | | |
|---|---|---|---|
| DRAFTER JAC | MISC. DETAILS | | PROJECT NO. 14-180 |
| DATE 1/09/15 | HARTFORD, VT I-95 NB OVER US RTE. 5 | | |
| CHECKED JS | PROJECT NUMBER IM 091-2(79) | | DWG. NO. M1 |
| DATE 1/14/15 | CUSTOMER: PCL CIVIL CONSTRUCTORS | | |

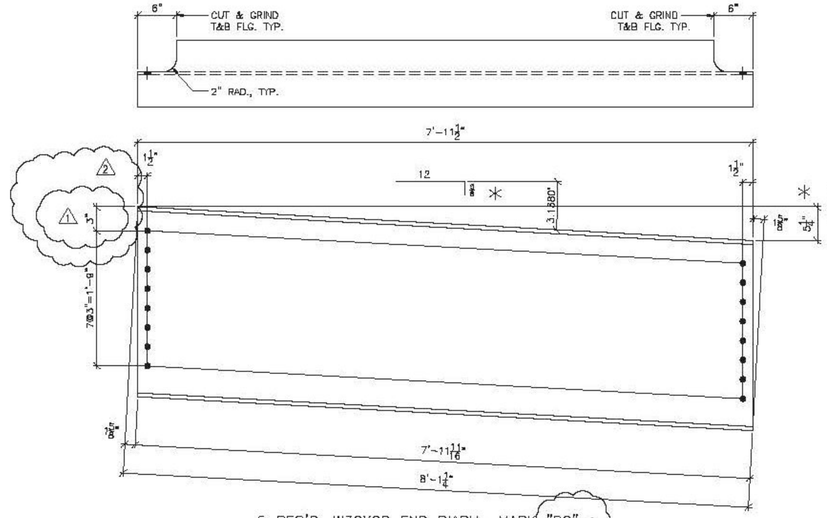


5 REQ'D, W30X90 END DIAPH., MARK "D2" ⚠1

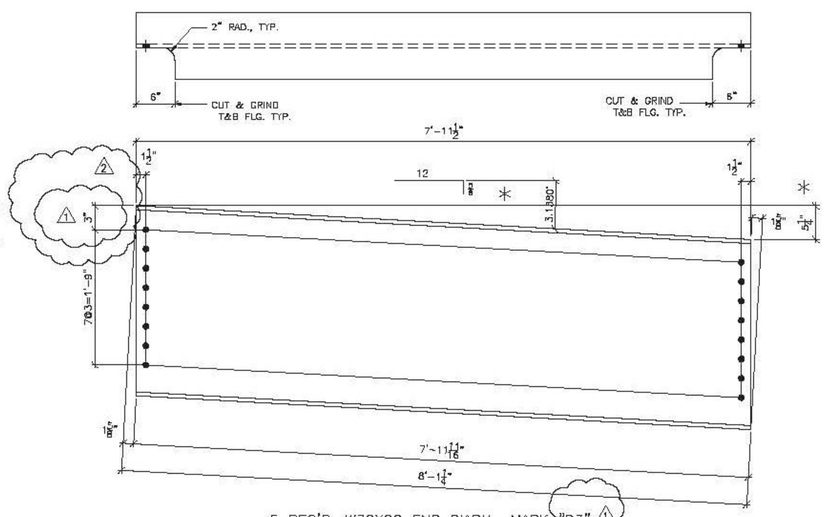


5 REQ'D, W30X90 END DIAPH., MARK "D3" ⚠1

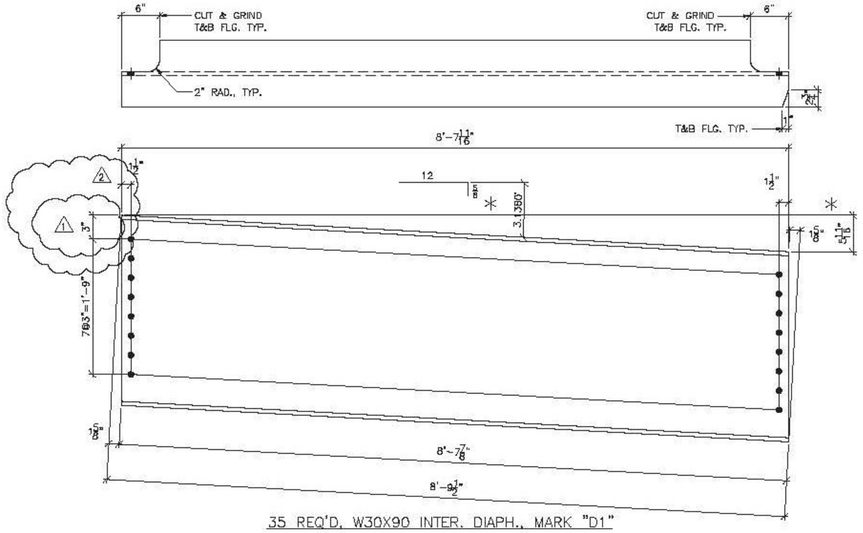


35 REQ'D, W30X90 INTER. DIAPH., MARK "D1"

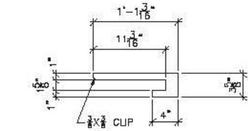


2 REQ'D, ¼" DRIP PL, MARK "dp1"

* NOTE: ⚠1
DIAPHRAGM SLOPE IS CALCULATED BY USING CONNECTION HOLE LOCATIONS IN CONNECTION PLATE

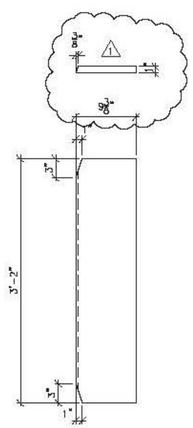


28 REQ'D, 1" STIFF. PL, MARK "p1"

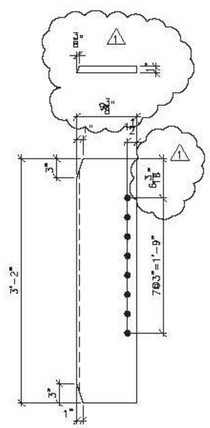


20 REQ'D, 1" STIFF./CONN. PL, MARK "p2"

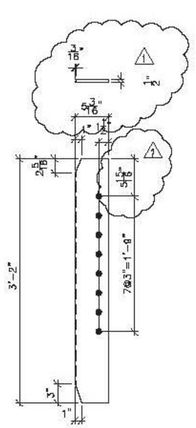


70 REQ'D, ½" CONN. PL, MARK "p3"

# BILL OF MATERIAL

| SHIP | SHIP MARK | NO. PCS. | PIECE MARK | DESCRIPTION | LENGTH | REMARKS | WT. |
|---|---|---|---|---|---|---|---|
| | | 28 | p1 | PL 1X9 3/8 | 3'-2 | | 2716 |
| | | 20 | p2 | PL 1X9 3/8 | 3'-2 | | 1940 |
| | | 70 | p3 | PL ½X5 5/16 | 3'-2 | | 1890 |
| | | 2 | dp1 | PL ¼X3 3/8 | 1'-1 5/16 | | 3 |
| | D1 | 35 | | W30X90 | 8'-9½ | | 26775 |
| | D2 | 5 | | W30X90 | 8'-1¼ | | 3510 |
| | D3 | 5 | | W30X90 | 8'-1¼ | | 3510 |

Vermont Agency of Transportation
**RECEIVED**
CK'D BY RKJJC OK'D BY WL
February 17, 2015
RESUBMIT NO Approved
BY KH DATE 2-19-2015

| | | | | | |
|---|---|---|---|---|---|
| FINISH | ⚠1 SSPC SP10 | | | | |
| MATERIAL | ASTM A709 GRADE 50W U.O.N. | | | | |
| HOLES | 15/16"ø U.O.N. | | | | |
| ELECTRODES | | | | | |
| WELDS | PER WPS | ⚠2 | 2/15/15 | AS NOTED | JAC |
| SURFACE PREP | | ⚠1 | 1/29/15 | AS NOTED | JAC |
| | | NO | DATE | DESCRIPTION | BY |
| | | REVISIONS | | | |

ARC ENTERPRISES, INC.
ADVANCED RESOURCES & CONST. ENTERPRISES, INCORPORATED
P.O. BOX 120 KINGFIELD, ME. 04947
PHONE: (207) 265-2646 – FAX: (207) 265-4054

| | | | |
|---|---|---|---|
| DRAFTER | JAC | MISC. DETAILS | PROJECT NO. 14-180 |
| DATE | 1/09/15 | HARTFORD, VT I-95 NB OVER US RTE. 5 | |
| CHECKED | JS | PROJECT NUMBER IM 091-2(79) | DWG. NO. M2 |
| DATE | 1/14/15 | CUSTOMER: PCL CIVIL CONSTRUCTORS | |

**WELDING PROCEDURE SPECIFICATION (WPS) YES ( X )**
**PREQUALIFIED ____ QUALIFIED BY TESTING ____**
**or PROCEDURE QUALIFICATION RECORD (PQR) YES ( x )**

**Company Name** ARC Ent. Inc.
**Welding Process(es)** SAW
**Supporting PQR No.(s)** PQR # 52

**Identification #** ARC WPS # 52
**Revision** 2 **Date** 1/24/2013 **By** SVH
**Authorized by** STEVE HOWARD **Date** 1/24/2013
**Type -** Manual Semi - Automatic ( )
Machine ( ) Automatic (X)

**JOINT DESIGN USED**
**Type** B - L2c - S
**Single** ( X ) **Double Weld** ( )
**Backing** Yes ( ) NO
**Backing Material**
**Root Opening** 0 - 1/16" **Root Face Dimension**
**Groove Angle** 60 degrees **Radius ( J-U )**
**Back Gouging** ( YES ) **Method**

**Material Spec** A 709
**Type or Grade** HPS 70W
**Thickness** **Groove** U **Fillet**
**Diameter** ( Pipe )

Lincoln LA-85
**FILLER METALS**
**AWS Specification** A 5.23
**AWS Classification** EN5

**SHIELDING**
**Flux** MIL800-H **Gas**
**Composition**
**Flow Rate**
**Electrode - Flux (Class)** **Gas Cup Size**
F8A8-EN5-NI5-H2

Preheat 3/4"= 50 degrees F 3/4 to 1 1/2"= 125 degn rees F
1 1/2 to 2 1/2"= 175 degrees F over 2 1/2"= 225 degrees F

**POSITION**
**Position of Groove** 1G **Fillet**
**Vertical Progression** ( )

**ELECTRICAL CHARACTERISTICS**
**Transfer Mode (FCAW)** **Short Circuiting** ( )
**Globular** ( ) **Spray** ( X )
**Current :** AC ( ) DCEP ( X ) DCEN ( )
**Pulsed** ( )
**OTHER :**

**TECHNIQUE**
**Stringer or Weave Bead** Stringer
**Multi-pass or Single Pass (per side)** Multi
**Number of Electrodes** ONE
**Electrode Spacing** **Longitudinal**
**Lateral**
**Angle**
**Contact Tube to Work Distance** 1" stickout +/- 1/4"
**Peening**
**Interpass Cleaning :** hand or power tools

**POSTWELD HEAT TREATMENT**
**Temp**
**Time**

**WELDING PROCEDURE**

| Pass or Weld Layer(s) | S | Filler Metals | | Current | | Volts | Travel Speed | Joint Details |
|---|---|---|---|---|---|---|---|---|
| | | Class | Diameter | Type & Polarity | Amps or Wire Feed Speed | | | |
| | SAW | EN5 | 3/32" | DCEN | 360 - 440 | 28 - 32 | 12.4 - 16.6 | |

Joint Details

| | Tolerance |
|---|---|
| Root = 0" | + 1/16" |
| Face => 1/2" - 1" = 1/4" | + 1/4" |
| > 1" - 1 1/2" = 3/8" | + 1/4" |
| > 1 1/2" - 2" = 1/2" | + 1/4" |
| Angle = 60 degrees | + 10 - 5 |




VTrans
Received
OK'D _____ OK'd BY TWC

JAN 21 2015

Resubmit _____ APPROVED ✓
BY _____ DATE 1/30/15

**WELDING PROCEDURE SPECIFICATION (WPS) YES ( X )**
**PREQUALIFIED ____ QUALIFIED BY TESTING ___X___**
**or PROCEDURE QUALIFICATION RECORD (PQR) YES ( )**

**Company Name** ARC Ent. Inc.
**Welding Process(es)** SAW
**Supporting PQR No.(s)** ARC PQR # 45

**Identification #** ARC WPS 45a
**Revision** 3 **Date** 9/12/2014 **By** SVH
**Authorized by** STEVE HOWARD **Date** 6/8/2012
**Type -** Manual Semi - Automatic ( )
Machine ( ) Automatic ( X )

DART Welder

**JOINT DESIGN USED**
Type FILLET
Single ( X ) Double Weld ( )
Backing NO ( )
Backing Material
Root Opening 0 Root Face Dimension
Groove Angle NA Radius ( J-U ) _____
Back Gouging Method

**BASE METALS**
Material Spec A709
Type or Grade 50 50W HPS50W
Thickness Groove Fillet U
Diameter ( Pipe )

**FILLER METALS**
AWS Specification A5.23 Lincoln LA-75
AWS Classification EN1K-N1-H5

**SHIELDING**
Flux 960 Gas
Composition
Electrode - Flux (Class) Flow Rate
F8A2-EN1K-N1 Gas Cup Size

Preheat up to 3/4" = 50 degrees 3/4" - 1 1/2" = 70 degrees
1 1/2" - 2 1/2" = 150 degrees Over 2 1/2" = 225 degrees F.

**POSITION**
Position of Groove Fillet 1F 2F
Vertical Progression ( )

**ELECTRICAL CHARACTERISTICS**
Transfer Mode (FCAW) Short Circuiting ( )
Globular ( ) Spray ( X )
Current : AC ( ) DCEP DCEN ( X )
Pulsed ( )
OTHER :

**TECHNIQUE**
Stringer or Weave Bead STRINGER
Multi-pass or Single Pass (per side) SINGLE
Number of Electrodes
Electrode Spacing Longitudinal
Lateral
Angle
Contact Tube to Work Distance 1 1/4" Stickout +/- 1/4"
Peening
Interpass Cleaning :

**POSTWELD HEAT TREATMENT**
Temp
Time

**WELDING PROCEDURE**

| Pass or Weld Layer(s) | S | Filler Metals | | Current | | Volts | Travel Speed | Joint Details |
|---|---|---|---|---|---|---|---|---|
| | | Class | Diameter | Type & Polarity | Amps or Wire Feed Speed | | | |
| | SAW | EN1K | 3/32" | DCEN | 360-440 | 28-32 | 12-16 2 ipm |  |
| 1 | 1/4" | | | | | | | |
| 1 | 5/16" | | | | | | | |
| 1 | 3/8" | | | | | | | |

\Trans
Received
CK'D _____ OK'd BY JWK

JAN 2 1 2015

Resubmit _____ APPROVED ✓
BY _____ DATE 1/30/15

Welding Procedure Specification (wps) Yes ( X )
PREQUALIFIED ___ QUALIFIED BY TESTING __X__
or PROCEDURE QUALIFICATION RECORD (PQR) YES ( )

Company Name A.R.C. Enterprises, Inc.
Welding Process(es) SAW
Supporting PQR No.(s) ARC PQR # 46

Identification # ARC WPS #46
Revision 7 Date 5/1/2013 By SVH
Authorized by STEVE HOWARD Date 5/1/2013
Type - Manual Semi - Automatic ( )
Machine ( ) Automatic x

**JOINT DESIGN USED**
Type B-L2c-S
Single Double Weld ( X )
Backing ( ) NO (X)
Backing Material
Root Opening 0" Root Face Dimension 1/4" min
Groove Angle 60 degrees Radius ( J-U )
Back Gouging (YES) Method open

**BASE METALS**
Material Spec A709
Type or Grade 50W HPS50W
Thickness Groove U Fillet
Diameter ( Pipe )

**FILLER METALS** Lincoln LA-75
AWS Specification A5.23
AWS Classification EN1K-N1-H8

**SHIELDING**
Flux 960 Lincoln Gas
Composition
Electrode - Flux (Class) Flow Rate
FSAD-EN1K-N1-H8 Gas Cup Size

Preheat 3/4" = 60 degrees 3/4" - 1 1/2" = 70 degrees.
1 1/2" - 2 1/2" = 150 degrees. Over 2 1/2" = 225 degrees F.

**POSITION**
Position of Groove 1G Fillet
Vertical Progression ( )

**ELECTRICAL CHARACTERISTICS**
Transfer Mode (FCAW) Short Circuiting ( )
Globular ( ) Spray (X)
Current : AC ( ) DCEP (X) DCEN ( )
Pulsed ( )
OTHER :

**TECHNIQUE**
Stringer or Weave Bead STRINGER
Multi-pass or Single Pass (per side) MULTI
Number of Electrodes ONE
Electrode Spacing Longitudinal
Lateral
Angle

Contact Tube to Work Distance 1"1/4 stickout +/-1/4"
Peening none
Interpass Cleaning : Hand or Power tools

**POSTWELD HEAT TREATMENT**
Temp

**WELDING PROCEDURE** Min. heat input=37.3 Kj/in. Max heat input= 70.4 Kj/in.

| Pass or Weld Layer(s) | S | Filler Metals | | Current | | Volts | Travel Speed | Joint Details |
|---|---|---|---|---|---|---|---|---|
| | | Class | Diameter | Type & Polarity | Amps or Wire Feed Speed | | | B-L2c-S |
| | SAW | EN1K | 3/32" | DCEP | 360-440 | 28-32 | 14-16.2 ipm | Tolerance<br>Root = 0" = 1/16"<br>Face = > 1/2" - 1" = 1/4" = 1/4"<br>> 1" - 1 1/2" = 3/8" = 1/4"<br>> 1 1/2" - 2" = 1/2" = 1/4"<br>Angle = 60 degrees = 10 - 6<br>BACKGOUGE |

VTrans
Received
CK'D ___ OK'd BY JWC
JAN 21 2015
Resubmit ___ APPROVED AS NOTED
BY ___ DATE 1/30/15