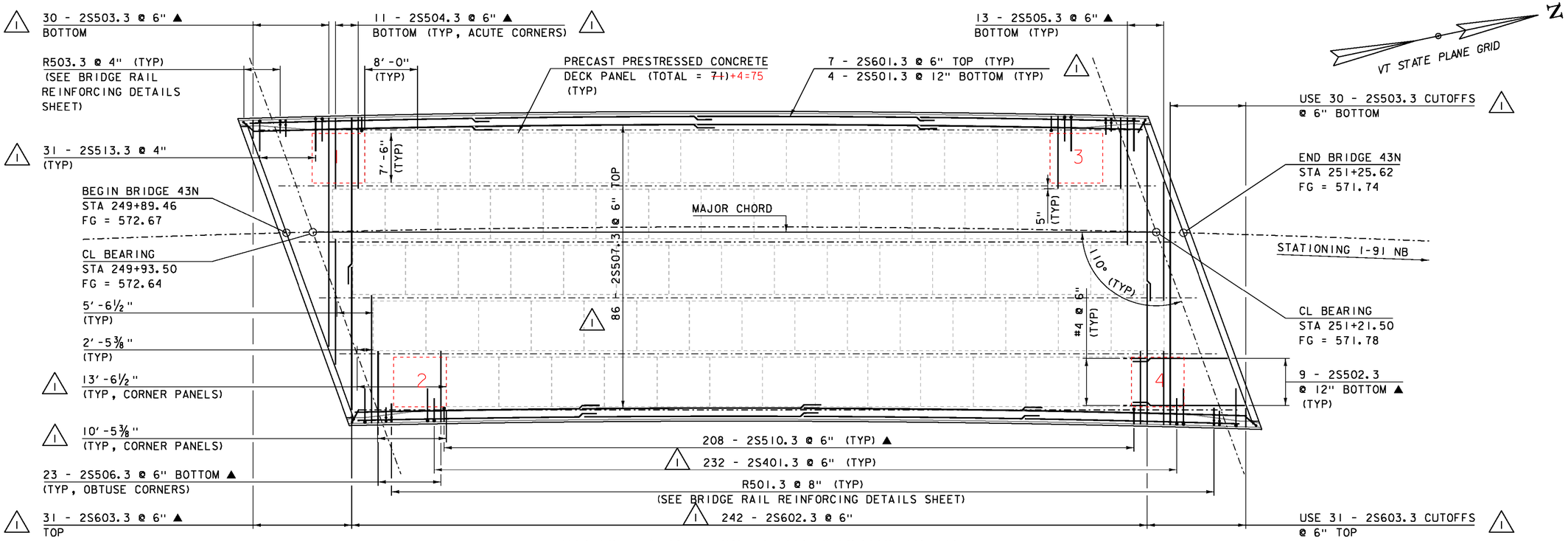

BRIDGE 43N DECK REINFORCING PLAN

SCALE ⅛"=1'-0"

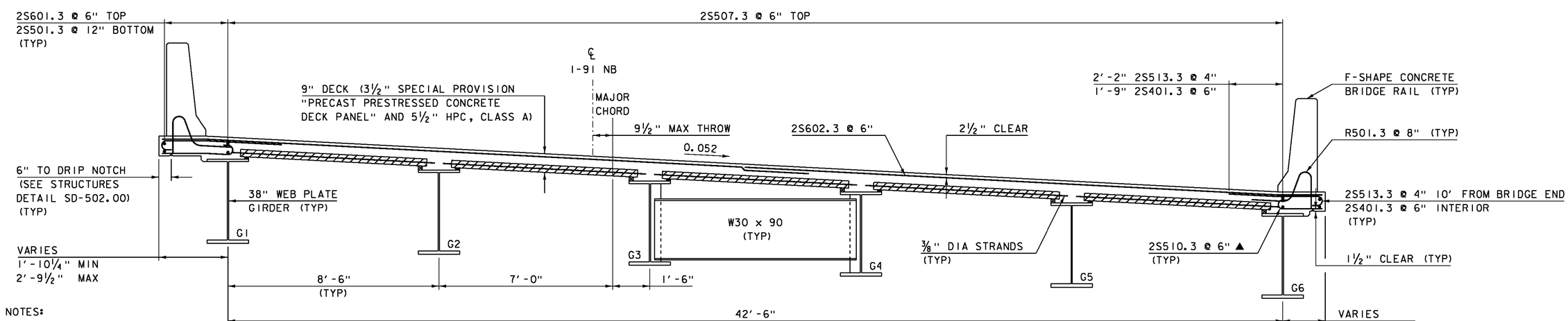

BRIDGE 43N TYPICAL DECK REINFORCEMENT

SCALE ½"=1'-0"

NOTES:

1) SPLICES FOR TOP TRANSVERSE AND LONGITUDINAL DECK REINFORCING STEEL SHALL NOT BE LOCATED OVER PANEL JOINTS.

2) PRIOR TO PLACING THE DECK CONCRETE, LAITANCE OR OTHER CONTAMINATES THAT WOULD INTERFERE WITH FULL BOND TO THE PANELS SHALL BE REMOVED BY AN APPROVED METHOD PER SECTION 510.12(b)(4).

3) PRIOR TO PLACING THE DECK CONCRETE, THE PRECAST PRESTRESSED CONCRETE DECK PANELS SHALL BE WETTED IN ACCORDANCE WITH SECTION 501.10(d).

REVISION	DATE	DESCRIPTION	BY
1	01-05-2015	REINFORCING STEEL BAR COUNTS AND DIMENSIONS TO DECK PANELS	RK

NOTE:
NF = NEAR FACE
FF = FAR FACE
EF = EACH FACE
▲ = CUT TO FIT IN FIELD
3" CLEAR, UNLESS OTHERWISE SPECIFIED ON THE PLANS.
2'-2" BAR LAP FOR #5 REINFORCING
2'-7" BAR LAP FOR #6 REINFORCING

PROJECT NAME: HARTFORD
PROJECT NUMBER: IM 091-2(79)

FILE NAME: s12a132sup43N.dgn
PROJECT LEADER: K. HIGGINS
DESIGNED BY: R. KLINEFELTER
43N DECK REINFORCING PLAN
PLOT DATE: 05-JAN-2015
DRAWN BY: K. FRIEDLAND
CHECKED BY: R. KLINEFELTER
SHEET 91 OF 166