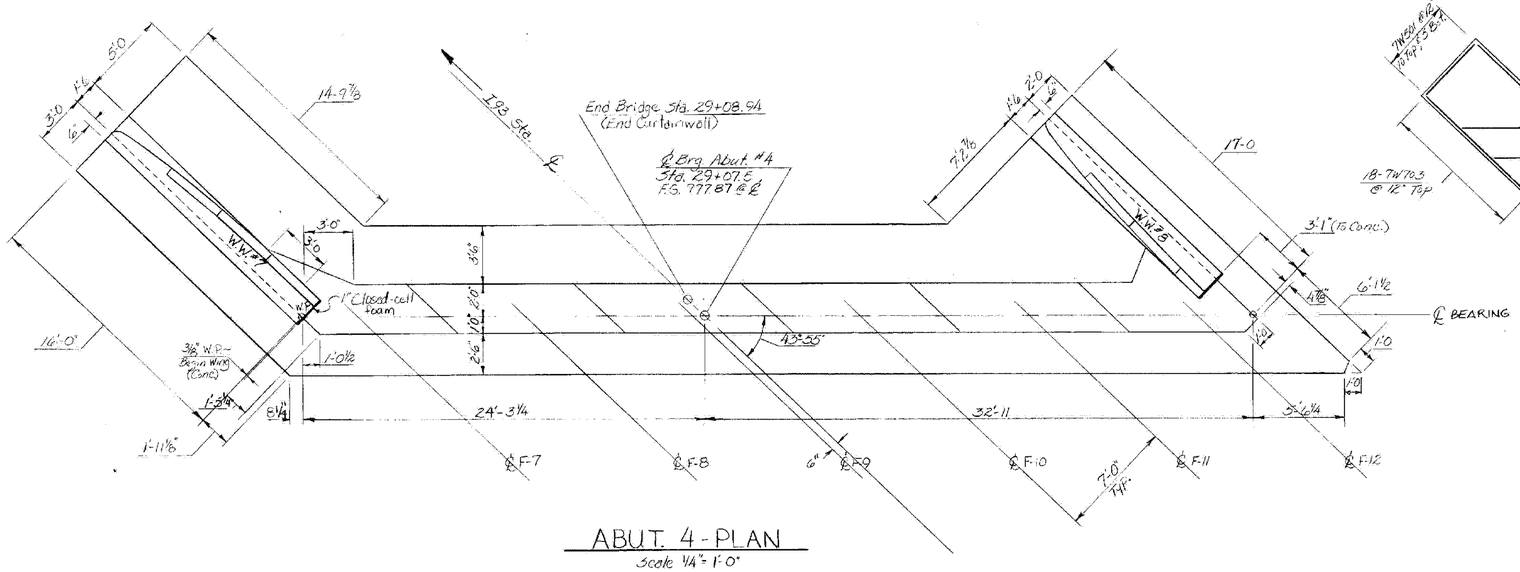

ABUT. 4 - PLAN
Scale 1/4" = 1'-0"

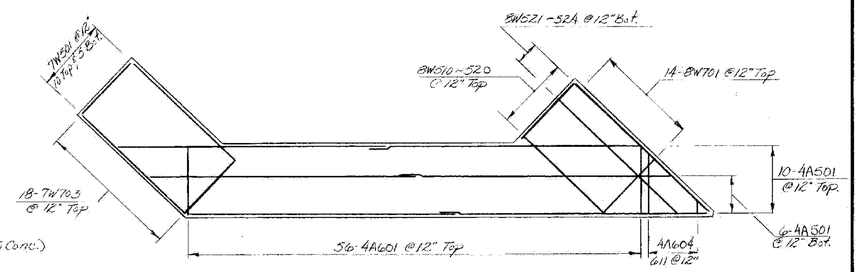

FOOTING REINFORCING PLAN
Scale 1/8" = 1'-0"

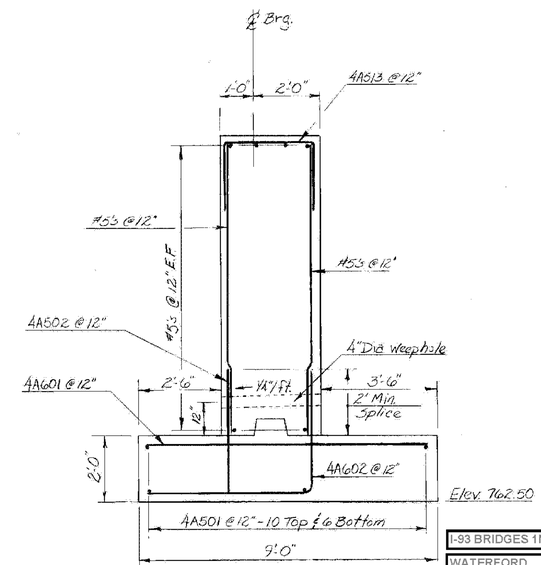

SECT. A-A
Scale 1/2" = 1'-0"

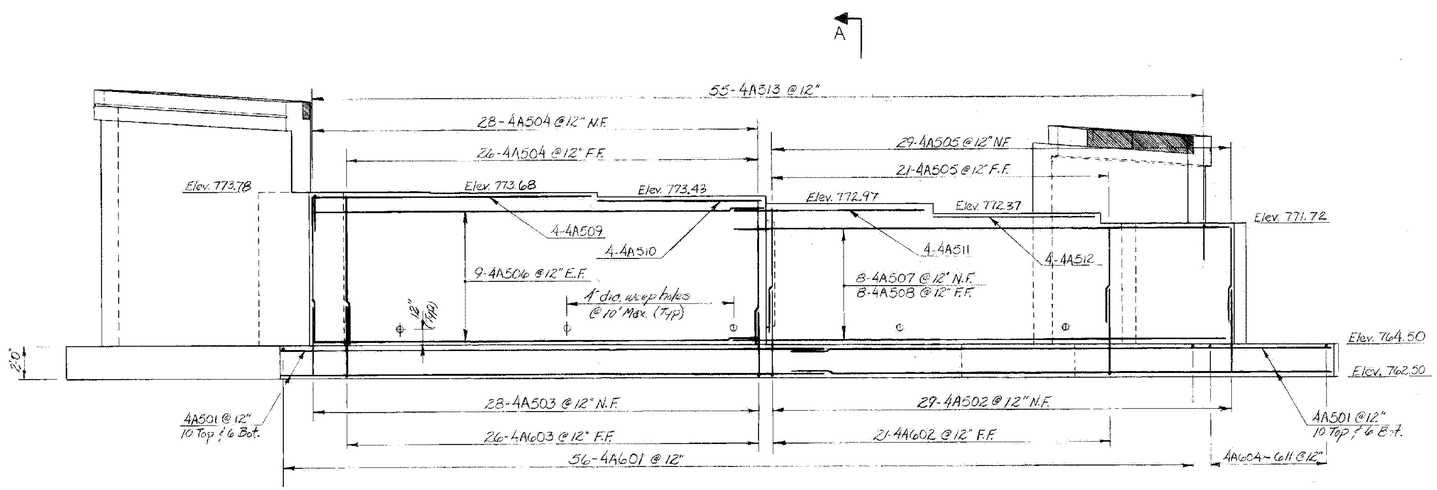

ABUT. 4 - ELEV.
Scale 1/4" = 1'-0"

NOTES
N.F. = Near Face
F.F. = Far Face
E.F. = Each Face

I-93 BRIDGES 1N&S
WATERFORD
IM MEMB(31)
SHEET 22 OF 48
FOR REFERENCE ONLY

STATE OF VERMONT
AGENCY OF TRANSPORTATION

TOWN OF WATERFORD	Bridge No. 1 NB
HIGHWAY NO. I93	Log Sta.
	Surv. Sta. 28+0
I93 N.B. & S.B. Over Vt. Rte. 18	
N.B. ABUT. 4 DETAILS	
Designed by A. Elwood	Drawn by R. Whitcomb
Checked by G.V.S. date 5-19-80	Bridge Design Supervisor R. S. HAUPT date 6-80
PROJECT CONTRACT I WATERFORD	PROJECT NO. I93-1(3)
Bridge Sheet No. BR 117	Sheet 147 of 489

BR-4

BRUNING 44-131 40151