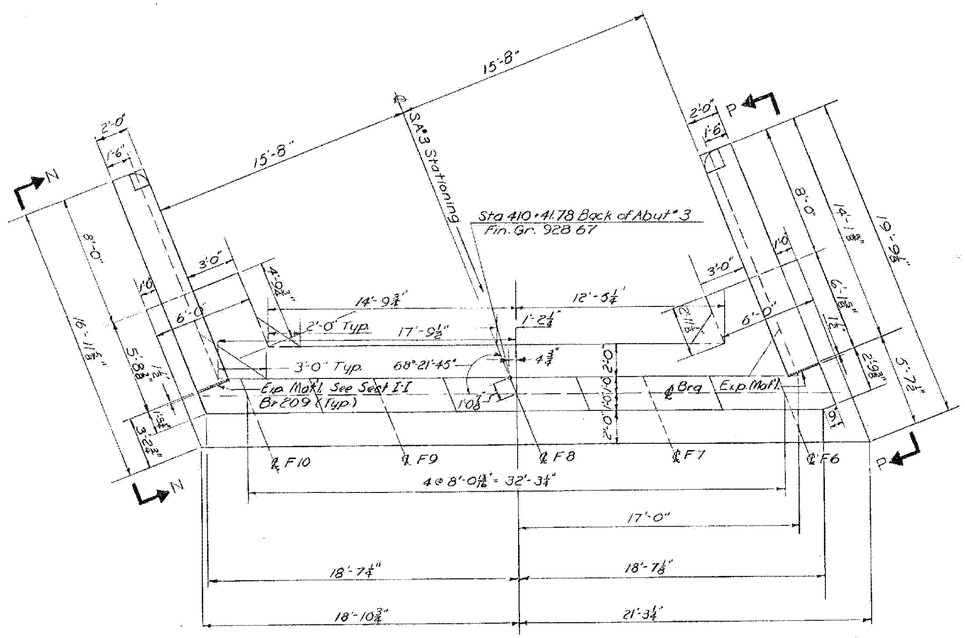

PLAN

For Corner Reinforcing Details, Superstructure Details At Abutment And Abutment Notes See Br. Sh. 207

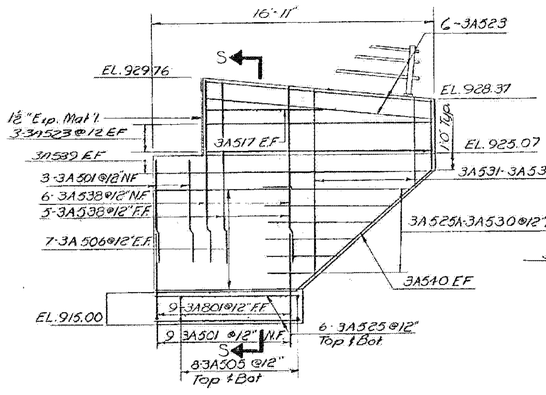

ELEVATION P-P

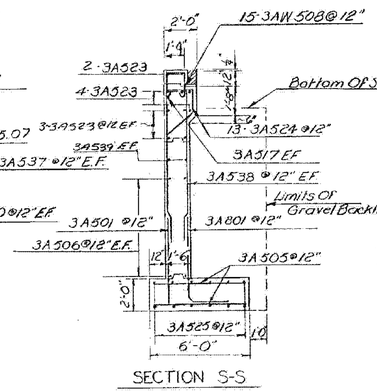

SECTION S-S

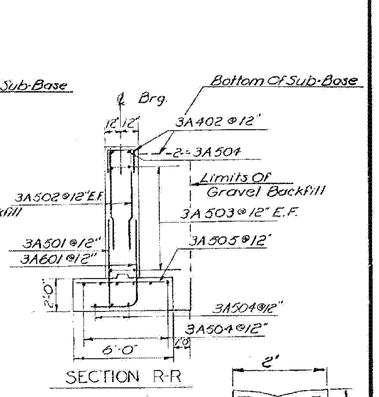

SECTION R-R

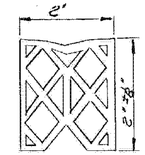

Item 372-C TYPE A
Detail N.T.S.

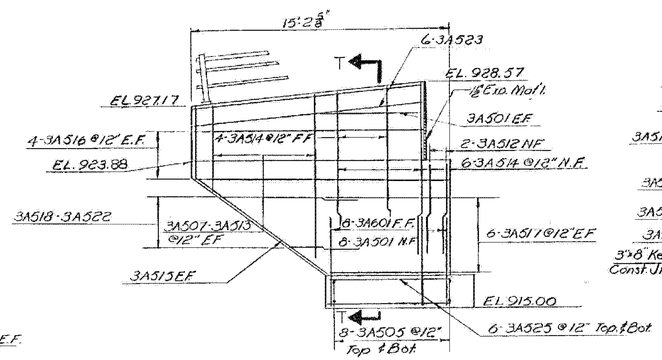

ELEVATION N-N

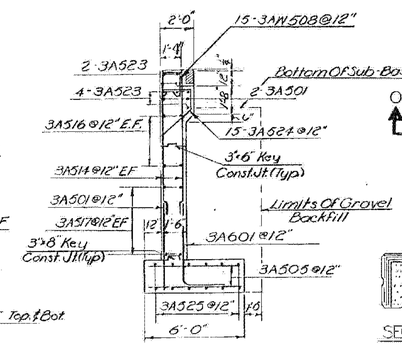

SECTION T-T

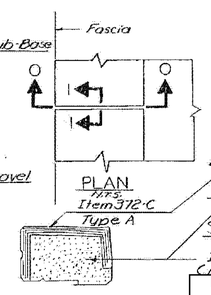

SECTION 1-1
N.T.S.
Item 401.12C
(1/4" Self-Expanding Cork)

SECTION O-O
N.T.S.

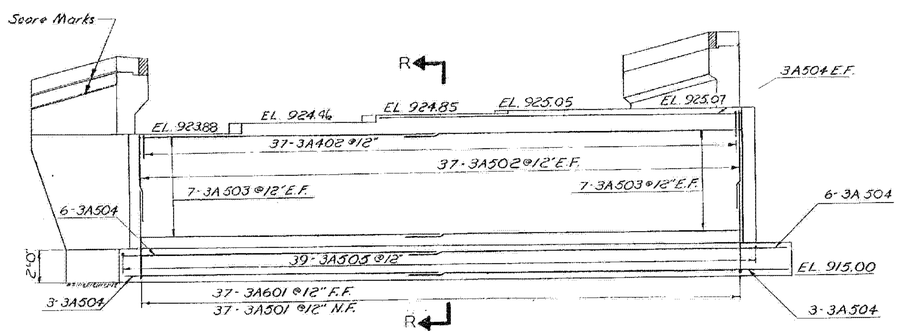

ELEVATION

For Corner Reinforcing Details, Superstructure Details At Abutment And Abutment Notes See Br. Sh. 207

ITEM NO.	ITEM	UNIT	NET		TOTAL	FINAL
	CHAN. EXCAV. OF EARTH	C. Y.				
	CHAN. EXCAV. OF ROCK	C. Y.				
	UNCLASS. CHAN. EXCAV.	C. Y.				
	STRUCT. EXCAV.	C. Y.				
	CONC. CLASS AA (MOD.)	C. Y.				
	CONC. CLASS B (MOD.)	C. Y.				
	REINF. STEEL	LBS.				
	ASPHALTIC-ASB. COATING	S. Y.				
	TREATED TIMBER PILING	L. F.				
	SPLICES FOR STEEL PILING	EA.				
	STEEL PILING	L. F.				
	UNTREATED TIMBER PILING	L. F.				

Some Changes as BR 207. No Closure Wall added. Changed Dimension for Item 372-A from 1 1/8" to 14"
F. Kirk 3/2/89

BARTON-COVENTRY
IM BPNT (11)
SHEET 83 OF 84
BRIDGES 108N&S
FOR REFERENCE ONLY

CURB JOINT DETAIL
N.T.S.

Br 209 of 212

STATE OF VERMONT
DEPARTMENT OF HIGHWAYS

PROJECT IRASBURG-DERBY
TOWN OF COVENTRY
ROUTE NO. I-91 STA. 2683±
SA3 OVER I-91
ABUTMENT #3
SCALE 1/4 = 1'-0"
IN CHARGE EDWARDS & KELCEY
DRAWN BY S. CURRAN CHECKED BY A. CENTORE 4-86
PROJECT NO. I 91-3(8)
SHEET 208 OF 605 BR 209