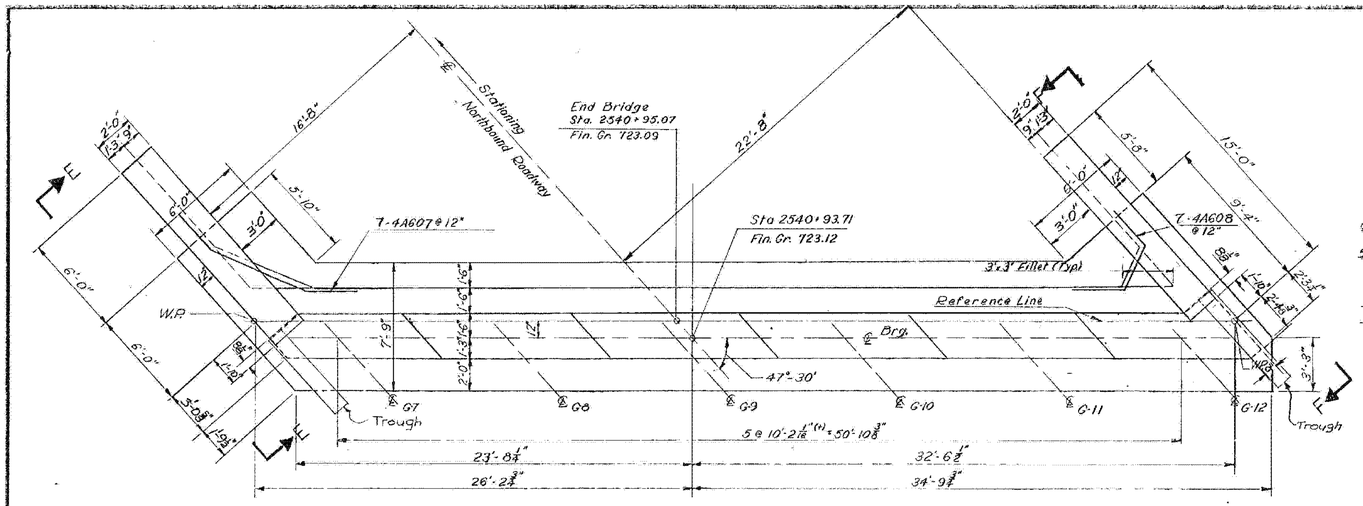

PLAN
1/4" = 1'-0"

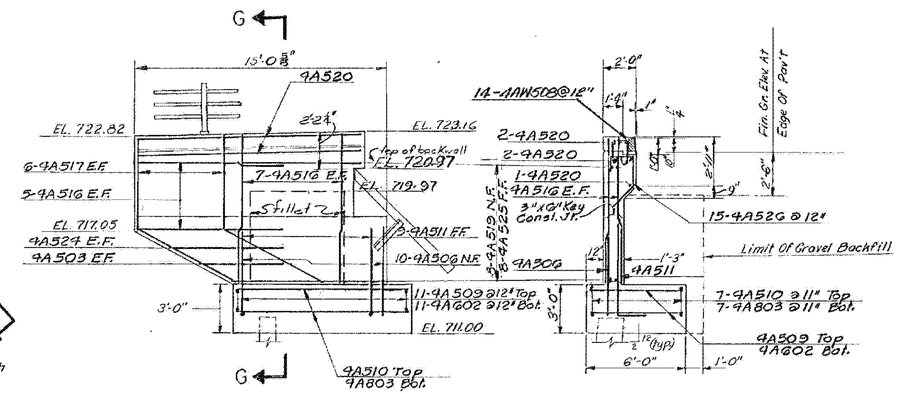

SECTION E-E
1/4" = 1'-0"

SECTION G-G
1/4" = 1'-0"

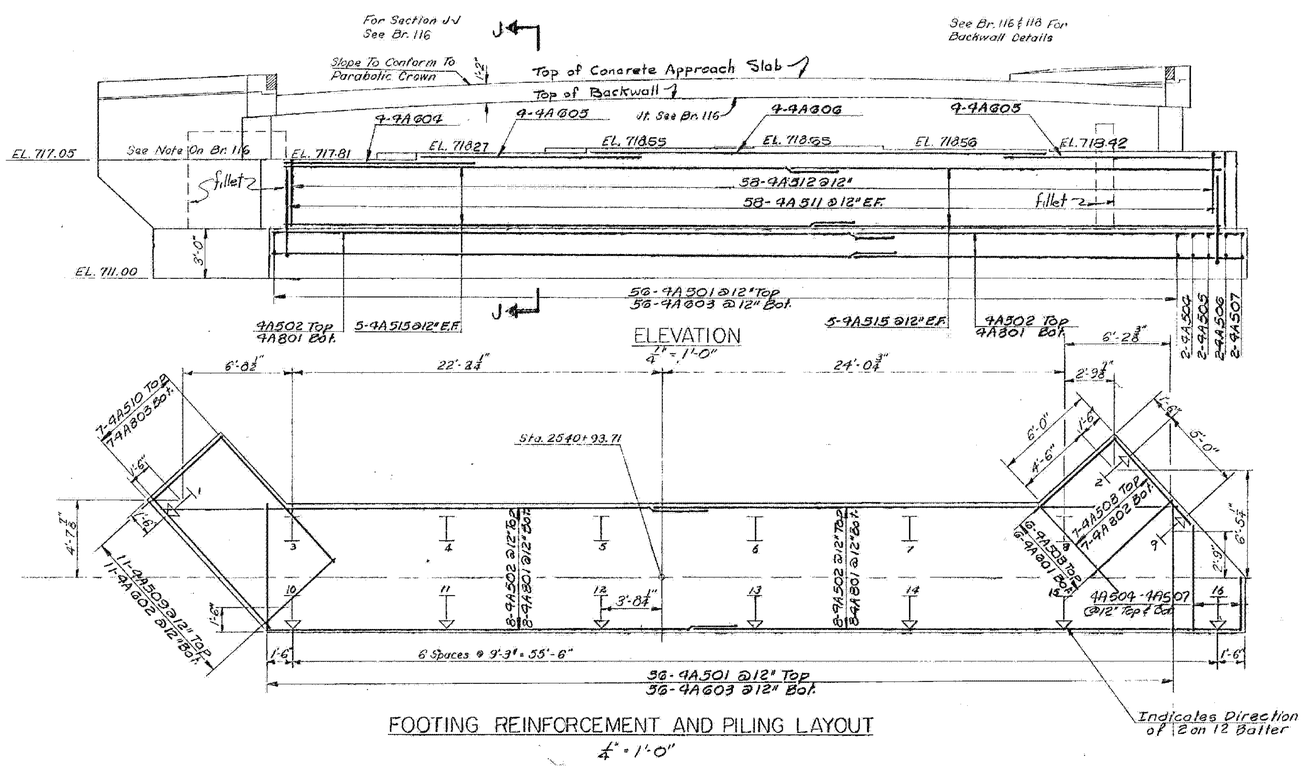

ELEVATION
1/4" = 1'-0"

FOOTING REINFORCEMENT AND PILING LAYOUT
1/4" = 1'-0"

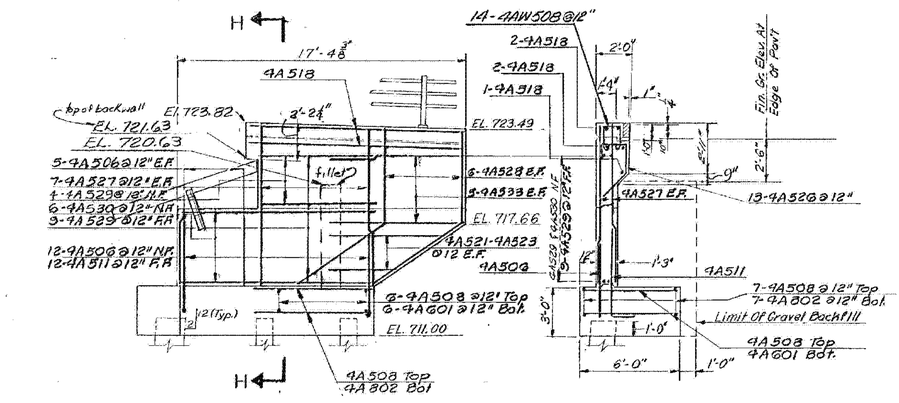

SECTION F-F
1/4" = 1'-0"

SECTION H-H
1/4" = 1'-0"

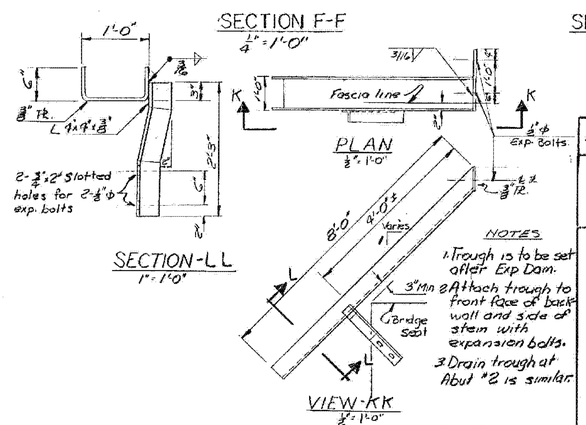

SECTION-LL
1" = 1'-0"

NOTES
1. Trough is to be set after Exp Dam.
2. Attach trough to front face of back wall and side of stem with expansion bolts.
3. Drain trough at Abut #2 is similar.

DRAIN TROUGH DETAILS

BARTON-COVENTRY
IM BPNT (11)
SHEET 71 OF 84
BRIDGE 107S
FOR REFERENCE ONLY

1	Same changes as on BR 113 - R. Tasto 3/69 Added Detail of Drain Trough - 5-11-69

STATE OF VERMONT
DEPARTMENT OF HIGHWAYS

PROJECT
TOWN OF IRASBURG IRASBURG-DERBY
ROUTE No. I-91 STA. 2539 ±
I-91 OVER BARTON RIVER AND SA #3
ABUTMENT #1
SCALE AS SHOWN
IN CHARGE C. TERENZIO
DRAWN BY D.L. CHECKED BY A. CENTORE
PROJECT No. I 91-3(8) 9-67
SHEET 184 OF 605 BR 115

BR 8