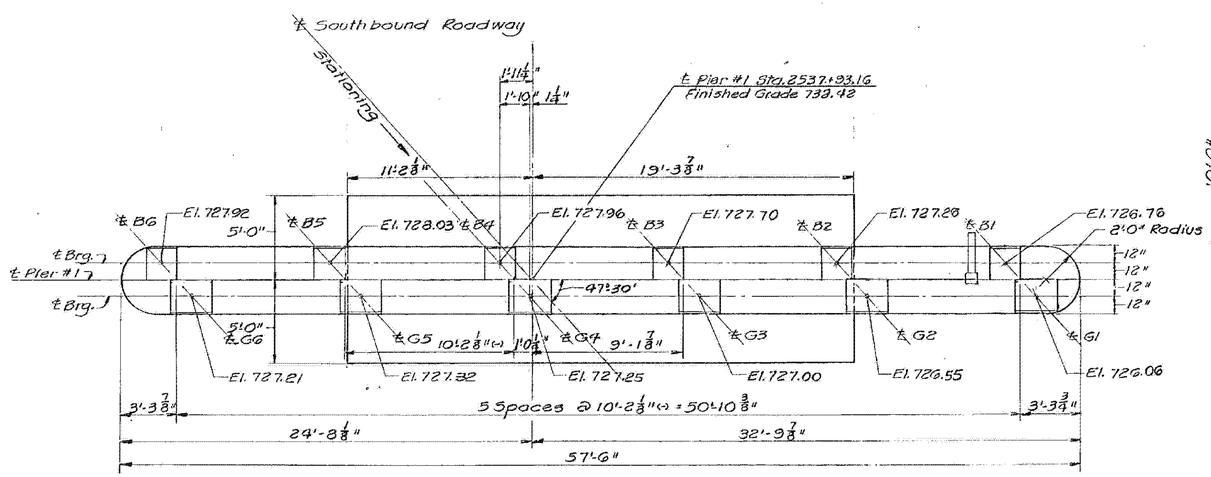

PLAN

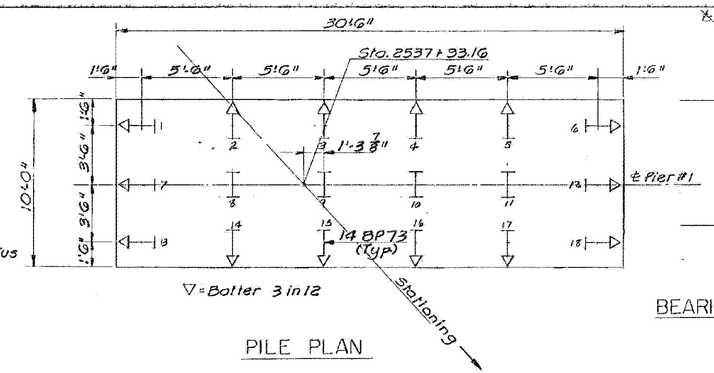

PILE PLAN

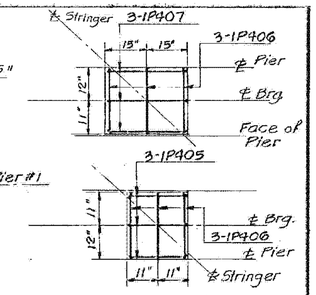

BEARING PAD DETAIL

SCALE: 1/2" = 1'-0"

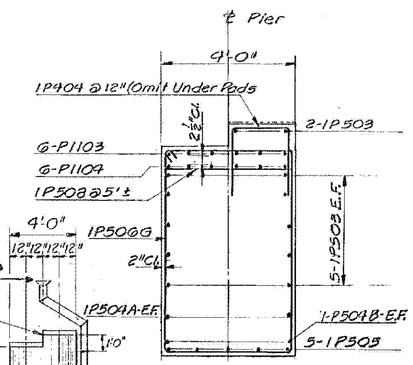

SECTION B-B

SCALE: 1/2" = 1'-0"

GENERAL PIER NOTES:

1. For General Notes see STD SCB-D1-67
2. The sides, ends, and bottom of the pier cap, shall be coated with Item 940 Water Repellant.
3. Space reinforcement to clear for anchor bolts.
4. All pier footing on piles are designed for a maximum pile load of 80 Tons.
5. Pier #4 is designed for a maximum bearing pressure of 5 Tons/Sq. Ft. on Rock.
6. Reinforcing steel is to have a minimum clear cover of 3" in the footings and stem and 2" in the cap.
7. All concrete in footing, stem, and cap to be class B.
8. For drainage details for the expansion dam of piers 1 & 4 see std. sheet SCB-D3-67
9. Item 502 Preparing Subsurface for Driving Piling to be paid for only at pier #1.
10. The contractor shall submit details for the construction procedure on the foundations of Piers 2, 3, 5 & 6 and the work shall not commence on these substructures until the engineer has approved the details in writing.

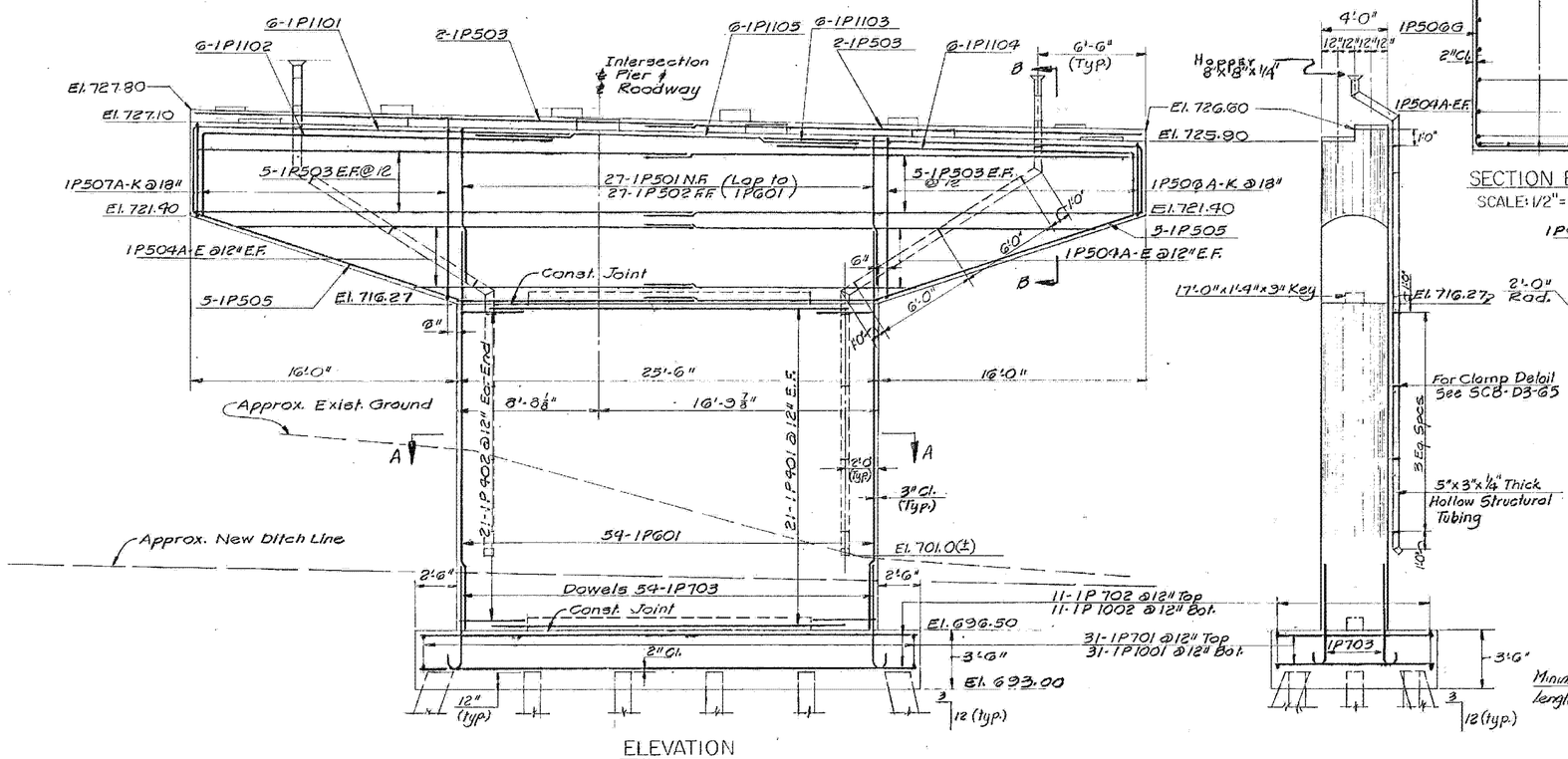

ELEVATION

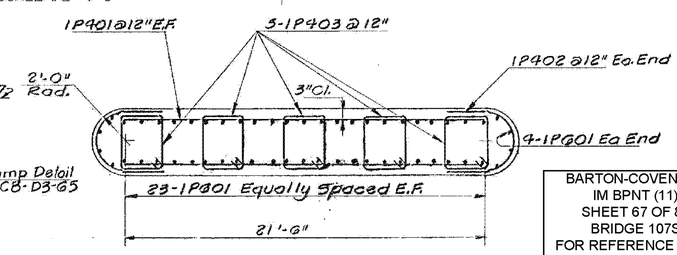

SECTION A-A

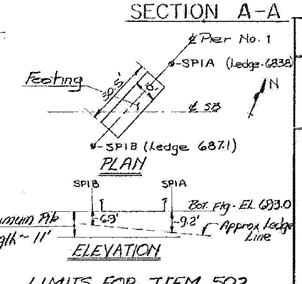

LIMITS FOR ITEM 502

1" = 30'

BARTON-COVENTRY
IM BPNT (11)
SHEET 67 OF 84
BRIDGE 107S
FOR REFERENCE ONLY

Added Detail Showing Limits For Item 502 See Letter From Edwards & Kelsey 5-2-69. R.E.B. 5-11-69

STATE OF VERMONT
DEPARTMENT OF HIGHWAYS

PROJECT IRASBURG-DERBY
TOWN OF IRASBURG
ROUTE No. I-91 STA. 2539±
I-91 OVER BARTON RIVER AND SA #3
PIER #1
SCALE 1/4" = 1'-0" Except as Noted
IN CHARGE C. TERENZIO
DRAWN BY J.M.B. CHECKED BY A. CENTORE
PROJECT No. I 91-3(8) 9-67
SHEET 188 OF 605 BR. 119