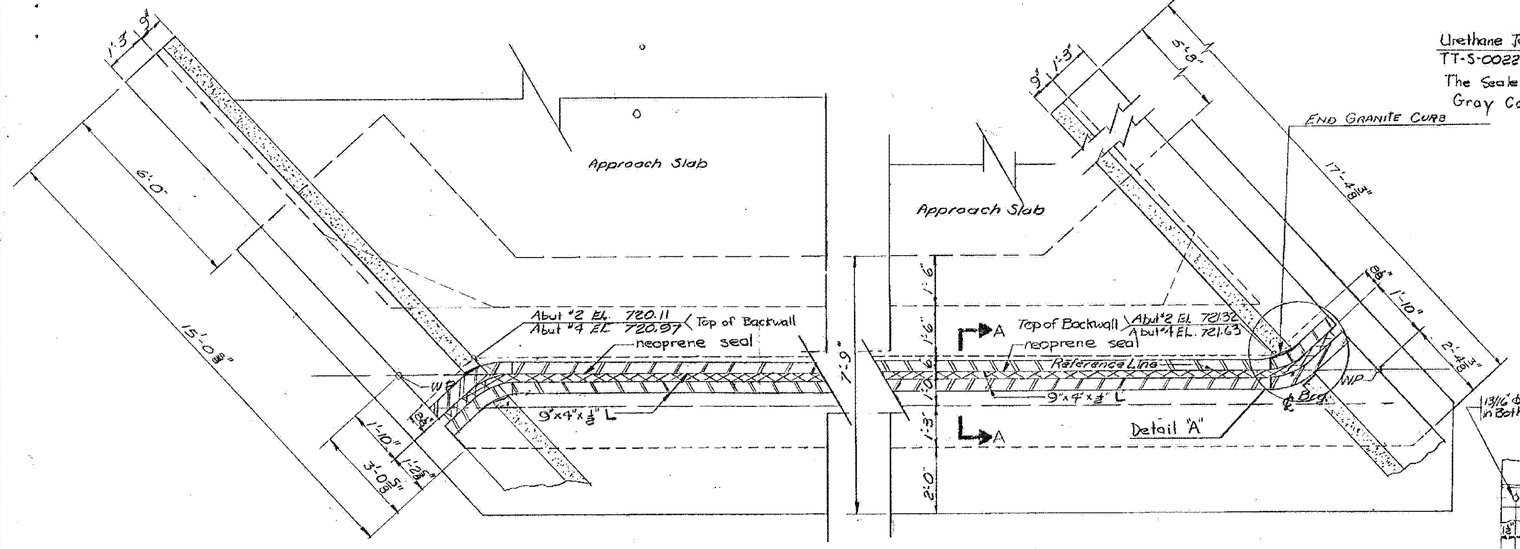

PLAN ABUTMENTS 2 & 4

SCALE: 1/2"=1'-0"

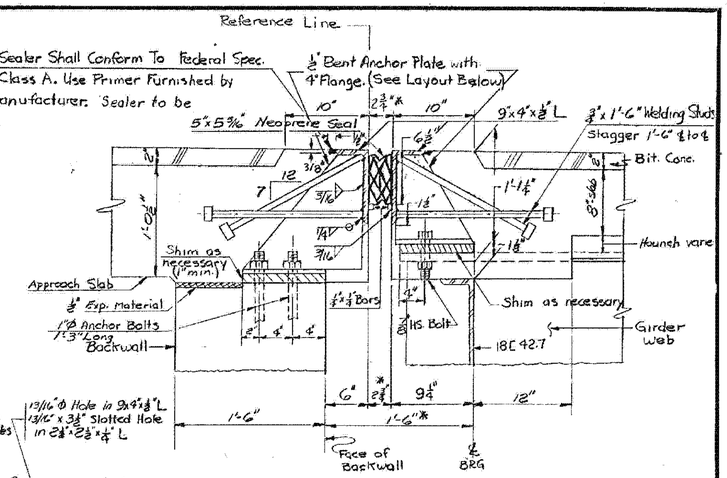

SECTION - A A

1 1/2" = 1'-0"

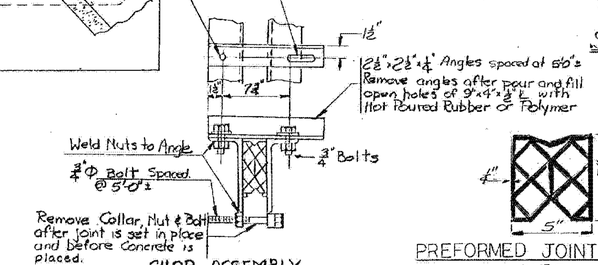

SHOP ASSEMBLY

NOTE: All dimensions indicated * are for 45°F.

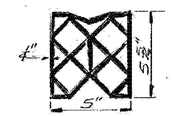

PREFORMED JOINT MATERIAL

N.T.S.

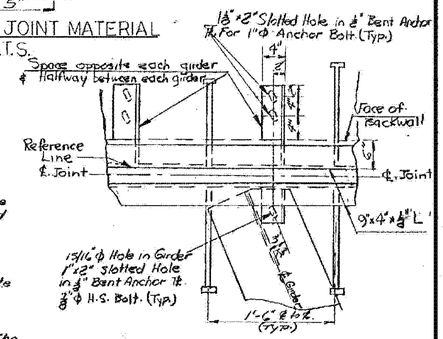

Anchor Plate Layout

N.T.S.

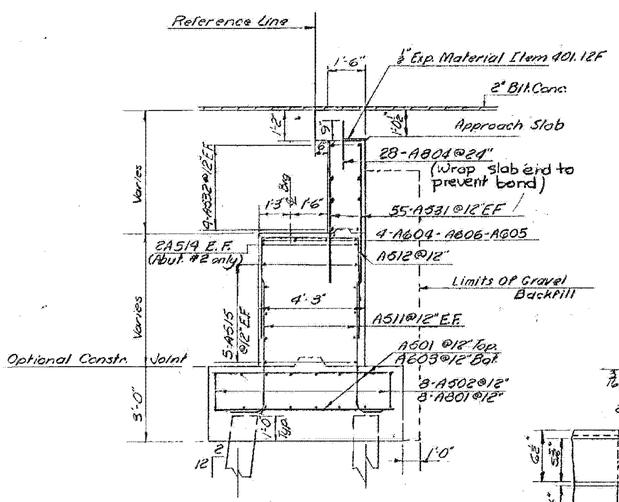

SECTION J-J

ABUTMENTS 2 & 4 TYPICAL SECTION

SCALE: 3/8"=1'-0"

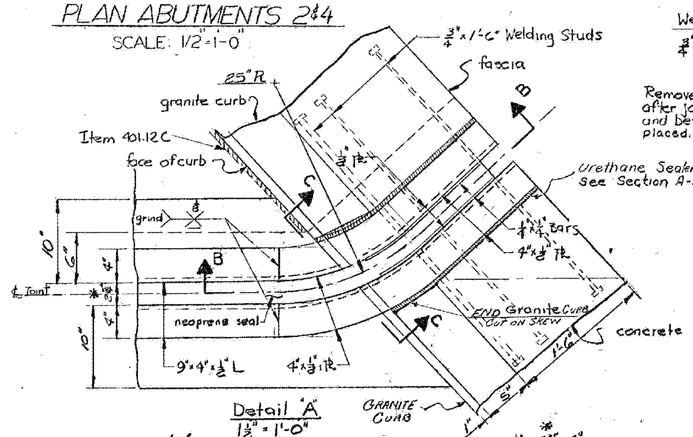

Detail "A"

1 1/2" = 1'-0"

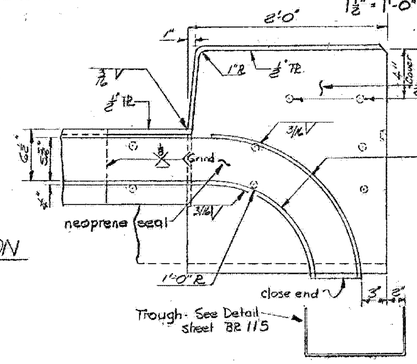

Section - BB

1 1/2" = 1'-0"

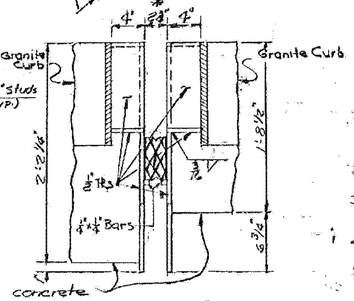

Section-CC

1 1/2" = 1'-0"

General Abutment Notes

1. For Estimated Length Of Piles And No. Of Splices See Br. 113.
2. Abutments Are Designed For A Maximum Pile Bearing Pressure Of 58 Tons.
3. All Reinforcing To Have Minimum Cover Of 2" Except 3" In Footing.
4. For Details Of Const. Jts. See Std. Sh. SCB-D6-67 Detail B.
5. No Concrete Shall Be Placed Above Adjacent Bridge Seat Elevation Until Girders Have Been Profiled And Final Finish Grade Established By The Engineer.
6. Four (4) Inch Diameter Weep Holes Shall Be Provided In All Abutments, Wings And Walls. Weep Holes Shall Be Spaced Not Over Ten (10) Feet Center To Center And So Placed To Provide Adequate Drainage For Backfill.

Notes For Abutments 2 & 4

1. The Front Face Of The Backwall From the Edge Of The Steel Angle For The Joint To The Bridge Seat Shall Be Coated With Paint Waterproofing, Item 410. All Exposed Surfaces Not Otherwise Coated Shall Be Covered With Water Repellant, Item 440.

Expansion Joint Notes

1. The Entire Expansion Joint And All Necessary Material And Labor to Install And Adequately Anchor the Expansion Joint Shall Be Included in Item 439A, Elastomeric Bridge Deck Expansion Joint.
2. The Expansion Joint Shall Be Entirely Shop Fabricated and Assembled As Indicated On The Plans.
3. Prior To Fabrication, Shop Drawings Shall Be Submitted In Quadruplicate To The State of Vermont, Department of Highways Bridge Engineer for Approval.
4. The Drain Trough And the Necessary Hanger Shall Be Paid For As Structural Steel Item 404-A See Sheet BR. 115
5. The Neoprene Seals Shall Be Bonded To The Steel Members With An Approved Adhesive. Prior to Bonding, All Steel Surfaces Must be Sandblasted.
6. Design Movement: Compress 5/8" Extend 5/8" From 45°F.
7. A Qualified Representative Of The Joint Manufacturer Shall Be On The Project At The Time Of Installation To Ensure Proper Procedures Are Followed.
8. All Steel To Be ASTM A-36.

Changed Curb from 2'8" to 2'0". Installed Preformed Expansion Joint. RE Feb 6-10-16

STATE OF VERMONT

DEPARTMENT OF HIGHWAYS

PROJECT IRASBURG-DERBY

TOWN OF IRASBURG

ROUTE NO. I-91 STA. 2 539±

I-91 OVER BARTON RIVER AND S.A. #3

ABUTS. 2 & 4 DETAILS

SCALE AS SHOWN

IN CHARGE C. TERENZIO

DRAWN BY S. CURRAN CHECKED BY A. CENTORE

PROJECT NO. 191-3(8) 9-67

SHEET 185 OF 306 BR. 116

BARTON-COVENTRY
IM BPNT (11)
SHEET 66 OF 84
BRIDGE 107S
FOR REFERENCE ONLY