1½" Expansion Material
Item 401.12C. Seal with Item 378
Polyurethane Joint Sealer.
For details see sheet BR 306.
(Typical both wings)

Note: Curb widths are not drawn to scale

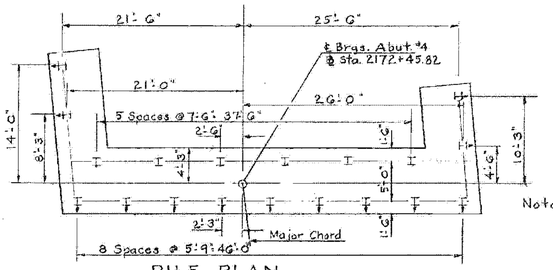

PILE PLAN
SCALE 1/8" = 1'-0"

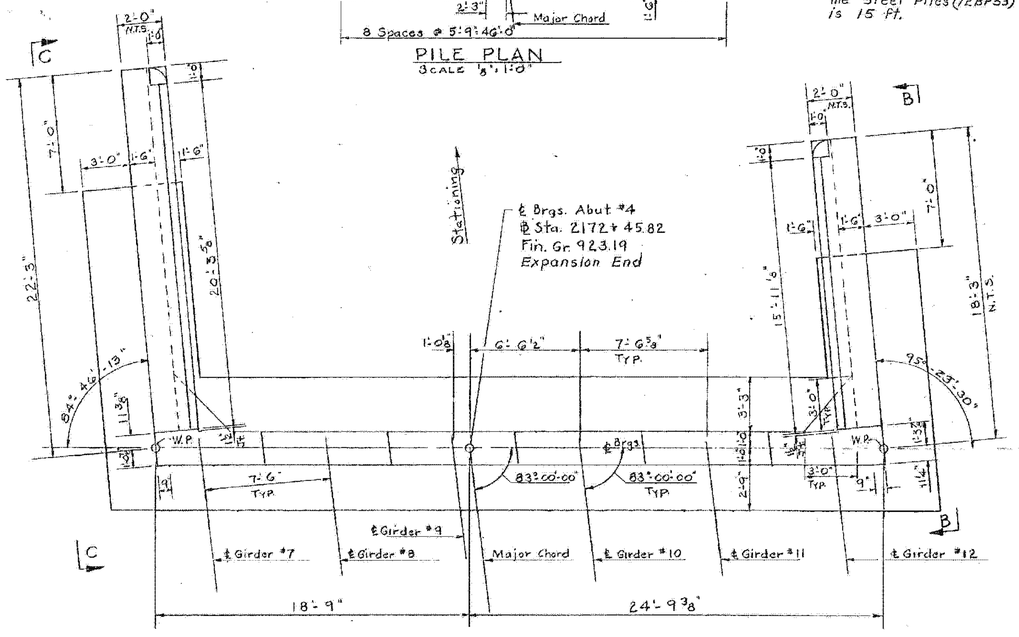

PLAN
SCALE 1/4" = 1'-0"

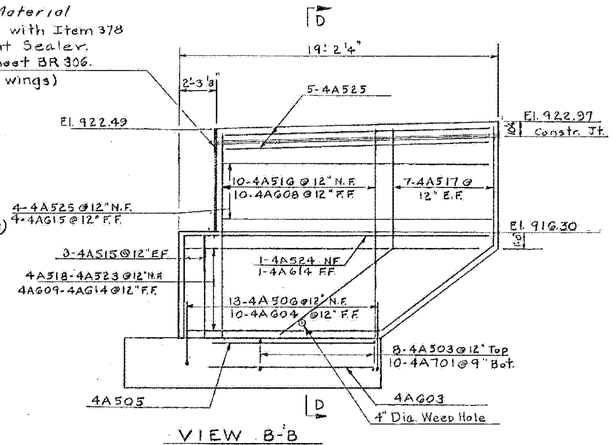

Note: Estimated Length of the Steel Piles (12BP53) is 15 ft.

VIEW B-B
SCALE 1/4" = 1'-0"

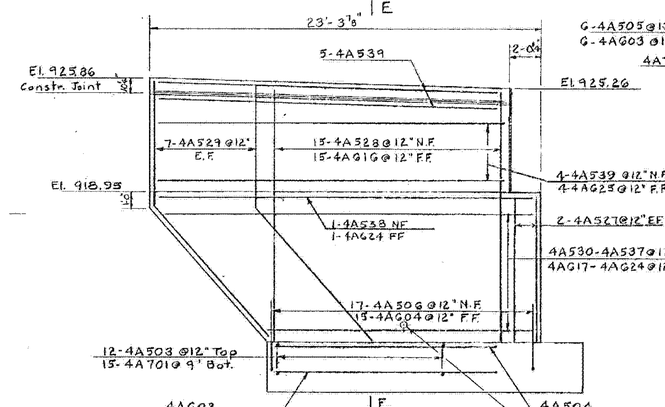

VIEW C-C
SCALE 1/4" = 1'-0"

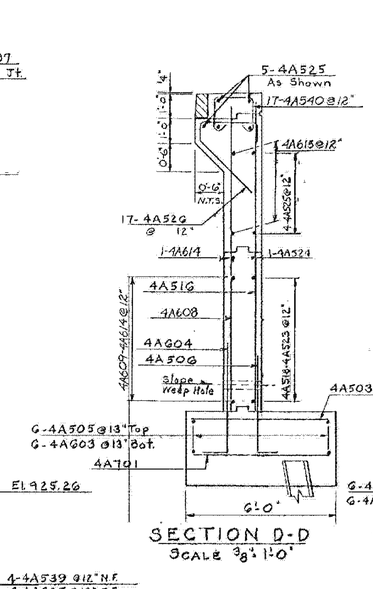

SECTION D-D
SCALE 3/8" = 1'-0"

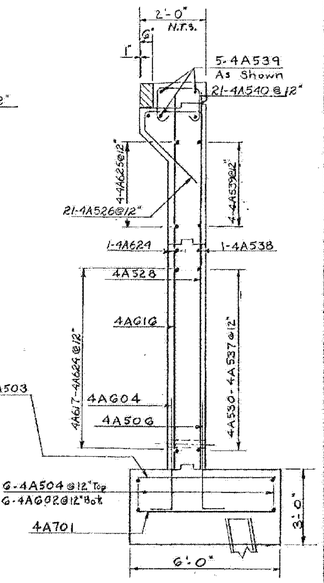

SECTION E-E
SCALE 3/8" = 1'-0"

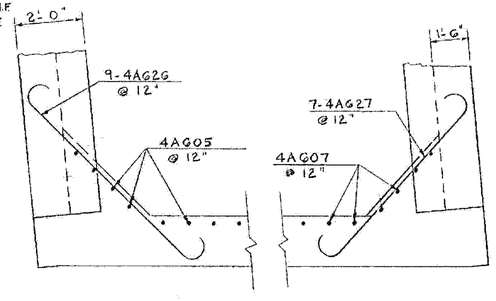

CORNER DETAILS
SCALE 3/8" = 1'-0"

Stage 1 Construction

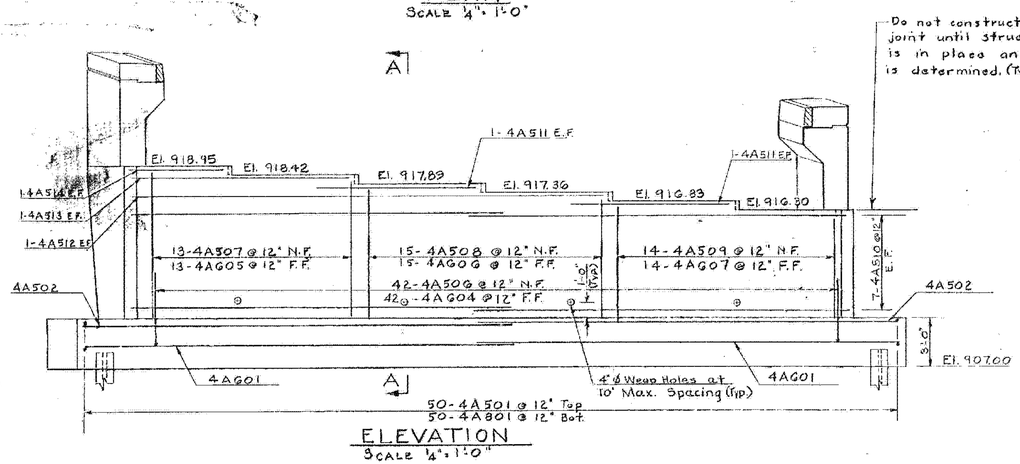

ELEVATION
SCALE 1/4" = 1'-0"

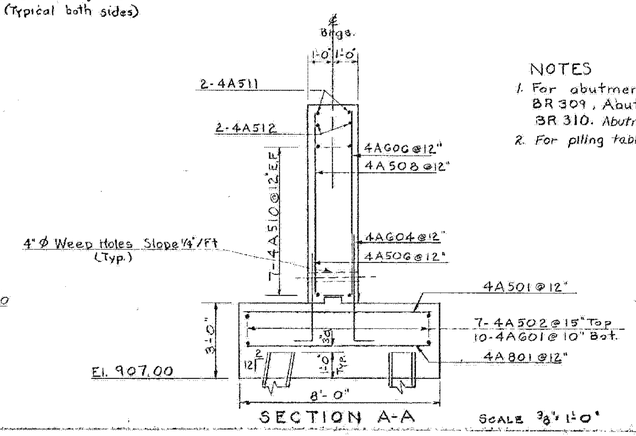

SECTION A-A
SCALE 3/8" = 1'-0"

NOTES
1. For abutment notes see sheet BR 309, Abutment #1 Details and BR 310. Abutment #2 Details.
2. For piling table see sheet BR 304.

BARTON-COVENTRY
IM BPNT (11)
SHEET 35 OF 84
BRIDGES 103N&S
FOR REFERENCE ONLY

STATE OF VERMONT
DEPARTMENT OF HIGHWAYS

PROJECT: BARTON
TOWN OF BARTON
ROUTE NO. I 91 ℄ STA. 2171+99
I 91 OVER S.A. #2
ABUTMENT #4 DETAILS (EXP)
SCALE AS NOTED
SECTION SUPERVISOR: F.W. Bolkum 4/10
DRAWN BY Cunningham / Mossing CHECKED BY Shattuck / Oubellette 4/10
PROJECT NO. I 91-3(11)
SHEET 155 OF 670 BR 312