Note: Curb widths are not drawn to scale

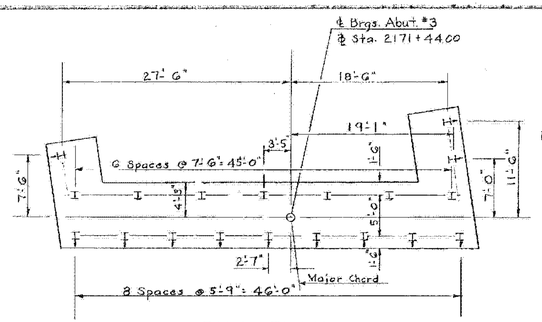

PILE PLAN
SCALE 1/8" = 1'-0"

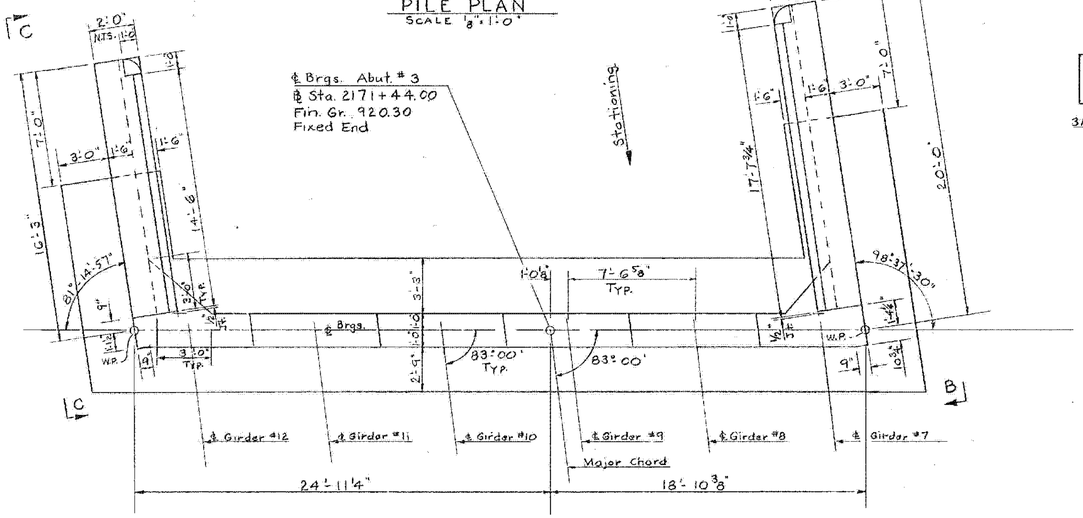

PLAN
SCALE 1/4" = 1'-0"

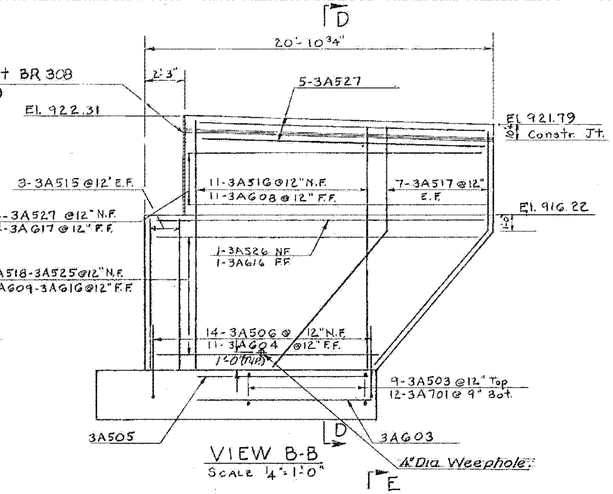

VIEW B-B
SCALE 1/4" = 1'-0"

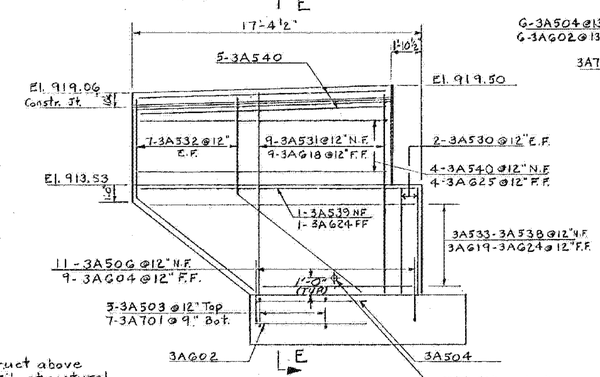

VIEW C-C
SCALE 1/4" = 1'-0"

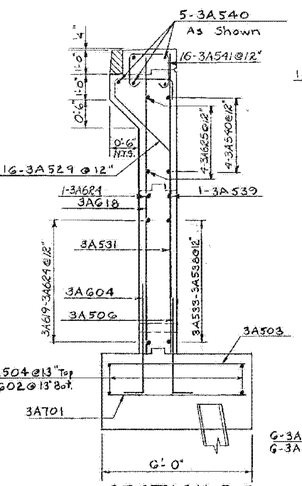

SECTION E-E
SCALE 3/8" = 1'-0"

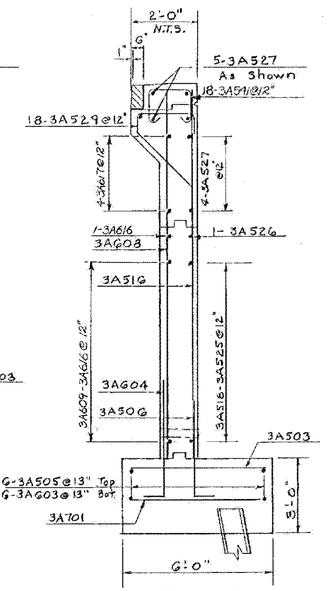

SECTION D-D
SCALE 3/8" = 1'-0"

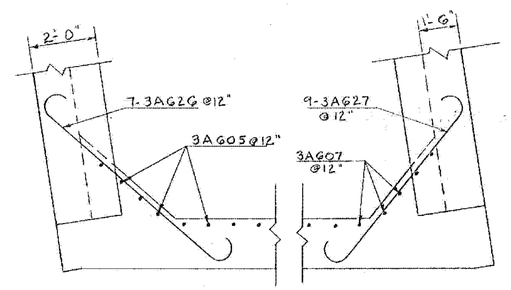

CORNER DETAILS
SCALE 3/8" = 1'-0"

Do not construct above this joint until structural steel is in place and final grade is determined. (Typical both sides.)

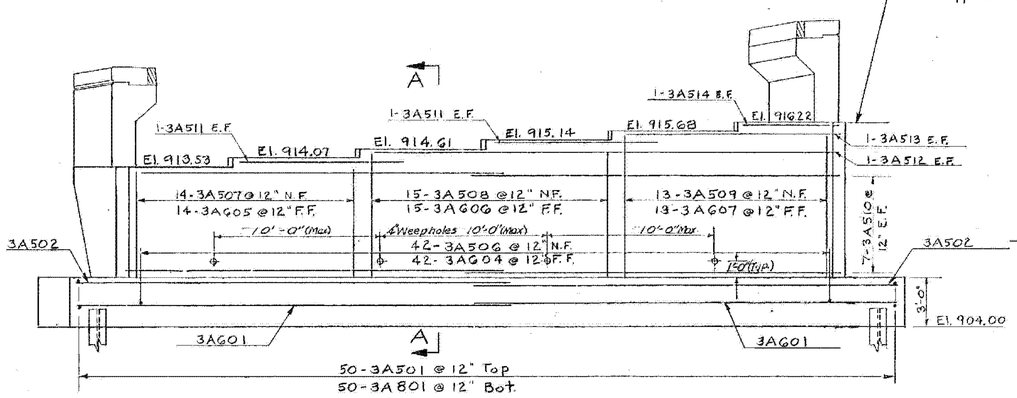

ELEVATION
SCALE 1/4" = 1'-0"

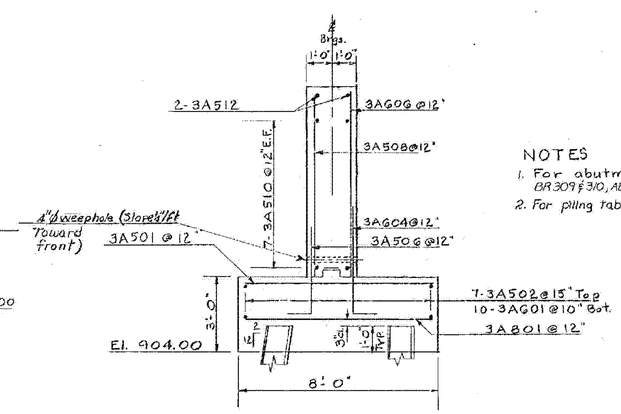

SECTION A-A
SCALE 3/8" = 1'-0"

NOTES
1. For abutment notes see sheets BR 309 & 310, Abutment #1 & 2 Details.
2. For piling table see sheet BR 304.

BARTON-COVENTRY
IM BPNT (11)
SHEET 34 OF 84
BRIDGES 103N&S
FOR REFERENCE ONLY

Stage 1 Construction

STATE OF VERMONT
DEPARTMENT OF HIGHWAYS

PROJECT: BARTON
TOWN OF BARTON
ROUTE NO. I 91 ℄ STA. 2171+99
I 91 OVER S.A. #2
ABUTMENT #3 DETAILS (Fixed)
SCALE AS NOTED
SECTION SUPERVISOR: F.W. Bolkum 4/70
DRAWN BY Cunningham / Fossing CHECKED BY Shattuck / Guelette 4/70
PROJECT NO. I-91-3(11)
SHEET 154 OF 670 BR 3.11