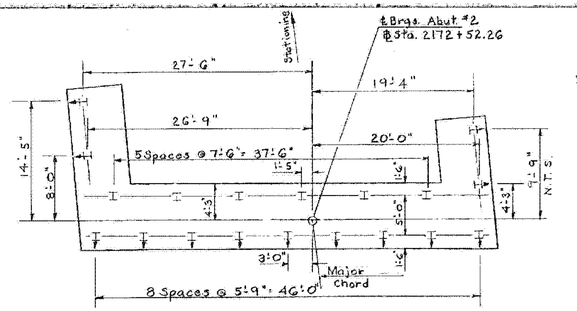

PILE PLAN
SCALE 1/8" = 1'-0"

Note: Estimated length of the Steel Piles (12 BP 53) is 25 ft.

1/2" Expansion Material Item 401.12C. Seal with Item 378, Polyurethane Joint Sealer. For details see sh. BR306 (Typical both wings)

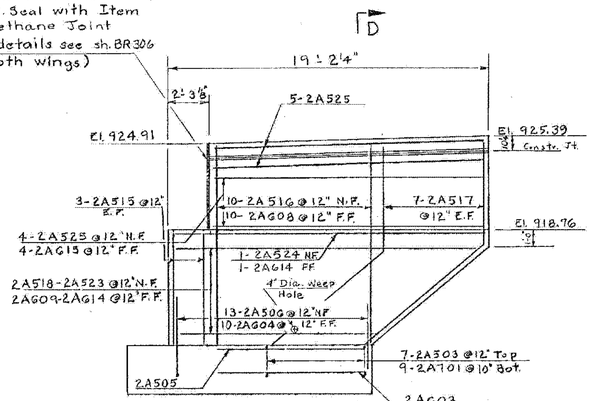

VIEW B-B
SCALE 1/4" = 1'-0"

Note: Curb widths are not drawn to scale

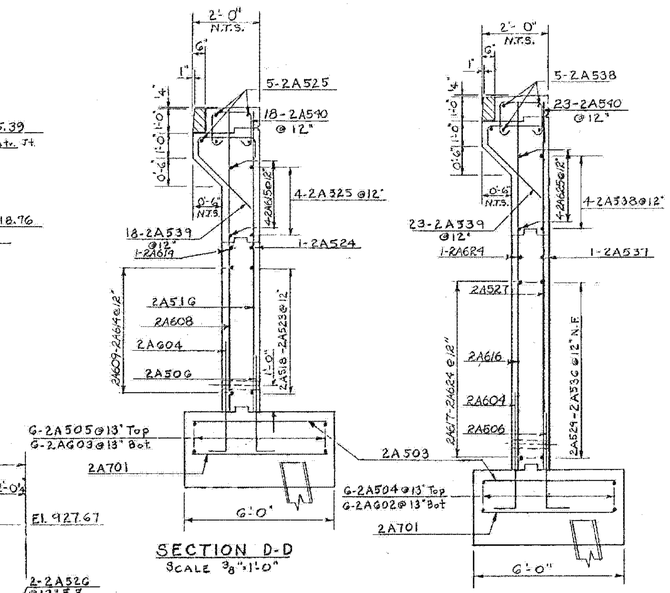

SECTION D-D
SCALE 3/8" = 1'-0"

SECTION E-E
SCALE 3/8" = 1'-0"

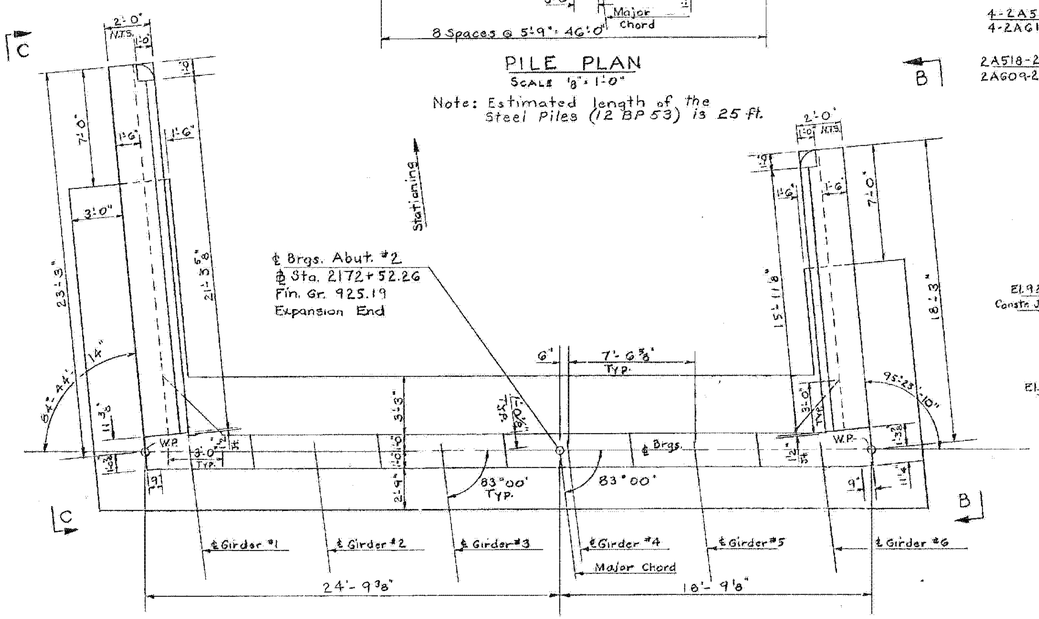

PLAN
SCALE 1/4" = 1'-0"

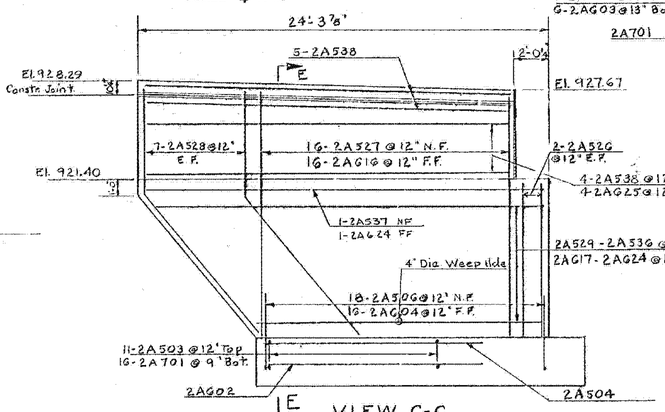

VIEW C-C
SCALE 1/4" = 1'-0"

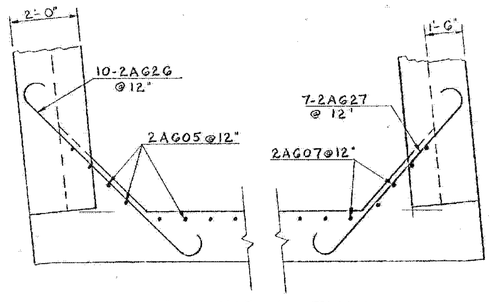

CORNER DETAILS
SCALE 3/8" = 1'-0"

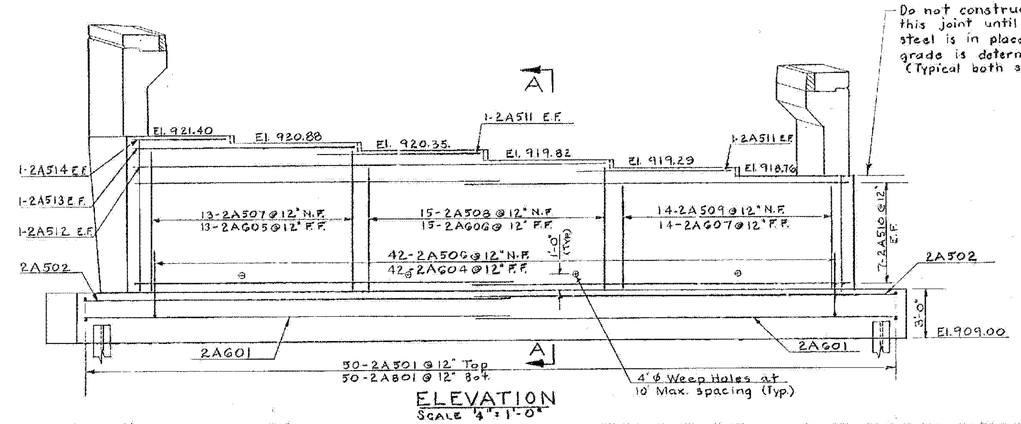

Do not construct above this joint until structural steel is in place and final grade is determined. (Typical both sides)

ELEVATION
SCALE 1/4" = 1'-0"

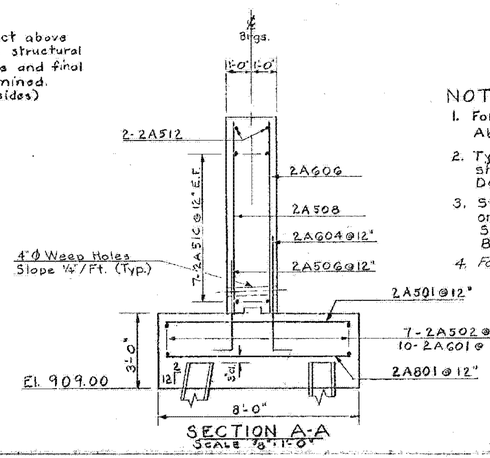

SECTION A-A
SCALE 3/8" = 1'-0"

NOTES

1. For abutment notes see sheet BR309, Abutment #1 Details.
2. Typical construction joint details are shown on BR-313, Approach Slab Details.
3. Steel Pile data is shown in the table on Sheet BR-304, Boring Logs. Splice details are also shown on BR-304.
4. For Treatment of all bridge seats refer to the detail on sheet BR-308 and Note #14 on Std. Dwg. SCB-D1-67

BARTON-COVENTRY
IM BPNT (11)
SHEET 33 OF 84
BRIDGES 103N&S
FOR REFERENCE ONLY

Stage 1 Construction

STATE OF VERMONT
DEPARTMENT OF HIGHWAYS

PROJECT: BARTON-
TOWN OF BARTON
ROUTE NO. I 91 ℄ STA. 2171+99
I 91 OVER S.A. #2
ABUTMENT #2 DETAILS (Exp)
SCALE As Noted
SECTION SUPERVISOR: F.W. Bolkum - 4/70
DRAWN BY CUNNINGHAM CHECKED BY SHATTUCK
& OUELLETTE F.W.B. 4/70
PROJECT NO. I 91-3 (11)
SHEET 153 OF 670 BR 310