Note: Curb widths are not drawn to scale.

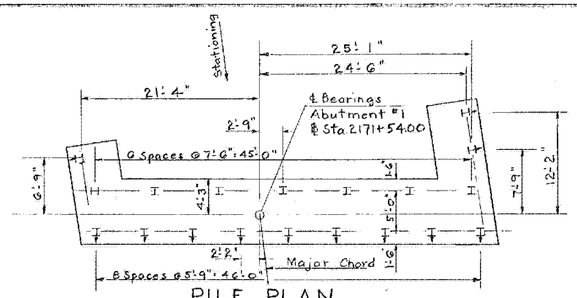

PILE PLAN
SCALE 1/8" = 1'-0"

Note: Estimated Length of the Steel Piles (12 BP53) is 35 ft.

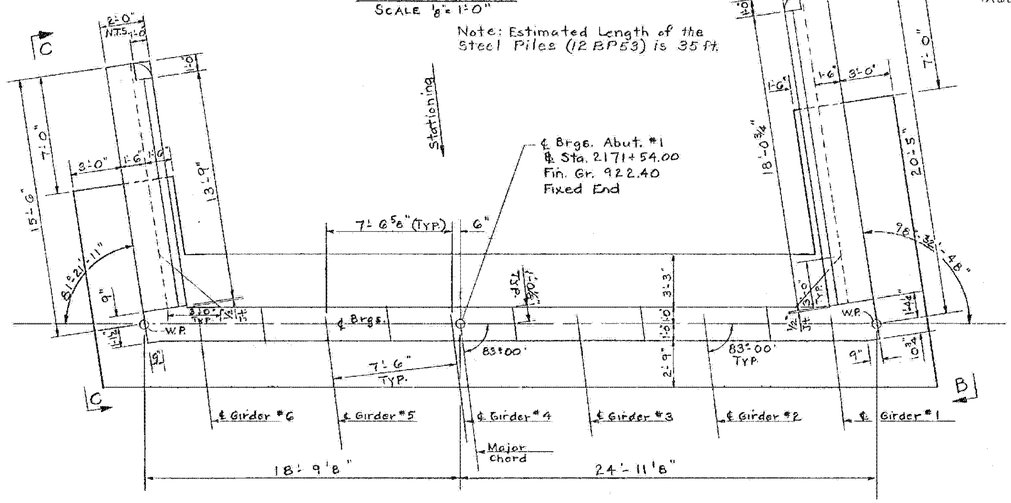

PLAN
SCALE 1/4" = 1'-0"

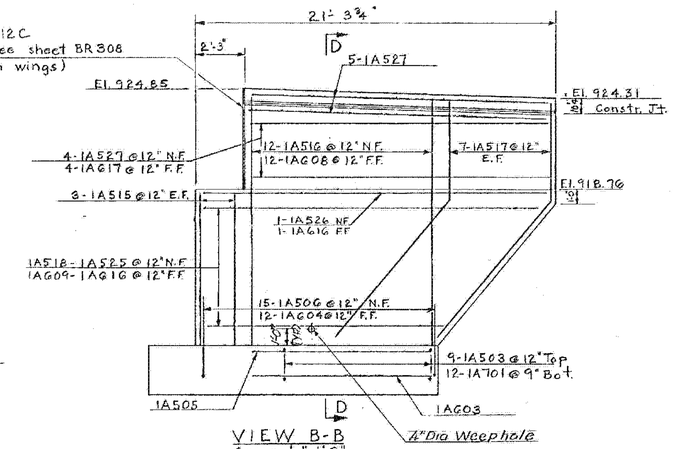

VIEW B-B
SCALE 1/4" = 1'-0"

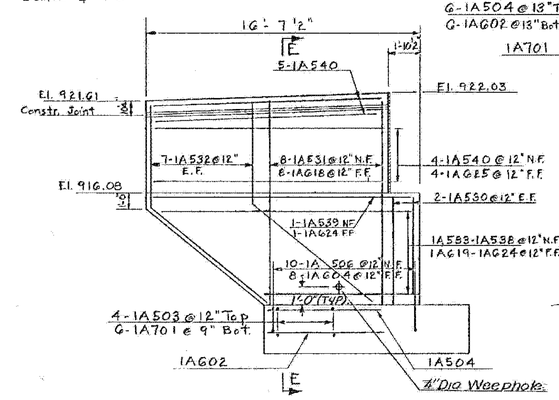

VIEW C-C
SCALE 1/4" = 1'-0"

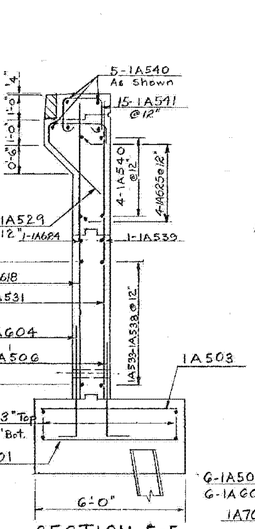

SECTION E-E
SCALE 3/8" = 1'-0"

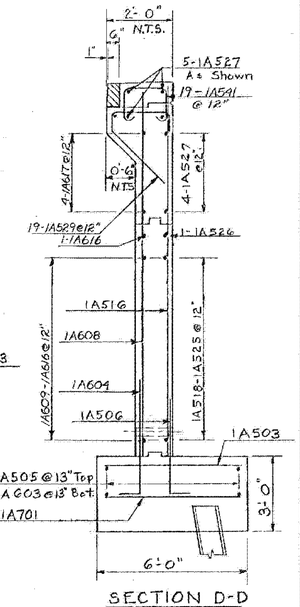

SECTION D-D
SCALE 3/8" = 1'-0"

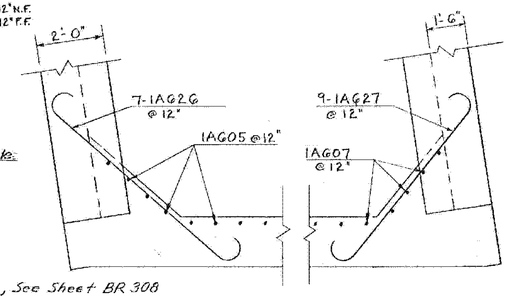

CORNER DETAILS
SCALE 3/8" = 1'-0"

Stage 1 Construction

Do not construct above this joint until structural steel is in place and final grade is determined. (Typical both sides)

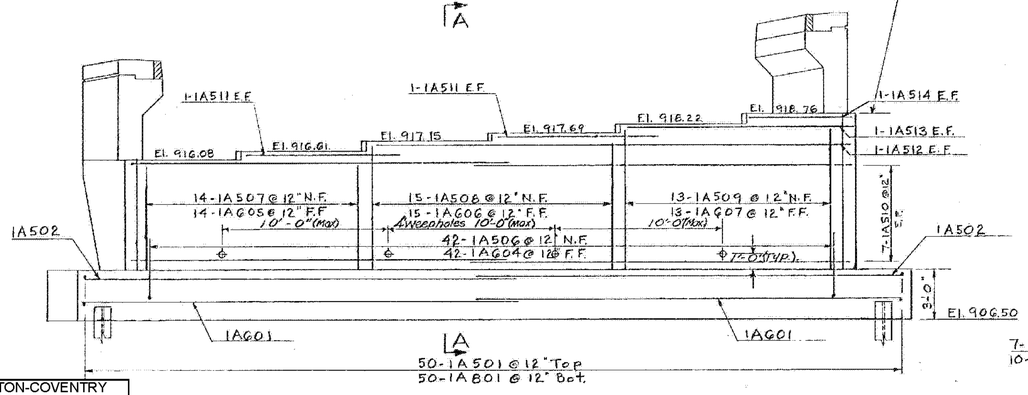

ELEVATION
SCALE 1/4" = 1'-0"

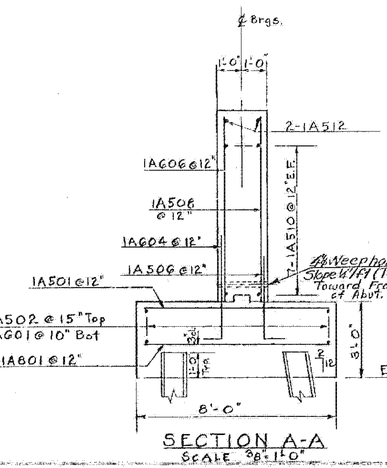

SECTION A-A
SCALE 3/8" = 1'-0"

NOTES

1. For Bridge Seat Treatment, See Sheet BR 308 and Std. Dwg. SCB-D1-67 (Note #14)
2. All reinforcing steel in the abutment footings shall have a 3" cover.
3. N.F. = Near Face, F.F. = Far Face, E.F. = Each Face, N.T.S. = Not to Scale.
4. ⅂ Indicates direction of pile batter, 2 on 12.
5. For General Notes see Sheet BR 301 and Std. Dwg. SCB-D1-67.
6. All concrete in the abutments shall be Concrete Class B, Modified, Item 401-B.
7. Curb and joint details not shown are on Sheets BR 306, BR 307, and BR 308.
8. The maximum steel pile (12BP53) design load under the abutment footings is computed to be 35 tons per pile.
9. For piling table see sheet BR 304.

BARTON-COVENTRY
IM BPNT (11)
SHEET 32 OF 84
BRIDGES 103N&S
FOR REFERENCE ONLY

STATE OF VERMONT
DEPARTMENT OF HIGHWAYS

PROJECT: BARTON-
TOWN OF BARTON
ROUTE NO. I 91 ℄ STA. 2171+99
I91 OVER S.A. #2
ABUTMENT #1 DETAILS (Fixed)
SCALE AS NOTED
SECTION SUPERVISOR: E.W. Bolkum — 1/70
DRAWN BY A. Cunningham & Ouellette CHECKED BY Shattuck & Hoskins 1/70
PROJECT NO. I 91-3(11)
SHEET 152 OF 670 BR 309