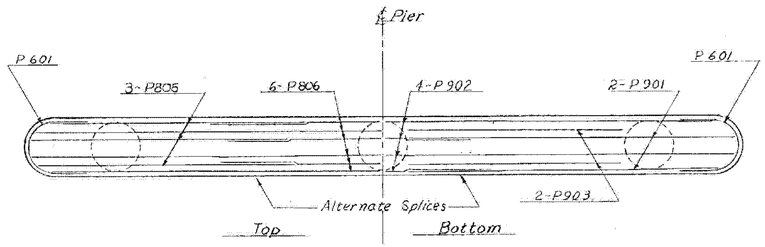

CAP REINFORCING PLAN
Scale: 1/4"=1'-0

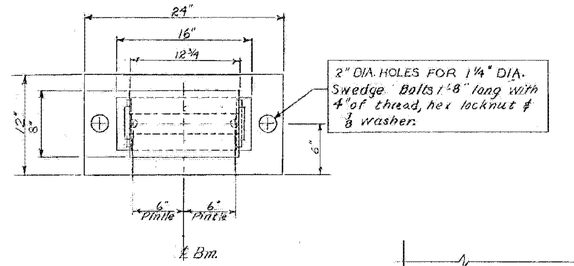

PLAN

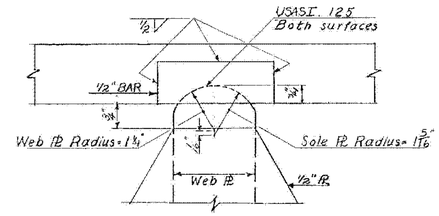

DETAIL A
Scale: NTS

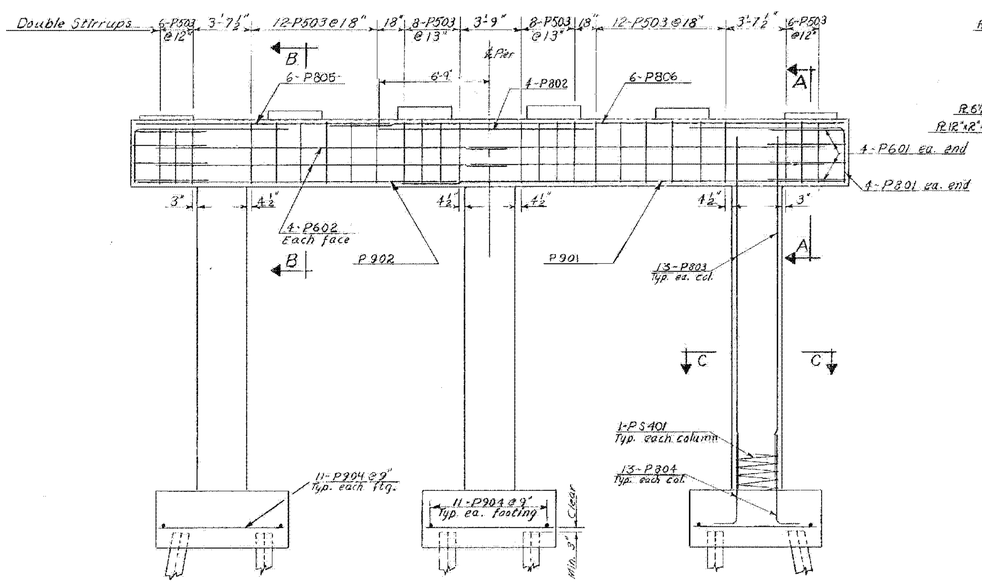

ELEVATION
Scale: 1/4"=1'-0

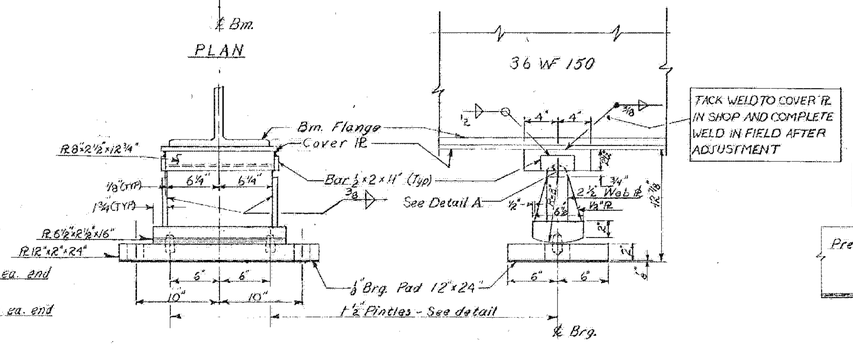

PIER EXPANSION DEVICE
Scale: 1½"=1'-0

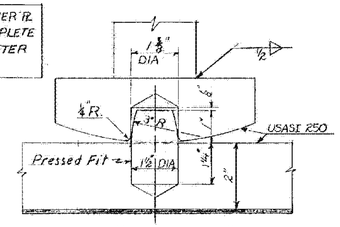

PINTLE DETAIL
Scale: ½"=1"

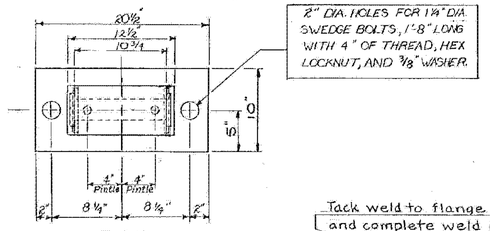

PLAN

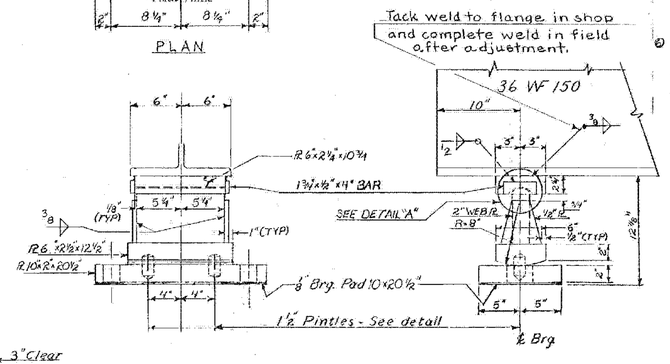

ABUTMENT EXPANSION DEVICE
Scale: 1½"=1'-0

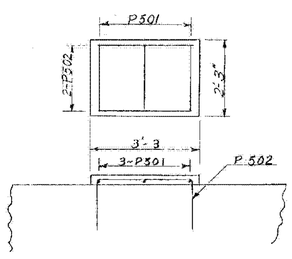

BEARING PAD DETAIL
Scale: ½"=1'-0

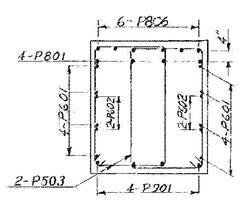

SECTION A-A
Scale: ½"=1'-0

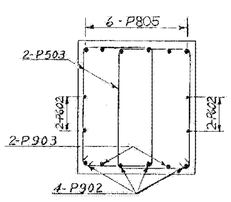

SECTION B-B
Scale: ½"=1'-0

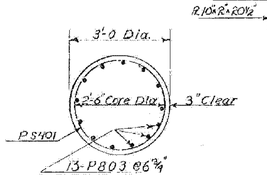

SECTION C-C
Scale: NTS

NOTES

1. FOR GENERAL NOTES SEE SHEET BR 101 AND SCB-D1-67.
2. BEARING DEVICES AT FIXED ENDS (ABUTS. 2 & 4) ARE TO BE AS DETAILED ON SCB-D8-67 EXCEPT PLATE B IN DETAIL (A) ON THIS STD. SHALL BE 9"×1¾"×1'-1".
3. PREFORMED BEARING PADS, ⅛" THICK, CONFORMING TO SPECIFICATION 404.02(23) SHALL BE USED UNDER EACH BEARING OR ROCKER PLATE.
4. ALIGN EXPANSION DEVICES SO THAT ALL ROCKER ARM SHAFTS WILL BE VERTICAL AT 45°F.
5. CONTACT SURFACES OF ROCKERS SHALL BE GIVEN ONE SHOP COAT OF WHITE LEAD & TALLOW. PINTLE HOLES SHALL BE FILLED WITH GRAPHITE AT TIME OF PLACEMENT. REMAINDER OF BEARING SURFACES SHALL BE GIVEN 3 COATS OF PAINT IN ACCORDANCE WITH SPECIFICATION 404.03.
6. FOR TEMPERATURES OTHER THAN 45°, THE ROCKERS SHALL BE SET OUT OF VERTICAL POSITION ACCORDING TO WHETHER THE BEAM IS EXPANDED OR CONTRACTED. THE AMOUNT TO BE SET OUT OF PLUMB IS DETERMINED AS FOLLOWS: LENGTH FROM THE FIXED BEARING X 0.0000065 X NO. OF DEGREES OF CHANGE FROM 45° F.

Stage 1 Construction

BARTON-COVENTRY
IM BPNT (11)
SHEET 24 OF 84
BRIDGES 102N&S
FOR REFERENCE ONLY

STATE OF VERMONT
DEPARTMENT OF HIGHWAYS

PROJECT: BARTON BR102
TOWN OF BARTON
ROUTE No. I-91 ℄ STA. 2148+97
INTERSTATE 91 OVER Vt. #16
PIER REINF. & EXP. BRG. DEVICE DETAILS
SCALE As Noted
SECTION SUPERVISOR: F.W. Bolkum - 4/70
DRAWN BY Wilbur & Elbaxing CHECKED BY Ouellette 3/70
PROJECT No. I-91-3(11)
SHEET 127 OF 670 BR-115