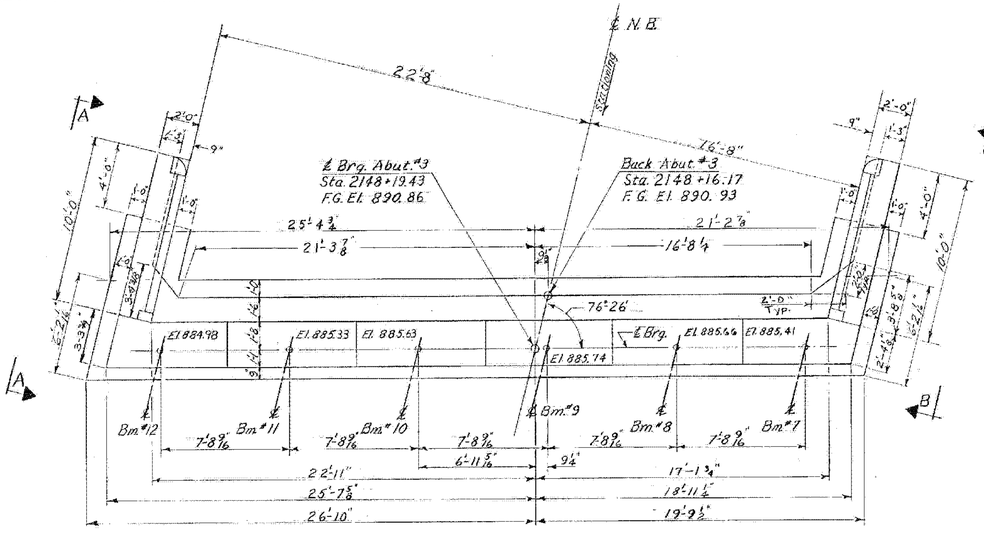

PLAN
Scale: 1/4" = 1'-0"

Do not construct above this joint until structural steel is in place and final grade is determined.

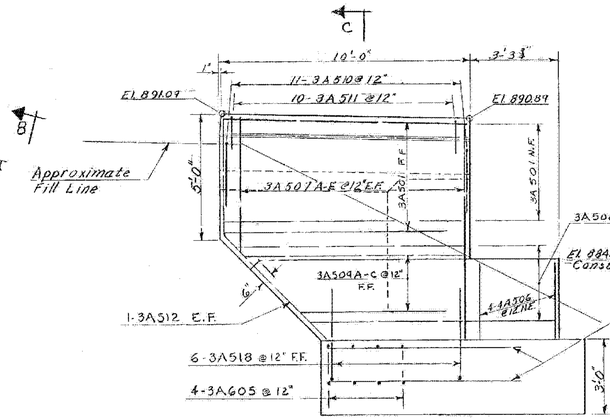

ELEVATION A-A
Scale: 3/8" = 1'-0"

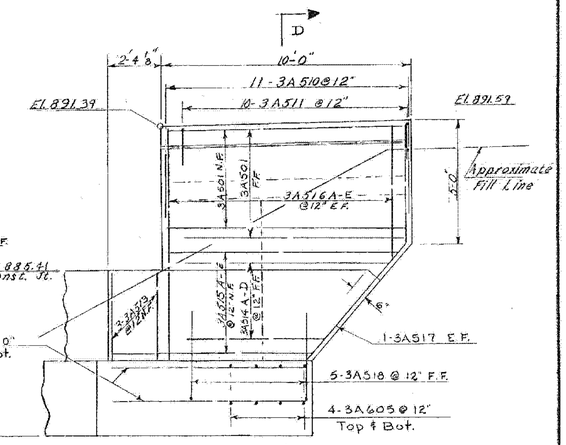

ELEVATION B-B
Scale: 3/8" = 1'-0"

NOTES

1. For general notes see Sheet BR-101. Plan and Elevation & SCB-D1-67.
2. For additional notes see BR-110, Abutment No. 1 Details, and BR-111, Abutment No. 2 Details.
3. For Piling Table see Sheet BR-110

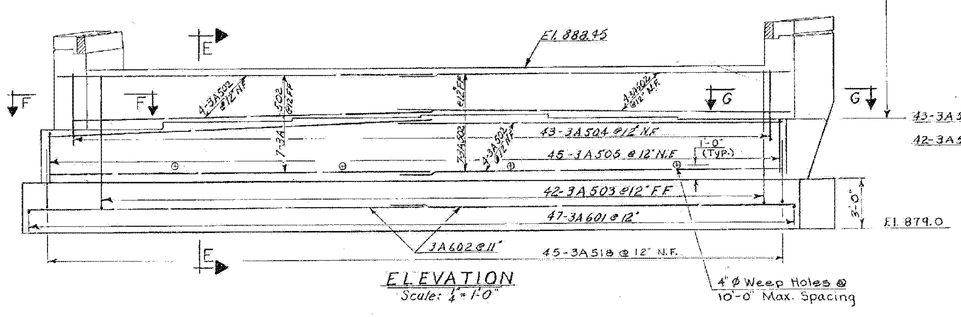

ELEVATION
Scale: 1/4" = 1'-0"

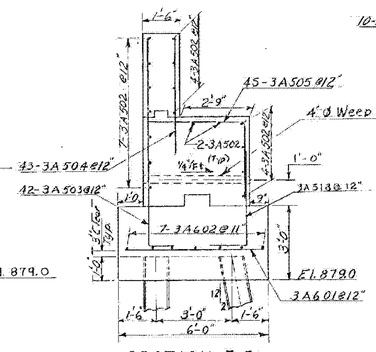

SECTION E-E
Scale: 3/8" = 1'-0

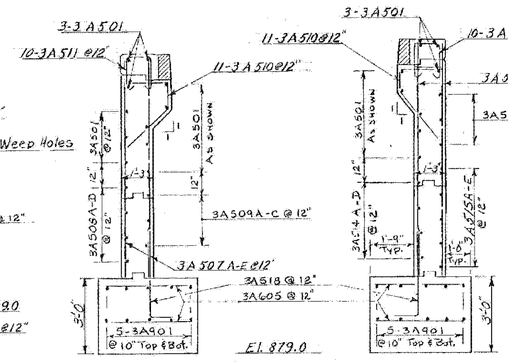

SECTION C-C
Scale: 3/8" = 1'-0"

SECTION D-D
Scale: 3/8" = 1'-0"

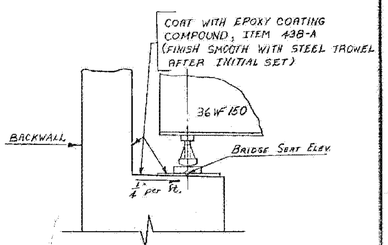

—DETAIL OF BRIDGE SEAT TREATMENT—
EXPANSION ABUTMENTS

(REFER TO NOTE 14 ON STD. DWG. SCB-D1-67 FOR SPECIFICATIONS REGARDING SLOPING OF BRIDGE SEATS)
SCALE: 1/2" = 1'-0

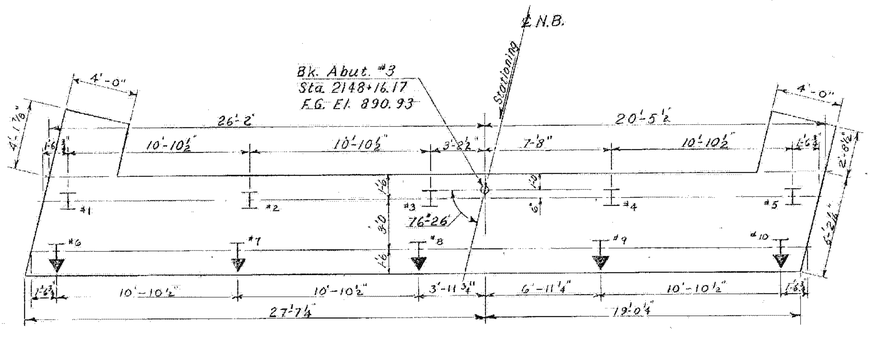

FOOTING PLAN
Scale: 1/4" = 1'-0"

▼ Denotes direction of 2 in 12 Pile Batter
Estimated length of 12 BP 53 Steel H Piles is 60 ft.

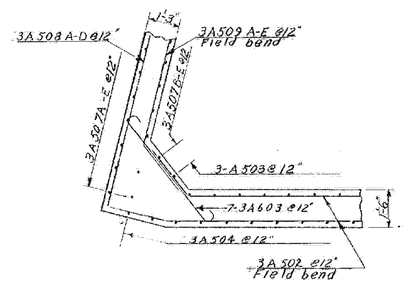

SECTION F-F
Scale: 3/8" = 1'-0"

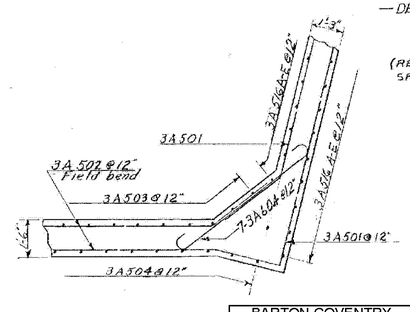

SECTION G-G
Scale: 3/8" = 1'-0"

BARTON-COVENTRY
IM BPNT (11)
SHEET 21 OF 84
BRIDGES 102N&S
FOR REFERENCE ONLY

STATE OF VERMONT
DEPARTMENT OF HIGHWAYS

PROJECT: BARTON
TOWN OF BARTON BR 102
ROUTE No. I-91 ℄ STA. 2148+97
INTERSTATE 91 OVER VT #16
ABUTMENT No. 3 DETAILS (EXP)
SCALE As Noted
SECTION SUPERVISOR: F.W. Balkum — 4/70
DRAWN BY Vaillancourt CHECKED BY Hosking & Ouellette
PROJECT No. I-91-3 (11)
SHEET 124 OF 670 BR. 112

BR 8