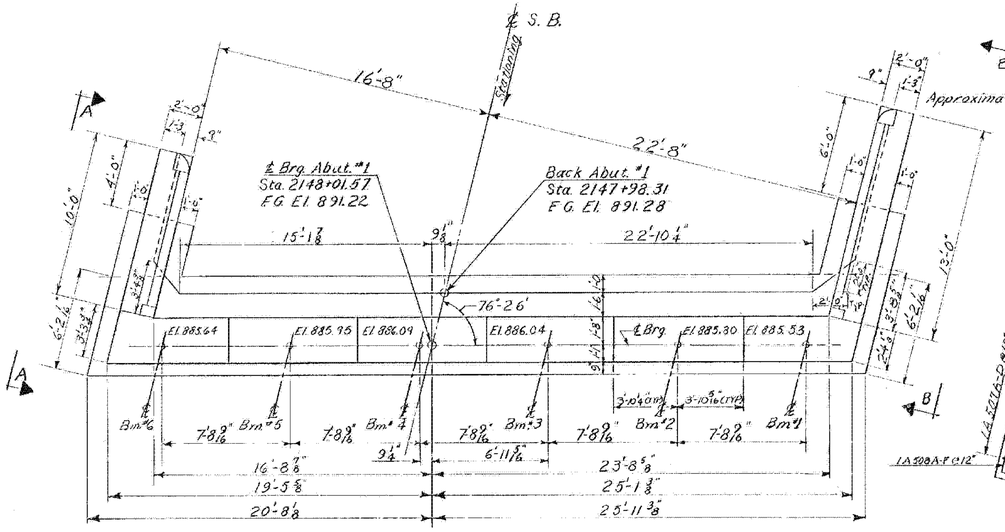

PLAN
Scale: 1/4" = 1'-0

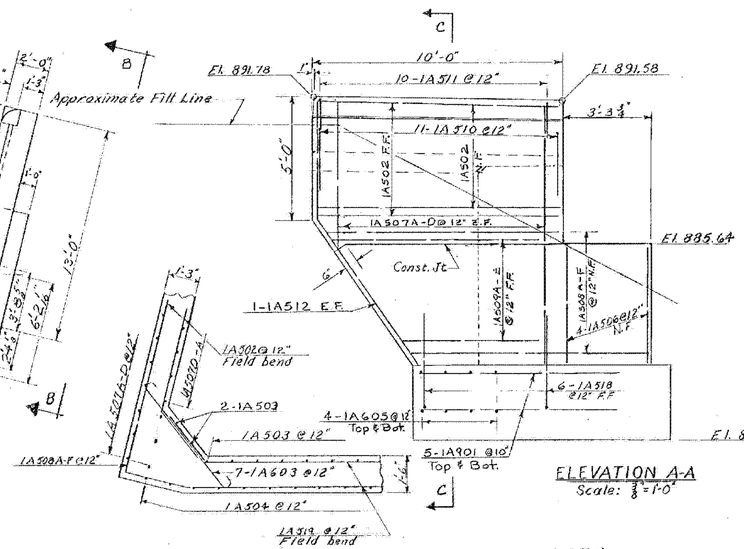

ELEVATION A-A
Scale: 3/8" = 1'-0"

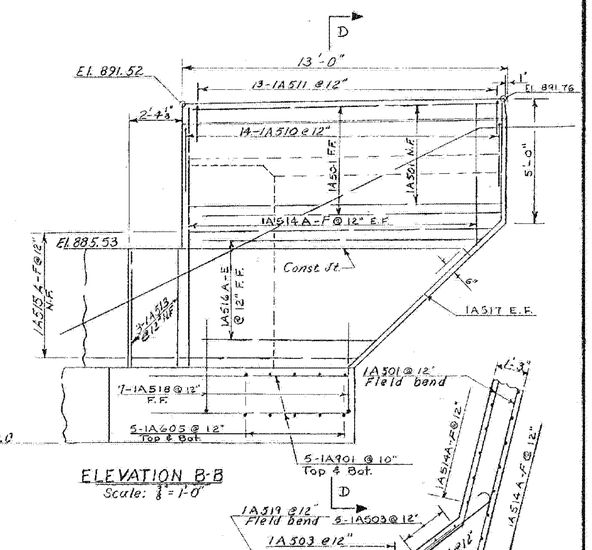

ELEVATION B-B
Scale: 3/8" = 1'-0"

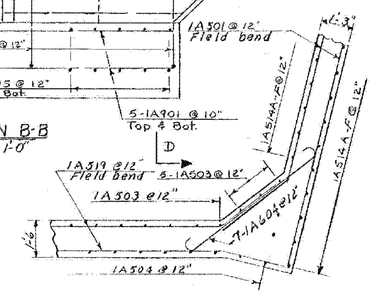

SECTION G-G
Scale: 3/8" = 1'-0"

Do not construct above this joint until structural steel is in place and final grade is determined. (Typ. both wings)

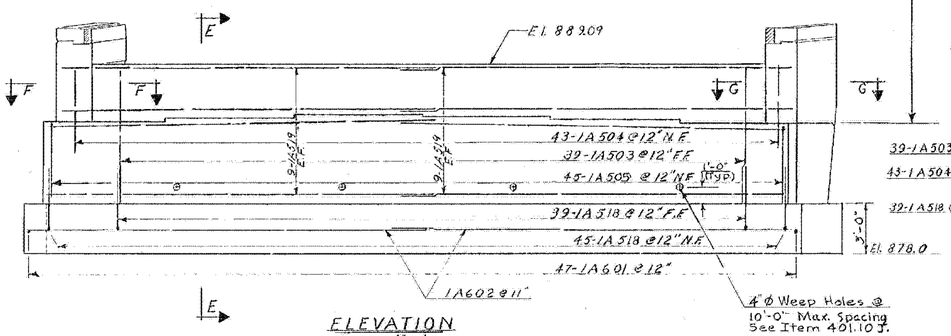

ELEVATION
Scale: 1/4" = 1'-0

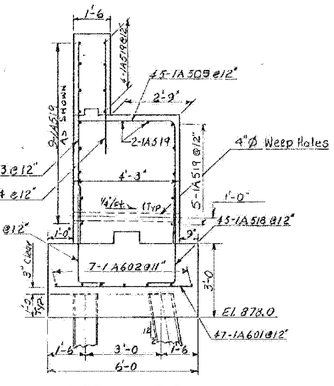

SECTION E-E
Scale: 3/8" = 1'-0"

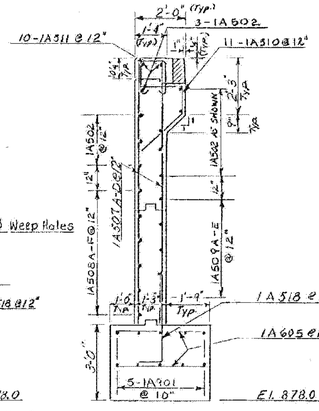

SECTION C-C
Scale: 3/8" = 1'-0"

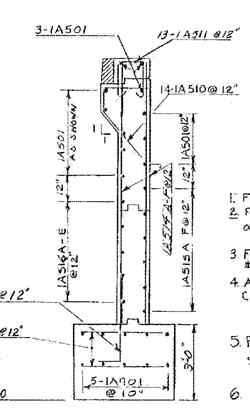

SECTION D-D
Scale: 3/8" = 1'-0"

NOTES

1. For general notes see Sheet BR 101, Plan and Elevation.
2. For details of surface treatment on Expans. Abut. bridge seats and backwalls see sheet BR 112.
3. For details of Expansion Dam at Abutment #1 and #3 see Sheet BR 108, Expansion Dam Details.
4. All concrete in the abutments shall be Concrete Class B, Mod.
5. For curb details and horizontal score mark details see Sheet BR 106, Superstructure Details.
6. N.F. denotes Near Face.
   F.F. denotes Far Face.
   E.F. denotes Each Face
   N.T.S. denotes Not to Scale
7. The maximum steel pile (12BP53) design load under the abutment footings is computed to be 58 tons per pile.
8. Details of the cast-in-place, 1" ϕ threaded rods in the expansion joint assembly and the A5508 dowels cast-in-place in the backwall are shown on Sheet BR-108, Expansion Dam Details.

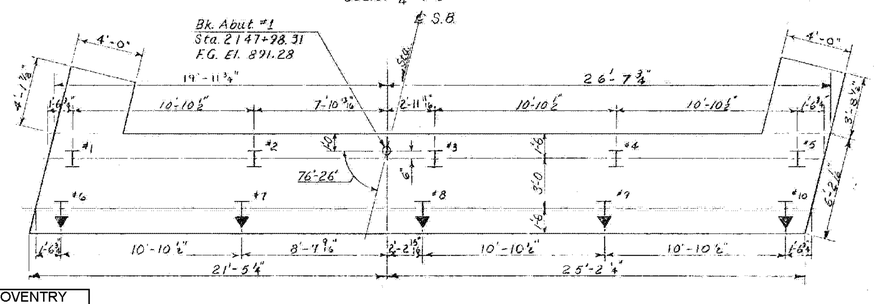

FOOTING PLAN
Scale: 1/4" = 1'-0

Location	Number of Piles	Size	Est. Length of Piles	Splices allowed for piles not exceeding plan length. (To be paid for only if used)	Splices estimated for piles exceeding plan length. (To be paid for only if used)
Abut. #1	10	12BP53	45'	0	2
Abut. #2	10	12BP53	50	0	2
Abut. #3	10	12BP53	60	0	2
Abut. #4	10	12BP53	60	0	2
Pier #1	4	12BP53	30	0	1
Pier #2	4	12BP53	35	0	1
Pier #3	4	12BP53	35	0	1
Pier #4	4	12BP53	35	0	1

Estimated length of 12BP53 H-Pile is 45'
▼ Denotes 2 in 12 Pile batter direction.

Stage 1 Construction

STATE OF VERMONT
DEPARTMENT OF HIGHWAYS

PROJECT: BARTON
TOWN OF BARTON BR 102
ROUTE NO. I-91 ℄ STA. 2148+97
INTERSTATE 91 OVER VT. # 16
ABUTMENT No. 1 DETAILS (EXP)
SCALE As Noted
SECTION SUPERVISOR: F.W. Balkum - 4/70
DRAWN BY Williaume & Ouellette CHECKED BY Hosking 3/70
PROJECT NO. I-91-3(11)
SHEET 122 OF 670 BR 110

BARTON-COVENTRY
IM BPNT (11)
SHEET 19 OF 84
BRIDGES 102N&S
FOR REFERENCE ONLY