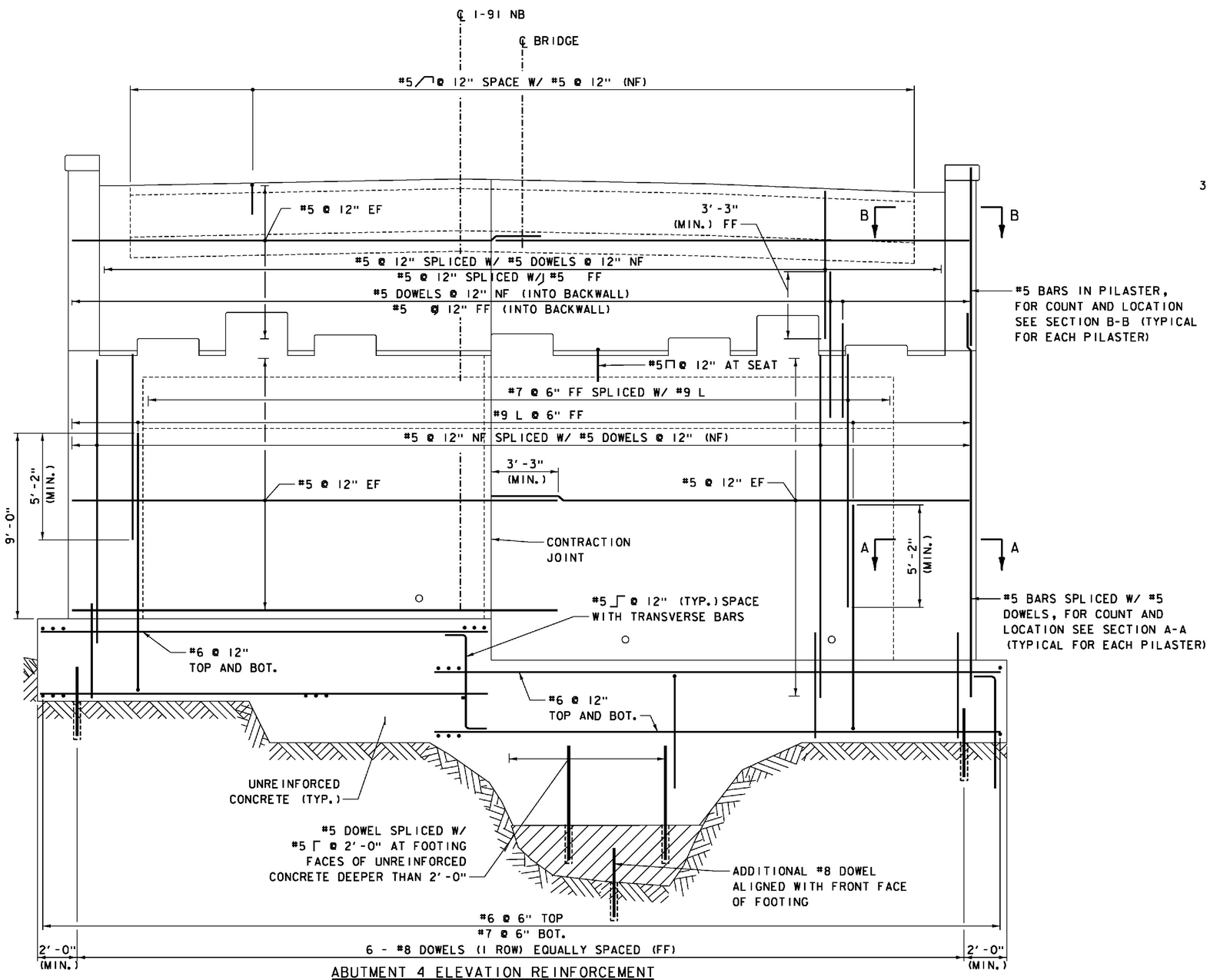

ABUTMENT 4 ELEVATION REINFORCEMENT

SCALE 3/8" = 1'-0"

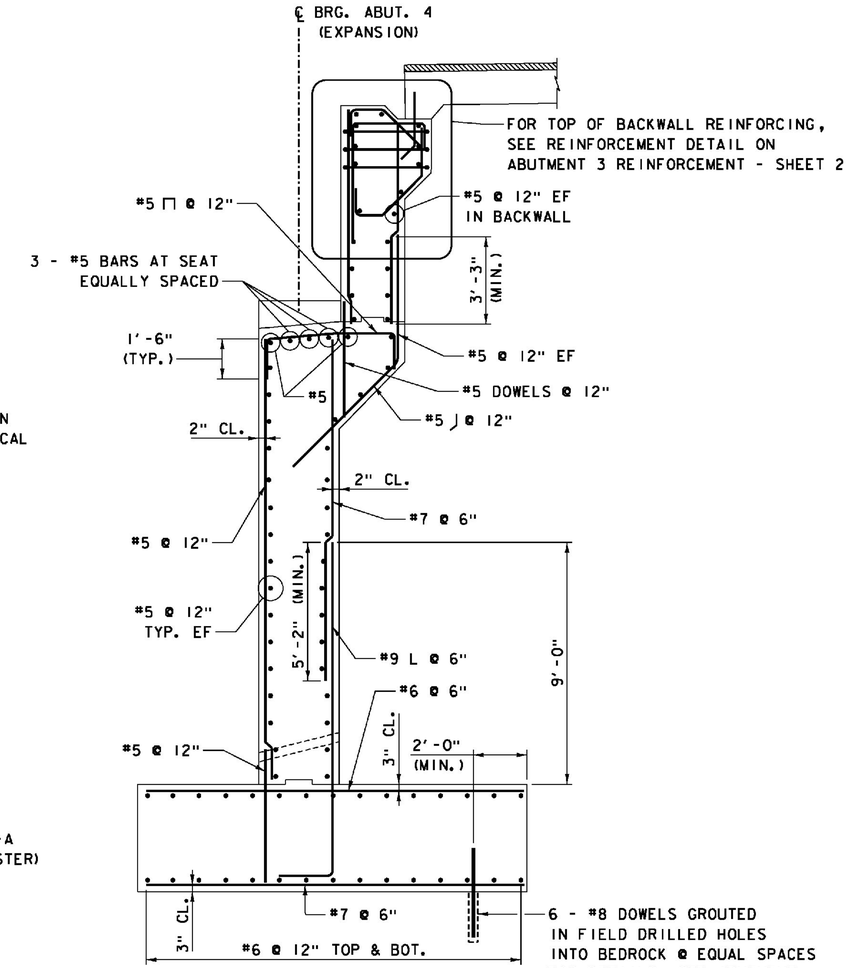

ABUTMENT 4 SECTION REINFORCEMENT

SCALE 3/8" = 1'-0"

NOTES:

1. FOR SUBSTRUCTURE NOTES, SEE ABUTMENT 3 PLAN SHEET.
2. FOR REINFORCEMENT IN ABUTMENT PEDESTALS, SEE ABUTMENT DETAILS - SHEET 1.
3. FOR KEEPER BLOCK REINFORCING, SEE ABUTMENT DETAILS - SHEET 2
4. FOR SECTION A-A AND SECTION B-B PILASTER REINFORCING DETAILS, SEE ABUTMENT DETAILS - SHEET 3.

LEGEND
NF = NEAR FACE
FF = FAR FACE
EF = EACH FACE

ITEMS USED ON THIS SHEET

ITEM NO.	DESCRIPTION
501.33	CONCRETE, HIGH PERFORMANCE CLASS A
501.34	CONCRETE, HIGH PERFORMANCE CLASS B
507.15	REINFORCING STEEL
507.16	DRILLING AND GROUTING DOWELS
507.17	EPOXY COATED REINFORCING STEEL

PROJECT NAME: WINDSOR
PROJECT NUMBER: IM 091-1(64)

FILE NAME: z10a188Abut4RES.dgn
PROJECT LEADER: J. WILSON
DESIGNED BY: S. BOYINGTON
ABUT. 4 REINFORCEMENT - SHEET 2

PLOT DATE: 7/30/2015
DRAWN BY: S. GUNN
CHECKED BY: S. HALLORAN
SHEET 131 OF 156